NOT FOR BID

SAN BERNARDINO COUNTY

SAN BERNANDINO COUNTY
PROJECT AND FACILITIES
MANAGEMENT DEPARTMENT

385 NORTH ARROWHEAD AVENUE, 3RD FLOOR
SAN BERNARDINO, CA 92415-0184\

IDS

IDS GROUP

1 PETERS CANYON ROAD, SUITE 130
IRVINE, CA. 92606
TEL: 949-387-8500, FAX: 949-387-0800

REPLACEMENT DEAERATOR

400 N PEPPER AVE, COLTON, CA 92324

A PROJECT FOR: ARROWHEAD REGIONAL MEDICAL CENTER | PROJECT NUMBER: WBSE# 10.10.0847, CIP# 20-011, IDS# 22X066.02

S230562-36-00 HCAI BC 2 SUBMITTAL | JUNE 28, 2023

7/24/2023 9:27:16 AM C:\Users\chris.corbett\Documents\22X066.02_ARCH_R20_chris.corbettRXSMS.rvt

G-000 COVER

SAN BERNARDINO COUNTY
ARROWHEAD REGIONAL MEDICAL CENTER
REPLACEMENT DEAERATOR 1

ABBREVIATIONS

AFF	ABOVE FINISHED FLOOR
ACST	ACOUSTIC
ACT	ACOUSTIC CEILING TILE
APC	ACOUSTIC PANEL CEILING
AWP	ACOUSTIC WALL PANEL
AWT	ACOUSTIC WALL TREATMENT
ADJ	ADJUSTABLE
A/C	AIR CONDITIONING
AHU	AIR HANDLING UNIT
ALT.	ALTERNATE
AL	ALUMINUM
AB	ANCHOR BOLT
APPROX.	APPROXIMATE
ARCH	ARHICTECT
ASPH	ASPHALT
ASSY	ASSEMBLY
AUTO	AUTOMATIC
AWN	AWNING
A/V	AUDIO-VISUAL
B	BASEMENT
BALC	BALCONY
BATH	BATHROOM
BM	BEAM
BR	BEDROOM
BMRK	BENCHMARK
BLK	BLOCK/BLOCKING
BD	BOARD
BKSH	BOOKSHELVES
BOT	BOTTOM
BRKT	BRACKET
BC	BROOM CLOSET
BLDG	BUILDING
BLT-IN	BUILT IN
BUR	BUILT-UP ROOFING
BOS	BOTTOM OF SLAB
CF/CI	CONTRACTOR FURNISHED / CONTRACTOR INSTALLED
CA	CLEAR ANONDIZED
CAB	CABINET
CPT	CARPET
CSMT	CASEMENT
CI	CAST IRON
CB	CATCH BASIN
CLG	CEILING
CEM	CEMENT
CL	CENTER LINE
CER	CERAMIC
CT	CERAMIC TILE
CO	CLEAN OUT
CLR	CLEAR
COL	COLUMN
CBP	COMPOSITE BUILDING PANEL
CONC	CONCRETE
CMU	CONCRETE MASONRY UNIT
CONST	CONSTRUCTION
CONT	CONTINUOUS
CONTR	CONTRACTOR
CJ	CONTROL JOINT
COP	COPPER
CG	CORNER GUARD
CORR	CORRIDOR
CTR	COUNTER
CSMS	COUNTERSUNK METAL SCREW
CSWS	COUNTERSUNK WOOD SCREW
CRS	COURSES
CC	CUBICLE CURTAIN
CM	CENTIMETER
DL	DEAD LOAD
DE	DUAL EGRESS
DEMO	DEMOLISH / DEMOLITION
DET	DETAIL
DIA	DIAMETER
DIFF	DIFFUSER
DIM	DIMENSION
DO	DITTO
DR	DOOR
DH	DOUBLE HUNG
DN	DOWN
DS	DOWN SPOUT
D	DRAIN
DWR	DRAWER
DWG	DRAWING
DF	DRINKING FOUNTAIN
DUP	DUPLICATOR
DOP	DISPERSED OIL PARTICULATE
(E)	EXISTING
EXIST	EXISTING
ETR	EXISTING TO REMAIN
EA	EACH
E	EAST
EQ	EQUAL
EQPT	EQUIPMENT
EWC	ELECTRIC WATER COOLER
ELEC	ELECTRICAL
ELEV	ELEVATOR
EMERG	EMEGENCY
EG	END GUARD
ENGR	ENGINEER
EQUIP	EQUIPMENT
EQPT	EQUIPMENT
EXP	EXPANSION
EB	EXPANSION BOLT
EJ	EXPANSION JOINT
EXPC	EXPOSED CONSTRUCTION
EXT	EXTERIOR
EIFS	EXTERIOR INSULATION AND FINISH SYSTEM
FF	FINISH FLOOR
FWC	FABRIC WALL COVERING
FWS	FABRIC WALL SYSTEM
FT	FEET / FOOT
FG	FINISH GRADE
FV	FIELD VERIFY
FIN	FINISH
FDV	FIRE DEPARTMENT VALVE
FE	FIRE EXTINGUISHER
FEC	FIRE EXTINGUISHER CABINET
FHC	FIRE HOSE CABINET
FP	FIRE PROOFING
FRP	FIBERGLASS REINFORCED PANEL
FIX	FIXTURE
FLASH	FLASHING
FLEX	FLEXIBLE
FL	FLOOR
FD	FLOOR DRAIN
FS	FLOOR SINK
FLUOR	FLUORESCENT
FTG	FOOTING
FDN	FOUNDATION
FRMG	FRAMING
FURN	FURNACE
FTDF	FIRE TREATED DOUGLAS FIR
FOF	FACE OF FINISH
FOS	FACE OF STUD
FLS	FIRE LIFE SAFETY
GA	GAGE
GALV	GALVANIZED
GI	GALVONIZED IRON
GEN	GENERATOR
GL	GLASS
GLB	GLASS BLOCK
GB	GRAB BAR
GR	GRADE
GT	GRANITE TILE
GFI	GROUND FAULT CIRCUIT INTERRUPT
GUTT	GUTTER
GYP	GYPSUM
GYP BD	GYPSUM BOARD
HR	HAND RAIL
HDW	HARDWIRE
HD WD	HARDWOOD
HD	HEAD
HVAC	HEATING, VENTILATING, AND AIR CONDITIONING
HT	HEIGHT
HPAC	HIGH PERMORMANCE ARHICTECTURAL COATING
HP	HIGH POINT
HC	HOLLOW CORE
HM	HOLLOW METAL
HORZ	HORIZONTAL
HB	HOSE BIBB
HOSP	HOSPITAL
HC	HOT AND COLD
HO	HOLD-OPEN
HSS	HOLLOW STEEL SECTION
IN	INCH / INCHES
INFO	INFORMATION
ID	INSIDE DIAMETER
INS	INSULATED
INSUL	INSULATION
IR	INTEGRAL RESILIENT BASE
INT	INTERIOR
ILSM	INTERIM LIFE SAFETY MEASURE
JAN	JANITOR
JT	JOINT
JST	JOIST
KG	KILOGRAM
KD	KNOCK-DOWN FRAME
LL	LIVE LOAD
LAB	LABORATORY
LAV	LAVATORY
LAM	LAMINATE
LC	LAUNDRY CHUTE
LT	LIGHT
LTWT	LIGHT WEIGHT
LB	POUNDS
LIN. DIFF.	LINEAR DIFFUSER
LP	LOW POINT
LLV	LONG LEG VERTICAL
LVT	LUXURY VINYL TILE
M	METER
MM	MILLIMETER
MACH	MACHINE
MAT	MATERIAL
MH	MANHOLE
MFD	MANUFACTURED
MFR	MANUFACTURER
MT	MARBLE TILE
MK	MARK
MB	MARKER BOARD
MO	MASONRY OPENING
MAX	MAXIMUM
MIN	MINIMUM
MECH	MECHANICAL
MC	MEDICINE CHEST
MEMB	MEMBRANE
MTL	METAL
MFTSM	MINERAL-FILLED THERMOPLASTIC SURFACING MATERIAL
MDF	MEDIUM DENSITY FIBERBOARD
MHO	MAGNETIC HOLD-OPEN
MISC	MISCELLANEOUS
MOD	MODIFIED
MLDG	MOLDING
(N)	NEW
N	NORTH
N/A	NOT APPLICABLE
NF	NATURAL FINISH
NOM	NOMINAL
NIC	NOT IN CONTRACT
NTS	NOT TO SCALE
NO.	NUMBER
OF/OI	OWNER FURNISHED / OWNER INSTALLED
OF/CI	OWNER FURNISHED / CONTRACOTR INSTALLED
OFF	OFFICE
OC	ON CENTER
OA	OUTSIDE AIR
OPP	OPPOSITE
OH	OPPOSITE HAND
ORCH	ORCHESTRA
OP	ORNAMENTAL PAINT
OPL	ORNAMENTAL PLASTER
OD	OUTSIDE DIAMETER
P	PAINT
PL	PLATE
PNL	PANEL
PLAM	PLASTIC LAMINATE
PTC	PEDESTRIAN TRAFFIC COATING
PSF	POUNDS PER SQUARE FOOT
PSI	POUNDS PER SQUARE INCH
PREFAB	PREFABRICATED
PERF	PERFORATED
PLUMB	PLUMBING
QTY	QUANTITY
QT	QUARRY TILE
RAD	RADIUS
RDWD	REDWOOD
REF	REFRIGERATOR
REINF	REINFORCED
REBAR	REINFORCING BAR
REV	REVISION
RO	ROUGH OPENING
RM	ROOM
RA	RETURN AIR
RD	ROOF DRAIN
RS	RESILIENT SHEET FLOORING
REQ	REQUIRED
SS	STAINLESS STEEL
SMS	SHEET METAL SCREW
SC	SOLID CORE
SCH	SCHEDULE
SECT	SECTION
SHTHG	SHEATHING
SHT	SHEET
SLV	SHORT LEG VERTICAL
SPR	SINGLE PLY ROOFING
SL GL DR	SLIDING GLASS DOOR
SP	SOLID POLYMER
SAP	SOUND ABSORTIVE PANEL
SPECS	SPECIFICATIONS
SQ	SQUARE
SQ FT	SQUARE FEET
S&V	STAIN AND VARNISH
STD	STANDARD
STL	STEEL
STLC	STEEL CHANNEL
SEJ	SEISMIC JOINT
SJ	STEEL JOIST
STOR	STORAGE
STRUCT	STRUCTURAL
SUSP	SUSPENDED
SW	SWITCH
$	SWITCH
S	SOUTH
SYM	SYMMETRICAL
SIM	SIMILAR
TBD	TO BE DETERMINED
TB	TACKBOARD
TELE	TELEPHONE
TV	TELEVISION
TG	TEMPERED GLASS
TEMP	TEMPORARY
TLT	TOILET
TOS	TOP OF SLAB
TO	TOP OF
TYP	TYPICAL
U/S	UNDERSIDE
UC	UNDER CABINET
UNFIN	UNFINISHED
U.N.O.	UNLESS NOTED OTHERWISE
VF/VI	VENDOR FURNISHED / VENDOR INSTALLED
VF/CI	VENDOR FURNISHED / CONTRACTOR INSTALLED
VAC	VACUUM
VB	VAPOR BARRIER
VERT	VERTICAL
VIF	VERIFY IN FIELD
VEST	VESTIBULE
VCT	VINYL COMPOSITION TILE
VWC	VINYL WALL COVERING
W/	WITH
W/O	WITHOUT
WC	WASH CLOSET
WD	WOOD
WT	WEIGHT
WP	WATER PROOF
WRB	WATER RESISTANT CEMENT BOARD
WWF	WELDED WIRE FRAME
WWM	WELDED WIRE MESH
WF	WIDE FLANGE
W	WEST
WD	WOOD
YD	YARD

VICINITY MAP

FACILITY MAP

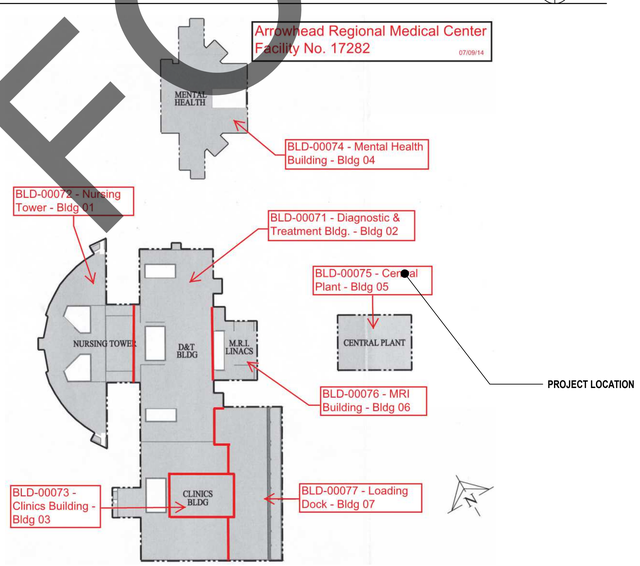

OWNER

SAN BERNARDINO PROJECT AND FACILITY MANAGEMENT
385 NORTH ARROWHEAD AVENUE,
3RD FLOOR SAN BERNARDINO,
CA 92415-0184

NICHOLAS HO, PROJECT MANAGER
PHONE: 909 387-5000
EMAIL: Nicholas.Ho@res.sbcounty.gov

DESIGN TEAM

AOR
JOSEPH MACDONALD
IDS GROUP INC.
1 PETERS CANYON ROAD, SUITE 130
IRVINE, CALIFORNIA 92606
PHONE: 949-387-8500 EXT 157

SEOR
RAMI ELHASSAN
IDS GROUP INC.
1 PETERS CANYON ROAD, SUITE 130
IRVINE, CALIFORNIA 92606
PHONE: 949-387-8500 EXT 113

MEOR
DARREN SMITH
IDS GROUP INC.
1 PETERS CANYON ROAD, SUITE 130
IRVINE, CALIFORNIA 92606
PHONE: 949-387-8500 EXT 434

EEOR
MANNY OCAMPO
IDS GROUP INC.
1 PETERS CANYON ROAD, SUITE 130
IRVINE, CALIFORNIA 92606
PHONE: 949-387-8500 EXT 313

PROJECT DESCRIPTION

THE INTENT OF THIS PROJECT IS THE REPLACEMENT OF EXISTING MECHANICAL EQUIPMENT IN THE CENTRAL PLANT, AS WELL AS TEMPORARY CONSTRUCTION TO FACILITATE THE EQUIPMENT REPLACEMENT, WITH LIMITED PATCH AND REPAIR OF EXISTING EXTERIOR/INTERIOR FINISHES AS REQUIRED.

PROJECT INFORMATION

OCCUPANCY AND USE

- CENTRAL PLANT BUILDING: GROUP S-1, F-1 AND GROUP H-3

CONSTRUCTION CLASSIFICATION:

- TYPE I A, FIRE RESISTIVE
- FULLY SPRINKLERED

SEISMIC ZONE:

- REFER TO STRUCTURAL DRAWINGS

CLASSIFICATION AND STATUS:
- OSHPD 1 AND IN SERVICE

NUMBER OF STORIES:

- CENTRAL PLANT BUILDING : 2 STORIES ABOVE GRADE

BUILDING HEIGHT:

- 52'-6" ABOVE GRADE (TOP OF SCREEN)

FLOOR AREA:

- GROSS HCAI BLD-00075 CENTRAL PLANT -Bldg 05:
  18,135 SF (A- 1ST FLOOR)
  + 1,430 SF (B- 1ST FLOOR)
  + 2,925 SF (C- 1ST FLOOR)
  + 1,080 SF (D- 1ST FLOOR) = 23,570 SF

  + 3,220 SF (2ND FLOOR) = 26,790 SF (TOTAL SQUAREFOOTAGE)

AREA OF WORK:

- 1,500 SF (A- 1ST FLOOR)

NUMBER OF BEDS:

- NOT APPLICABLE, THE CENTRAL PLANT IS A SEPARATE BUILDING FROM THE IN-PATIENT HOSPITAL.

SYMBOL LEGEND

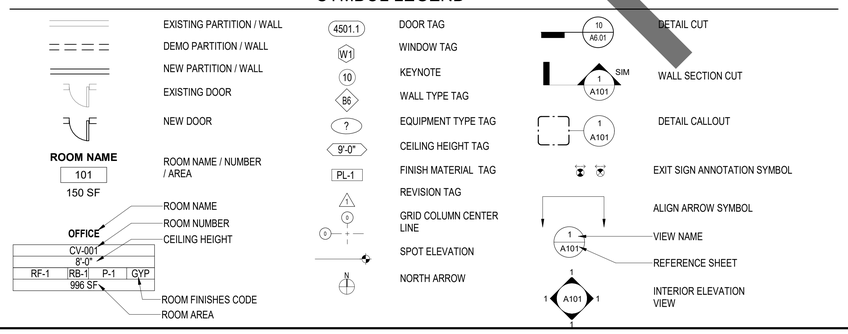

ENFORCEABLE CODES

ALL WORK PERTAINING TO AND ALL MATERIALS SUPPLIED FOR EXECUTING AND COMPLETING THIS CONTRACT SHALL COMPLY WITH PROVISIONS SPECIFIED IN THE CONTRACT DOCUMENTS AND WITH ALL APPLICABLE LAWS, REGULATIONS AND ORDINANCES GOVERNING WORK INCLUDING, BUT NOT NECESSARILY LIMITED TO, THOSE OF:

TITLE 24, CALIFORNIA CODE OF REGULATIONS

2022	CALIFORNIA ADMINISTRATIVE CODE (CAC), INCLUDING SECTIONS 7-113 & 7-115
2022	CALIFORNIA BUILDING CODE (CBC), INCLUDING SECTION 107.
2022	CALIFORNIA ELECTRICAL CODE (CEC)
2022	CALIFORNIA MECHANICAL CODE (CMC)
2022	CALIFORNIA PLUMBING CODE (CPC)
2022	CALIFORNIA ENERGY CODE
2022	CALIFORNIA FIRE CODE (CFC)

TITLE 19, CALIFORNIA CODE OF REGULATIONS
DIV. 1 - PUBLIC SAFETY - STATE FIRE MARSHALL REGULATIONS.

APPLICABLE NATIONAL FIRE PROTECTION ASSOCIATION STANDARD
NFPA 13, 72, 99.
NFPA 101 LSC

ACCESSIBILITY

THE EXISTING HOSPITAL IS CONSIDERED ACCESSIBLE. THE PROJECT HAS NO IMPACT ON EXTERIOR PATHS OF TRAVEL OR CAMPUS ELEMENTS SUCH AS PARKING. SEE SHEET G-100 FOR ACCESSIBLE PATH OF TRAVEL ROUTING FROM FROM THE PUBLIC WAY, TO THE EXTERIOR PRIMARY ENTRANCE OF THE BUILDING TO THE PROJECT SCOPE OF WORK AREA.

DEFERRED SUBMITTALS

NOT APPLICABLE

NOT FOR BID

APPROVAL

REVIEWED IN ACCORDANCE WITH THE REQUIREMENTS OF T24, CCR
APPROVED
Department of Health Care Access & Information
Office of Statewide Hospital Planning & Development
6/9/2023, 7:23:46 AM
S230562-36-00
Allen Cheng

CLIENT

SAN BERNARDINO COUNTY

SAN BERNANDINO COUNTY
PROJECT AND FACILITIES MANAGEMENT DEPARTMENT

385 NORTH ARROWHEAD AVENUE, 3RD FLOOR SAN BERNARDINO, CA 92415-0184

PROJECT NAME

ARMC DEAERATOR #1 REPLACEMENT

PROJECT NO.
WBSE # 10.10.0847
CIP # 20-011
HCAI # S230562-36-00

FACILITY NO.
17282

BUILDING NO.
BLD-00075 CENTRAL PLANT

400 N. PEPPER AVENUE
COLTON, CA 92324-1801

ENGINEER/ARCHITECT

IDS

IDS GROUP

1 PETERS CANYON ROAD, SUITE 130
IRVINE, CA. 92606
TEL: 949-387-8500, FAX: 949-387-0800

STAMP

LICENSED ARCHITECT
JOSEPH H. MACDONALD
C-34131
JUNE 2023
GENERAL DATE
STATE OF CALIFORNIA

STAMP

REGISTERED PROFESSIONAL ENGINEER
DARREN B. SMITH
No. 30841
Exp. 12/31/24
MECHANICAL
STATE OF CALIFORNIA

ISSUE

REV.	DESCRIPTION	DATE
	HCAI SUBMITTAL	03/01/23
A	HCAI BC 1	06/13/23
B	HCAI BC 2	07/28/23

PROJECT IDENTIFICATION

THE ORIGINAL SIZE OF THIS SHEET IS 30" X 42"

THESE DRAWINGS AND SPECIFICATIONS ARE THE PROPERTY AND COPYRIGHT OF IDS GROUP AND SHALL NOT BE USED ON ANY OTHER PROJECT OR LOCATIONS EXCEPT AS DESCRIBED ON THE DRAWINGS, WITHOUT THE WRITTEN AGREEMENT WITH IDS GROUP.

IDS PROJECT NO.	22X66.02
DRAWN BY	CKC
CHECKED BY	CKC
APPROVED BY	JHM

SHEET TITLE

PROJECT INFORMATION

SHEET NUMBER

G-001

SHEET NO. OF

IDS GROUP - FILE LOCATION: C:\Users\chris.corbett\Documents\22X066.02_ARCH_R20_chris.corbett\RXSMS.rvt
7/24/2023 9:27:16 AM

IDS GROUP - FILE LOCATION: 7/24/2023 9:27:16 AM C:\Users\chris.corbett\Documents\22X066.02_ARCH_R20_chris.corbettRXSMS.rvt

GENERAL NOTES

CONTRACTOR OBLIGATIONS FOR MITIGATION MONITORING AND REPORTING PROGRAM

1. THE CONTRACTOR SHALL INSTALL A VISUAL BARRIER (E.G., GREEN MESH FABRIC) ALONG THE PERIMETER OF CONSTRUCTION SITES FOR VERTICAL CONSTRUCTION PROJECTS. THIS REQUIREMENT SHALL BE SUBMITTED TO ARCHITECT AS A CONTRACTOR SUBMITTAL AND VERIFIED BY THE COMMUNITY DEVELOPMENT DEPARTMENT PRIOR TO SITE WORK.

2. DUST CONTROL. THE CONTRACTOR SHALL BE REQUIRED TO COMPLY WITH SCAQMD RULES 402 AND 403, WHICH SHALL ASSIST IN REDUCING SHORT-TERM AIR POLLUTANT EMISSIONS. SCAQMD RULE 402 REQUIRES THAT AIR POLLUTANT EMISSIONS NOT BE A NUISANCE OFF SITE. SCAQMD RULE 403 (TABLES 1, 2, AND 3 OF RULE 403) REQUIRES THAT FUGITIVE DUST BE CONTROLLED WITH THE BEST AVAILABLE CONTROL MEASURES SO THAT THE PRESENCE OF SUCH DUST DOES NOT REMAIN VISIBLE IN THE ATMOSPHERE BEYOND THE PROPERTY LINE OF THE EMISSION SOURCE. THIS REQUIREMENT SHALL RESUBMITTED TO ARCHITECT AS A CONTRACTOR SUBMITTAL AND VERIFIED BY THE COMMUNITY DEVELOPMENT DEPARTMENT PRIOR TO SITE WORK.

3. ARCHITECTURAL COATINGS SHALL BE SELECTED SO THAT THE VOC CONTENT OF THE COATINGS IS COMPLIANT WITH SCAQMD RULE 1113. THIS REQUIREMENT SHALL RESUBMITTED TO ARCHITECT AS A CONTRACTOR SUBMITTAL AND VERIFIED BY THE COMMUNITY DEVELOPMENT DEPARTMENT PRIOR TO COATING WORK.

4. CONTRACTOR TO REDUCE PROJECT CONSTRUCTION AIR QUALITY IMPACTS DURING CONSTRUCTION. THE FOLLOWING SHALL BE IMPLEMENTED BY CONTRACTOR DURING CONSTRUCTION:
   a. WATER ACTIVE SITES AT LEAST TWICE DAILY;• APPLY WATER THREE TIMES DAILY, OR NON-TOXIC SOIL STABILIZERS ACCORDING TO MANUFACTURERS' SPECIFICATIONS, TO ALL UNPAVED PARKING OR STAGING AREAS OR UNPAVED ROAD SURFACES;
   b. ALL TRUCKS HAULING DIRT, SAND, SOIL, OR OTHER LOOSE MATERIALS ARE TO BE COVERED;• PAVE ROAD AND ROAD SHOULDERS;• INSTALL WHEEL WASHERS WHERE VEHICLES ENTER AND EXIT THE CONSTRUCTION SITE ONTO PAVED ROADS OR WASH OFF TRUCKS AND ANY EQUIPMENT LEAVING THE SITE EACH TRIP;
   c. APPLY NON-TOXIC SOIL STABILIZERS ACCORDING TO MANUFACTURERS' SPECIFICATIONS TO ALL INACTIVE CONSTRUCTION AREAS (PREVIOUSLY GRADED AREAS INACTIVE FOR TEN DAYS OR MORE);• SUSPEND ALL EXCAVATING AND GRADING OPERATIONS WHEN WIND SPEEDS(AS INSTANTANEOUS GUSTS) EXCEED 25 MILES PER HOUR;
   d. SWEEP STREETS AT THE END OF THE DAY IF VISIBLE SOIL IS CARRIED ONTO ADJACENT PUBLIC PAVED ROADS;
   e. APPOINT A CONSTRUCTION RELATIONS OFFICER TO ACT AS A COMMUNITY LIAISON CONCERNING ON-SITE CONSTRUCTION ACTIVITY, INCLUDING RESOLUTION OF ISSUES RELATED TO PM10 GENERATION; AND• REQUIRE ALL VEHICLES AND EQUIPMENT TO BE PROPERLY TUNED AND MAINTAINED ACCORDING TO MANUFACTURERS' SPECIFICATIONS.

5. NOISE GENERATING: PROJECT CONSTRUCTION ACTIVITIES SHALL TAKE PLACE BETWEEN THE HOURS OF 7:00 AM AND 7:00 PM ON ANY DAY, AND ARE NOT PERMITTED ON SUNDAYS OR A CITY-RECOGNIZED HOLIDAY. THE CONTRACTOR SHALL COMPLY WITH CITY OF COLTON NOISE ORDINANCE AS OUTLINED IN THE MUNICIPAL CODE.

6. CONTRACTOR TO INSTALL WINDOW ASSEMBLIES THAT ARE TESTED AND CERTIFIED TO PREVENT THE INTRUSION OF EXTERIOR NOISE SO THAT THE INTERIOR NOISE LEVEL WITH WINDOWS CLOSED, ATTRIBUTABLE TO EXTERIOR SOURCES, SHALL NOT EXCEED 45 DBA DECIBEL IN ANY HABITABLE ROOM. THIS REQUIREMENT SHALL BE SUBMITTED TO ARCHITECT AS A CONTRACTOR SUBMITTAL.

7. CONTRACTOR TO SUBMIT EVIDENCE TO THE ARCHITECT AND OWNER THAT THE FOLLOWING NOISE REDUCTION MEASURES AS STATED ON THE CONSTRUCTION PLANS AND SPECIFICATIONS ARE BEING IMPLEMENTED:
   a. CONSTRUCTION TRAFFIC SHALL BE LIMITED TO HAUL ROUTES ESTABLISHED BY THE CITY OF COLTON.
   b. STATIONARY EQUIPMENT (SUCH AS GENERATORS AND AIR COMPRESSORS) SHALL BE LOCATED AS FAR FROM RESIDENCES, INCLUDING HOTEL ROOMS, AS FEASIBLE.
   c. EQUIPMENT MAINTENANCE AND STAGING AREAS SHALL BE LOCATED AS FAR AWAY FROM RESIDENCES AS FEASIBLE.
   d. CONSTRUCTION EQUIPMENT SHALL BE FITTED WITH MANUFACTURER'S STANDARD, OR BETTER, NOISE-SHIELDING AND MUFFLING DEVICES TO REDUCE NOISE LEVELS TO THE MAXIMUM EXTENT FEASIBLE.
   e. THE PROJECT OWNER/DEVELOPER SHALL DESIGNATE A CONSTRUCTION COMPLAINT MANAGER FOR THE PROJECT. A TELEPHONE CONTACT NUMBER SHALL BE CLEARLY POSTED AT ALL ACTIVE ACCESS POINTS.

CUTTING AND PATCHING

1. THE CONTRACTOR SHALL IN THE WORK OF ALL TRADES, PERFORM ALL CUTTING, PATCHING, REPAIRING, RESTORING AND THE LIKE NECESSARY TO COMPLETE THE WORK AND TO RESTORE ANY DAMAGED OR AFFECTED SURFACES RESULTING FROM THE WORK OF THIS CONTRACT TO THEIR ORIGINAL CONDITION TO THE SATISFACTION OF THE OWNERS AND THE ARCHITECT.

2. CONTRACTOR SHALL BE RESPONSIBLE FOR ALL CUTTING, FITTING, PATCHING, AND FIRE SAFING METHODS REQUIRED TO COMPLETE THE WORK INCLUDING BUT NOT LIMITED TO THE FOLLOWING:

   a. UNCOVERED PORTIONS OF THE WORK USED TO PROVIDE FOR INSTALLATION OF UNSCHEDULED WORK.
   b. REMOVE AND REPLACE DEFECTIVE WORK.
   c. REMOVE AND REPLACE WORK NOT CONFORMING TO REQUIREMENTS OF CONTRACT DOCUMENTS.
   d. PROVIDE ROUTINE PENETRATIONS OF NON-STRUCTURAL SURFACES FOR INSTALLATION OF PIPING AND ELECTRICAL CONDUIT.
   e. REMOVE EXISTING WORK INDICATED IN THE DOCUMENTS AND AS MAY BE REQUIRED TO PERMIT THE PROPER INSTALLATION OF NEW WORK THAT FORMS PART OF HIS CONTRACT. ALL CUTTING,REPAIRING AND/OR PATCHING NECESSARY IN CONNECTION WITH SUCH REMOVALS SHALL BE DONE WITHOUT EXTRA CHARGE, WHETHER OR NOT EVERY ITEM MAY BE SPECIFICALLY DESCRIBED.

3. PROCEDURES FOR NON-STRUCTURAL CUTTING AND PATCHING:

   a. PROVIDE ADEQUATE TEMPORARY SUPPORT AS NECESSARY TO ASSURE THE STRUCTURAL VALUE INTEGRITY OF THE AFFECTED PORTION OF THE WORK.
   b. PROVIDE DEVICES AND METHODS TO PROTECT OTHER PORTIONS OF THE PROJECT FROM DAMAGE.
   c. PROVIDE PROTECTION FROM THE ELEMENTS FOR THAT PORTION OF THE PROJECT WHICH MAY BE EXPOSED BY CUTTING AND PATCHING WORK.
   d. EXECUTE CUTTING BY METHODS WHICH WILL PREVENT DAMAGE TO OTHER WORK, AND WILL PROVIDE PROPER SURFACES TO RECEIVE INSTALLATION OR REPAIRS.
   e. EXECUTE FITTING AND ADJUSTMENT OF PRODUCTS TO PROVIDE A FINISHED INSTALLATION TO COMPLY WITH SPECIFIED PRODUCTS, FUNCTIONS, TOLERANCES AND FINISHES, AND MANUFACTURER'S CRITERIA.
   f. RESTORE WORK WHICH HAS BEEN CUT OR REMOVED. INSTALL NEW PRODUCTS TO PROVIDE COMPLETE WORK IN ACCORDANCE WITH REQUIREMENTS OF CONTRACT DOCUMENTS.
   g. REFINISH ENTIRE SURFACE AS NECESSARY TO PROVIDE AN EVEN FINISH TO MATCH ADJACENT FINISHES.

DEMOLITION

1. CONTRACTOR SHALL PROVIDE A "DISCOVERY PROCESS" TO IDENTIFY POTENTIAL COMPLICATIONS WITHIN THE SCOPE OF WORK, PRIOR TO ANY DEMOLITION.
2. INTEGRITY OF EXISTING CONCRETE FLOOR (ABOVE AND BELOW) SHALL REMAIN INTACT.
3. CONTRACTOR SHALL VERIFY ALL EXISTING CONDITIONS ESPECIALLY PIPES, DUCTS, AND CONDUIT.
4. ALL DEMOLITION WORK SHALL BE IN ACCORDANCE WITH CHAPTER 33 OF THE CALIFORNIA BUILDING CODE.
5. ALL DEMOLITION WORK SHALL BE IN ACCORDANCE WITH THE CALIFORNIA FIRE CODE, SECTION 103.3.3 (INCLUDING ARTICLE 87).
6. THE CONTRACTOR SHALL FIELD SURVEY / AND VERIFY EXISTING CONDITIONS PRIOR TO STARTING ANY WORK.
7. DURING THE DEMOLITION, THE CONTRACTOR SHALL ALWAYS BE AWARE OF THE INTENDED FINAL RENOVATION CONDITIONS OF THE STRUCTURE AND THE REASON THE DEMOLITION WORK IS BEING DONE.
8. THE CONTRACTOR MUST ALLOW FOR ADDITIONAL DEMOLITION THAT MAY NOT BE SHOWN, BUT IS REQUIRED TO ACHIEVE THE FINISHED RESULT, AS SHOWN ON THE DRAWING.
9. DO NOT DISTURB OR DAMAGE IN ANY WAY EXISTING STRUCTURAL ELEMENTS. THE BUILDING HAS TO COMPLY WITH ALL SAFETY REGULATIONS AT ALL TIMES.
10. THE CONTRACTOR SHALL RESTORE TO ITS ORIGINAL CONDITION ANY EXISTING WORK DAMAGED DURING DEMOLITION BUT INDICATED TO REMAIN.
11. ALL REMOVED MATERIALS AND EQUIPMENT WHICH IN THE OPINION OF THE OWNER/ARCHITECT ARE SALVAGEABLE, SHALL REMAIN THE PROPERTY OF THE OWNER. DELIVER SUCH SALVAGED MATERIALS AND EQUIPMENT ON PREMISES AS DIRECTED, NEATLY PILE OR STORE THEM AND PROTECT FROM DAMAGE. DO NOT REUSE MATERIALS AND EQUIPMENT UNLESS SPECIFICALLY INDICATED ON PLANS OR SPECIFIED. REMOVE FROM PREMISES AND DISPOSE OF ALL MATERIALS CONSIDERED BY THE OWNER/ARCHITECT TO BE SCRAP. RECYCLE MATERIALS PER CURRENT JURISDICTIONAL CODE.
12. ALL RUBBISH AND DEBRIS RESULTING FROM DEMOLITION AND/OR NEW WORK SHALL BE RECYCLED AND/OR DISPOSED OF OFF-SITE AND SHALL NOT BE ALLOWED TO ACCUMULATE.

CONTRACTOR OBLIGATIONS

1. CONTRACTOR FOR THE PROJECT SHALL BE RESPONSIBLE FOR OBTAINING ALL REQUIRED BUILDING PERMITS PRIOR TO COMMENCING WORK.

2. THE CONTRACTOR SHALL INSURE THAT ALL WORK IS DONE IN A PROFESSIONAL WORK-MAN-LIKE MANNER BY SKILLED MECHANICS AND SHALL REPLACE ANY NEW AND/OR EXISTING MATERIALS OR ITEMS INDICATED TO REMAIN DAMAGED BY ANY CAUSE DURING CONSTRUCTION.

3. THE CONTRACTOR AND/OR SUBCONTRACTOR SHALL, PRIOR TO THE SUBMISSION OF HIS BID OR PERFORMANCE OF WORK, NOTIFY THE OWNER OF ANY WORK CALLED OUT ON THE DRAWINGS OR IN THE SPECIFICATIONS IN HIS TRADE THAT CANNOT BE FULLY GUARANTEED OR WARRANTED FROM DEFECTIVE WORKMANSHIP OR MATERIAL DEFECTS.

4. THE CONTRACTOR SHALL NOTIFY THE ARCHITECT IF DETAILS ARE CONSIDERED UNSOUND, UNSAFE, NOT WATERPROOF, OR NOT WITHIN CUSTOMARY TRADE PRACTICE. IF WORK IS PERFORMED, IT WILL BE ASSUMED THAT THERE IS NO OBJECTIONS TO THE DETAIL. DETAILS ARE INTENDED TO SHOW END RESULT OF DESIGN, MINOR MODIFICATIONS MAY BE REQUIRED TO SUIT JOB CONDITIONS AND CURRENT TRADE PRACTICE AND SHALL BE INCLUDED AS PART OF THIS PROJECT.

5. CONTRACTOR SHALL BE RESPONSIBLE FOR ALL FINISHES AT POINT OF CONNECTIONS FOR ALL WORK (ARCHITECTURAL, STRUCTURAL, MECHANICAL AND ELECTRICAL) FINISHES WILL MATCH THOSE SPECIFIED OR EXISTING IN LINE, TEXTURE AND FINISH. SPOT PAINTING IS NOT ACCEPTABLE. NEW FINISHES SHALL BE FROM CORNER TO CORNER, FLOOR TO CEILING, ETC.

6. UNLESS OTHERWISE NOTED, ALL MATERIALS SHALL BE NEW AND OF GOOD QUALITY. WHERE EXISTING MATERIALS ARE INDICATED TO BE SALVAGED, CONTRACTOR SHALL INVENTORY, CLEAN,BOX PROTECT, AND STORE ITEMS FOR REUSE ON THE PROJECT. ITEMS NOT REUSED SHALL BE RETURNED TO OWNER.

7. COORDINATION: THE GENERAL AND EACH SUB CONTRACTOR SHALL BE RESPONSIBLE FOR VERIFICATION AND COORDINATION WITH OTHER SUB CONTRACTORS TO ASSURE COMPLIANCE WITH DRAWINGS AND SPECIFICATIONS, AND THE ACCURATE LOCATION OF ARCHITECTURAL, STRUCTURAL, MECHANICAL AND ELECTRICAL BUILDING ELEMENTS. THEIR REQUIRED OPENINGS CLEARANCES SUPPORT SYSTEMS ARE ALL INTERCONNECTED AND COORDINATED.

8. CONTRACTOR SHALL BE RESPONSIBLE FOR COORDINATING THE WORK OF ALL TRADES AND FOR BEING AWARE OF ALL CONDITIONS THAT AFFECT THEIR WORK. NOTIFY OWNER, IN WRITING, WITHIN 3 WORKING DAYS OF AWARD OF CONTRACT, OF THE PROPOSED DELIVERY SCHEDULE, OF ANY EQUIPMENT, FINISHES OR MATERIAL, FOR WHICH THAT SCHEDULE WILL PREVENT THE INSTALLATION FROM BEING COMPLETED AT THE TIME OF THE SCHEDULED PROJECT COMPLETION.

   COORDINATION OF WORK:

- THE CONTRACTORS SHALL PROVIDE AND COORDINATE THE EXACT DIMENSIONS SIZES AND POSITIONS OF ALL SYSTEMS, EQUIPMENT, MOUNTING, AND ATTACHMENTS RELATING TO THE WORK.
- THE CONTRACTOR SHALL PROVIDE AND COORDINATE ALL DIMENSIONS SIZES AND POSITIONS OF OPENINGS IN SLABS AND WALLS NECESSARY TO THE INSTALLATION OF THE WORK.
- ALL EQUIPMENT, CONTROLS AND TERMINATIONS SHALL BE POSITIONED FOR SAFE, DIRECT AND EASY ACCESS.
- IT SHALL BE THE RESPONSIBILITY OF THE CONTRACTOR TO CHECK WITH THE ARCHITECTURAL DRAWINGS BEFORE PROCEEDING WITH INSTALLATION OF CIVIL, STRUCTURAL, MECHANICAL, PLUMBING, AND ELECTRICAL WORK. SHOULD THERE BE ANY DISCREPANCIES BETWEEN THE ARCHITECT'S AND THE ENGINEER'S DRAWINGS AND SPECIFICATIONS THAT WOULD CAUSE A CONFLICT, IT SHALL BE BROUGHT TO THE ARCHITECT'S ATTENTION FOR CLARIFICATION PRIOR TO INSTALLATION OF SAID WORK. ANY WORK INSTALLED IN CONFLICT WITH THE ARCHITECTURAL DRAWINGS SHALL BE CORRECTED BY THE CONTRACTOR AT HIS EXPENSE AND AT NO ADDITIONAL EXPENSE TO THE OWNER OR ARCHITECT.

9. THE CONTRACTOR SHALL VERIFY ALL DIMENSIONS AND CONDITIONS OF EXISTING SITE PRIOR TO BIDDING AND START OF CONSTRUCTION. THE CONTRACTOR SHALL REPORT TO THE ARCHITECT ALL CONDITIONS WHICH PREVENT THE PROPER EXECUTION OF ITS WORK. THE DRAWINGS SHALL NOT BE SCALED.

10. ALL SYMBOLS AND ABBREVIATIONS USED ON THE DRAWINGS ARE CONSIDERED TO BE CONSTRUCTION STANDARDS. IF THE CONTRACTOR HAS QUESTIONS REGARDING ABBREVIATIONS OR THEIR EXACT MEANING, THE ARCHITECT SHALL BE NOTIFIED IN WRITING FOR CLARIFICATION.

11. CONTRACTOR SHALL PROVIDE AND INSTALL ALL STIFFENERS, BRACING, BACK-UP PLATES, AND SUPPORTING BRACKETS REQUIRED FOR THE INSTALLATION OF ALL CASEWORK, STAIR RAILINGS, TOILET ACCESSORIES, PARTITIONS, AND OF ALL WALL MOUNTED OR SUSPENDED MECHANICAL, ELECTRICAL, OR MISC. EQUIPMENT.

12. CONTRACTOR SHALL VERIFY SIZES AND LOCATIONS OF ALL MECHANICAL AND ELECTRICAL PADS AND BASES AS WELL AS POWER OR WATER AND DRAIN INSTALLATIONS WITH EQUIPMENT MANUFACTURERS BEFORE PROCEEDING WITH WORK. CHANGES TO ACCOMMODATE FIELD CONDITIONS OR SUBSTITUTIONS SHALL BE MADE WITHOUT ADDITIONAL CHARGE TO OWNER.

FIRE PROTECTION:

1. FIRE PROTECTION FOR THIS WORK SHALL BE PROVIDED WITH A COMPLETE AND APPROVED AUTOMATIC SPRINKLER SYSTEM. THE SYSTEM SHALL BE IN ACCORDANCE WITH THE CITY BUILDING CODE, NFPA, STATE CODES AND INSURANCE UNDERWRITERS REQUIREMENTS. THE SYSTEM SHALL BE IN COMPLIANCE WITH CALIFORNIA BUILDING STANDARDS CODE (CBSC) AND AUTHORITY HAVING JURISDICTION.

2. THE CONTRACTOR SHALL BE RESPONSIBLE FOR DESIGN OF THE SYSTEM AND SHALL COORDINATE ALL REQUIREMENTS FOR WET PIPE SYSTEM, FIRE RISERS, ALARM SYSTEM, FIRE SPRINKLER HEADS, PRESSURE HEADS, PRESSURE TESTS, SYSTEM AUTHORITIES, FIRE DEPARTMENT AND ALL OTHER TRADES. THE ENTIRE BUILDING SHALL BE PROVIDED WITH WET TYPE FIRE SPRINKLER SYSTEM. SYSTEM SHALL INCLUDE AUTOMATIC FIRE SPRINKLERS, DISTRIBUTION PIPING INSPECTOR TEST, FIRE PUMP AS REQUIRED,SYSTEM DRAIN RISER CONTROL ASSEMBLY, FIRE DEPARTMENT CONNECTIONS (FDC), ALARM GONG, AND PRESSURE SWITCH FOR ALARM TRANSMISSION.

3. BUILDING AND SAFETY DEPARTMENT APPROVALS FOR FIRE SPRINKLER SYSTEMS SHALL BE OBTAINED PRIOR TO INSTALLATION. THE FIRE SPRINKLER SYSTEM SHALL BE INSPECTED AND APPROVED PRIOR TO BUILDING PERMIT FINAL.

4. CONTRACTOR TO COORDINATE LOCATIONS OF ALL SPRINKLER HEADS WITH THE ARCHITECTURAL REFLECTIVE CEILING PLANS, DUCT WORK, AND ELECTRICAL FIXTURE LAYOUT. PRIOR TO FABRICATION SUBMIT LAYOUT DRAWINGS FOR ARCHITECTURAL APPROVAL.

5. IT SHALL BE THE RESPONSIBILITY OF THE CONTRACTOR TO INSTALL PIPING IN SUCH A MANNER AS TO CONFORM TO NEW STRUCTURE, AVOID OBSTRUCTIONS, PRESERVE HEADROOM, KEEP OPENINGS AND NECESSARY PASSAGEWAY CLEAR, AND MAKE ALL EQUIPMENT REQUIRING INSPECTION, MAINTENANCE AND REPAIR, ACCESSIBLE WITHOUT FURTHER INSTRUCTIONS OR EXTRA COST TO THE OWNER.

6. THE CONTRACTOR SHALL PROVIDE PORTABLE FIRE EXTINGUISHERS AS REQUIRED BY CODE AND AUTHORITY HAVING JURISDICTION, AT ALL PORTIONS OF THE BUILDING ON EACH FLOOR. THESE EXTINGUISHERS SHALL BE INSTALLED IN THE LOCATIONS APPROVED BY THE FIRE DEPARTMENT AND THE ARCHITECT.

7. WHERE TESTING LABORATORY DESIGN NUMBERS ARE LISTED FOR FIRE RATED CONSTRUCTION, THE COMPONENTS AND INSTALLATION DETAILS MUST CONFORM WITH THE DESIGN NUMBER SPECIFIED.

RATED ASSEMBLY PENETRATIONS

1. MECHANICAL DUCTS, ETC. PENETRATING FIRE-RATED CEILINGS AND FIRE WALLS SHALL BE CORRESPONDINGLY RATED OR DAMPERED. CABINETS, ELECTRICAL PANELS, LIGHTS, ETC. RECESSED INTO FIRE RATED WALLS OR CEILINGS SHALL BE BACKED WITH CORRESPONDING FIRE-RESISTIVE CONSTRUCTION AS REQUIRED TO MAINTAIN THE INTEGRITY OF THE FIRE PROTECTION.

2. FIRE RESISTIVE ASSEMBLIES FOR PROTECTION OF OPENINGS SHALL COMPLY WITH CBC CHAPTER 7.

3. PENETRATION OF FIRE RATED ASSEMBLIES WHICH REQUIRE OPENING PROTECTION SHALL BE FIRE STOPPED. FIRE STOPPING SHALL BE IDENTICAL TO AN APPROVED UNDERWRITERS LABORATORIES (UL) LISTED ASSEMBLY WITH AN "F" OF "T" RATING. PENETRATIONS MUST ALSO CONSIST OF APPROVED MATERIALS FOR THROUGH WALL PENETRATIONS FIRE STOP SYSTEMS AS PRESCRIBED IN CBC STANDARD 7-5 FIRE RATING FOR FIRE STOP SYSTEMS SHALL BE EQUAL TO THE ASSEMBLY PENETRATED. (SECTION 709.6, CBC)

4. SHAFT ENCLOSURES: OPENINGS EXTENDING VERTICALLY THROUGH FLOORS SHALL BE ENCLOSED IN A SHAFT OF 1-HOUR FIRE-RESISTIVE CONSTRUCTION IF PENETRATING A 1-HOUR FIRE RATED FLOOR ASSEMBLY. SHAFTS SHALL INCLUDE A GYPSUM BOARD HORIZONTAL TERMINATION AT BOTTOM, ENGINEERED BY GENERAL CONTRACTOR. PROTECTION FOR STAIRWAYS SHALL BE AS SPECIFIED IN CODE OF JURISDICTION.

GLAZING

1. ALL GLAZING SHALL COMPLY WITH C.P.S.C. 16 C.F.R. AND CBC.

2. GLASS DOORS, ADJACENT PANELS AND ALL GLAZED OPENINGS SHALL BE APPROVED FOR IMPACT HAZARD PER CBC SECTION 2406. PROVIDE IDENTIFICATION OF GLAZING PER SECTION 2406.2

3. PROVIDE TEMPERED GLASS AS REQUIRED BY CBC SECTION 2406 AND BY OTHER APPLICABLE CODES.

SIGNAGE

1. FURNISH AND INSTALL SUPPORTS AND OTHER NECESSARY FINISH MATERIALS FOR A COMPLETE SIGNAGE INSTALLATION. BOTH INTERIOR & EXTERIOR

2. DISABILITY SIGNAGE / IDENTIFICATION
   a. THE INTERNATIONAL SYMBOL OF ACCESSIBILITY SHALL BE THE STANDARD USED TO IDENTIFY FACILITIES THAT ARE ACCESSIBLE TO AND USEABLE BY PHYSICALLY DISABLED PERSONS.
   b. LETTERS AND NUMBERS ON SIGNS HAVE A WIDTH TO HEIGHT RATIO OF BETWEEN 3:5 AND 1:1 AND STROKE WIDTH TO HEIGHT RATIO OF BETWEEN 1:5 AND 1:10.
   c. CHARACTERS AND SYMBOLS SHALL CONTRAST WITH THEIR BACKGROUND, EITHER LIGHT CHARACTERS ON A DARK BACKGROUND OR DARK CHARACTERS ON A LIGHT BACKGROUND.
   d. ALL BUILDING ENTRANCES THAT ARE ACCESSIBLE TO AND USABLE BY PHYSICALLY HANDICAPPED PERSONS SHALL BE IDENTIFIED WITH AT LEAST ONE STANDARD SIGN AND WITH ADDITIONAL DIRECTIONAL SIGNS AS REQUIRED TO BE VISIBLE TO PERSONS ALONG APPROACHING PEDESTRIAN WAYS.
   e. ALL SANITARY FACILITIES WILL BE PROVIDED WITH APPROPRIATE IDENTIFICATION SYMBOLS.

3. AREA AND OCCUPANCY SIGNAGE REQUIREMENTS OCCUPANT LOAD SIGN SHALL BE POSTED IN EACH MEETING ROOM, ASSEMBLY ROOM OR SIMILAR PURPOSE ROOM HAVING AN OCCUPANT LOAD OF 50 OR MORE.

4. EXIT SIGNS SHALL BE POSTED OVER EXITS DOORS SERVING 50 OR MORE AND ALL HAZARDOUS AREAS. MINIMUM LETTER HEIGHT IS 6" AND SHALL CONFORM WITH CBC AND LOCAL CODES. CBC SECTION 1003.2.8 AND UFC SECTION 12113A. SEE ELECTRICAL PLANS FOR LOCATIONS AND FURTHER INFO.

5. AN APPROVED SIGN SHALL BE LOCATED AT EACH FLOOR LEVEL LANDING IN ALL ENCLOSED STAIRWAYS. THE SIGN SHALL INDICATE FLOOR LEVEL, TERMINUS OF THE TOP AND BOTTOM OF THE STAIRWAY, AND THE IDENTIFICATION OF THE STAIRWAY.

EXITS

1. EXIT DOORS SHALL BE OF THE PIVOTED OR SIDE-HINGED SWINGING TYPE. EXIT DOORS SHALL SWING IN THE DIRECTION OF EXIT TRAVEL WHEN THE AREA SERVED HAS AN OCCUPANT LOAD OF 50 OR MORE.

2. EVERY EXIT DOOR SHALL BE OPERABLE FROM THE INSIDE WITHOUT THE USE OF A KEY OR ANY SPECIAL KNOWLEDGE OR EFFORT. NOTE ALSO THAT FLUSH BOLTS OR SURFACE BOLTS ARE PROHIBITED.

3. PANIC HARDWARE SHALL BE PROVIDED ON EXIT DOORS OF ROOMS, CORRIDORS, STAIRWAYS, HANDLING AN OCCUPANT CAPACITY OF 50 OR MORE PERSONS.

4. EXIT SIGNS SHALL BE INSTALLED AT REQUIRED EXIT DOORWAYS AND WHERE OTHERWISE NECESSARY TO CLEARLY INDICATE THE DIRECTION OF EGRESS IN COMPLIANCE WITH THE CODE OF JURISDICTION.

5. EGRESS DOORS SHALL BE SET IN MOTION WHEN SUBJECTED TO A 30 LB. FORCE. THE DOOR SHALL SWING TO THE FULLY OPEN POSITION WHEN AN OPENING FORCE NOT EXCEEDING 15 LBS IS APPLIED TO THE LATCH SIDE.

6. EACH DOOR IN A MEANS OF EGRESS FROM A GROUP 'A' OCCUPANCY SHALL NOT BE PROVIDED WITH A LATCH OR LOCK UNLESS IT IS PANIC HARDWARE OR FIRE EXIT HARDWARE (CBC 1008.1.9).

7. DOOR HANDLES, LOCK AND OTHER OPERATING DEVICES SHALL BE INSTALLED AT A MIN. 34" AND A MAX. 48" AFF

8. EXIT SIGNS SHALL BE CONNECTED TO AN EMERGENCY POWER SYSTEM THAT WILL PROVIDE AN ILLUMINATION OF NOT LESS THAT 90min IN DURATION. IN CASE OF PRIMARY POWER LOSS (CBC 1011.2 - 1011.5.3)

9. THE MEANS OF EGRESS, INCLUDING THE EXIT DISCHARGE, SHALL BE ILLUMINATED AT ALL TIMES THE BUILDING SPACE SERVED BY THE MEANS OF EGRESS IS OCCUPIED.

THERMAL ENVELOPE NOTES

THERMAL INSULATION PERFORMANCE TO MEET LOCAL MINIMUM ENERGY CODES. INSULATION ASSEMBLY, AS TESTED IN ACCORDANCE WITH ASTMC 518, TO PROVIDE A CONTINUOUS
THERMAL PERFORMANCE RATING AT EXTERIOR PERIMETER OF NEW WORK. PROVIDE ASSEMBLY THICKNESS TO MEET THERMAL RESISTANCE 'R' VALUE AS INDICATED BUT NO LESS THAN THE CODE. MINIMUM THERMAL RESISTANCE VALUES AS FOLLOWING:

- R-36 AT CEILING AND ATTIC SPACES
- R-19 AT EXTERIOR WALLS
- R-11 AT INTERIOR WALLS WHERE INSULATION IS USED FOR SOUND CONTROL
- R-13 AT FLOOR CRAWL SPACES

THERMAL ENVELOPE NOTES

1. DURING CONSTRUCTION OF THIS SCOPE OF WORK, CONTRACTORS MUST COMPLY AS APPLICABLE TO CCR TITLE 24 CALIFORNIA FIRE CODE CHAPTER 33 FIRE SAFETY DURING CONSTRUCTION AND DEMOLITION.

2. ENSURE EXITS PROVIDE FREE AND UNOBSTRUCTED EGRESS. PERSONNEL RECEIVE TRAINING IF ALTERNATIVE EXITS MUST BE DESIGNATED. BUILDING/AREAS UNDER CONSTRUCTION MUST MAINTAIN ESCAPE FACILITIES FOR CONSTRUCTION WORKERS AT ALL TIMES. MEANS OF EGRESS IN CONSTRUCTION AREAS ARE INSPECTED DAILY.

3. FIRE ALARM, DETECTION & SUPPRESSION SYSTEMS ARE NOT TO BE IMPAIRED. A TEMPORARY BUT EQUIVALENT SYSTEM SHALL BE PROVIDED WHEN ANY FIRE SYSTEM IS IMPAIRED. TEMPORARY SYSTEMS MUST BE INSPECTED AND TESTED MONTHLY.

4. PROVIDE ADDITIONAL FIRE-FIGHTING EQUIPMENT AND USE TRAINED PERSONNEL. CONTRACTOR TO TRAIN STAFF ON LOCATION OF AFS SHUT OFF VALVES SERVING PROJECT AREA.

5. SMOKING SHALL BE PROHIBITED AT ALL TIMES, IN OR ADJACENT TO ALL CONSTRUCTION AREAS. NO SMOKING ON STATION.

6. DEVELOP AND ENFORCE STORAGE, HOUSEKEEPING, AND DEBRIS REMOVAL PRACTICES THAT REDUCE THE FLAMMABLE AND COMBUSTIBLE FIRE LOAD OF THE BUILDING TO THE LOWEST LEVEL NECESSARY FOR DAILY OPERATIONS COMPLY WITH CHAPTER 33 FIRE SAFETY DURING CONSTRUCTION.

7. INCREASE SURVEILLANCE OF BUILDINGS, AND EQUIPMENT WITH SPECIAL ATTENTION TO EXCAVATIONS, CONSTRUCTION AREAS, CONSTRUCTION STORAGE, AND FIELD OFFICES.

8. CONDUCT ORGANIZATION-WIDE SAFETY EDUCATION PROGRAMS TO ENSURE AWARENESS OF ANY LIFE SAFETY CODE DEFICIENCIES, CONSTRUCTION HAZARDS AND INTERIM LIFE SAFETY MEASURES.

9. PROVIDE TEMPORARY DIRECTIONAL SIGNAGE APPROVED BY THE OWNER'S FACILITY REPRESENTATIVE/ PROJECT MANAGER, REFER TO G-001

GENERAL

THESE PLANS ARE THE PROPERTY OF COUNTY OF SAN BERNARDINO, AND ARE NOT TO BE USED FOR ANY OTHER THAN THE LOCATION SHOWN HEREON.

1. NO CHANGES ARE TO BE MADE ON THESE PLANS WITHOUT THE KNOWLEDGE AND CONSENT OF THE ARCHITECT OR ENGINEER WHOSE SIGNATURE APPEARS HEREON.

2. DO NOT SCALE DRAWINGS. ALL DIMENSIONS ARE TO FACE OF CONCRETE, FACE OF CONCRETE MASONRY UNITS, CENTERLINE OF COLUMNS AND BEAMS, OR FACE OF STUDS, UNLESS OTHERWISE NOTED. FINISH FLOOR ELEVATIONS ARE TO TOP OF CONCRETE SLAB OR TOP OF INTERIOR PAVING UNLESS OTHERWISE NOTED.

3. ALL LEVELS REFERENCE POINTS ARE TAKEN FROM TOP OF SHEATHING OR TOP OF CONC. SLAB/COMBO DECKING. DIMENSIONS ON ELEVATIONS, SECTIONS AND WALL SECTIONS ARE REFERENCED TO THESE POINTS, UNLESS NOTED.

4. NO SUBSTITUTIONS WILL BE ALLOWED WITHOUT PRIOR WRITTEN APPROVAL. REQUEST FOR SUBSTITUTIONS SHALL BE IN ACCORDANCE WITH THE SPECIFICATIONS OF SHEETS G-901,902 , 903 AND ETC.

- THESE DRAWINGS DO NOT CONTAIN THE NECESSARY COMPONENTS FOR CONSTRUCTION SAFETY.
- ALL CONSTRUCTION SHALL BE PERFORMED IN ACCORDANCE WITH THE STATE CONSTRUCTION SAFETY ORDERS ENFORCED BY THE STATE DIVISION OF INDUSTRIAL SAFETY.

CODES

CONSTRUCTION SHALL COMPLY WITH APPLICABLE EDITION OF CALIFORNIA BUILDING CODE, ALL APPLICABLE LOCAL, STATE AND FEDERAL CODES, ORDINANCES, LAWS, REGULATIONS AND PROTECTIVE COVENANTS GOVERNING THE WORK. IN CASE OF CONFLICTS, THE MORE STRINGENT REQUIREMENT SHALL GOVERN.

PERMIT

1. THE CONSTRUCTION OR DEMOLITION OF ANY BUILDING, STRUCTURE,USING SCAFFOLDING OR FRAMEWORK MORE THAN 3 STORIES OR 36'-0" IN HEIGHT, REQUIRES A PERMIT FROM THE STATE OF CALIFORNIA DIVISION OF INDUSTRIAL SAFETY PRIOR TO THE ISSUANCE OF A BUILDING PERMIT. (1PC.B.9)

2. A SEPARATE INTERIOR IMPROVEMENT PERMIT IS REQUIRED FOR ANY TENANT IMPROVEMENT IN THIS BUILDING.

3. A PERMIT FROM THE DEPARTMENT OF PUBLIC WORKS IS REQUIRED FOR A PROTECTION FENCE OR CANOPY ON OR OVER ANY STREET OR PUBLIC SPACE. PROTECTION OF PEDESTRIANS DURING CONSTRUCTION SHALL BE PROVIDED PER CBC SECTION 3303.

4. ALL ROOMS ARE REQUIRED TO BE MARKED WITH APPROVED SIGNAGE.

5. OBTAIN PERMIT FROM CITY ENGINEER PRIOR TO DOING ANY SIDEWALK AND CURB WORK.

6. SEPARATE PERMITS SHALL BE OBTAINED FOR SIGNS, FENCES, TRASH ENCLOSURES, RETAINING WALLS, PLANTERS, AND POOLS.

7. THE DEFERRED SUBMITTAL ITEMS SHALL NOT BE INSTALLED UNTIL THEIR DESIGN AND SUBMITTAL DOCUMENTS HAVE BEEN APPROVED BY THE BUILDING OFFICIAL. REFER TO SHEET G-001 FOR LIST OF DEFERRED SUBMITTALS.

METAL WORK

1. ALL METAL FRAMING MEMBERS SHALL BE ARRANGED AND SPACED AS TO PERMIT INSTALLATION OF PIPE CONDUITS AND DUCTWORK WITH A MINIMUM OF CUTTING. SHAFT WALLS SHALL BE PROVIDED WITH NECESSARY FRAMES, BRACING, AND SEALANT AROUND THE OPENING.

2. CONTACT BETWEEN DISSIMILAR METAL SHALL BE PROTECTED.

WOOD WORK INCLUDING METAL STUDS

1. OFFSET STUDS WHERE REQUIRED SO THAT FINISH WALL SURFACE WILL BE FLUSH. IF STRUCTURAL PANELS ARE REQUIRED ON A WALL PLANE, THE ENTIRE WALL PLANE SHALL BE FURRED OR FINISHED FLUSH.

2. INSTALL METAL CORNER BEADS AT ALL EXPOSED WALLBOARD EDGES. INSTALL CASING BEADS WHEREVER WALLBOARD, PLASTER, ETC. ABUTS A DISSIMILAR FINISH MATERIAL AND PROVIDE SEALANT AS REQUIRED.

3. GYPSUM BOARD SHALL EXTEND TO UNDERSIDE OF STRUCTURE ABOVE AT ALL EXTERIOR PERIMETER WALLS

DOORS

1. DOORS IN RATED WALLS SHALL CONSIST OF SELF-CLOSING, SELF-LATCHING ASSEMBLIES WITH SMOKE AND DRAFT SEALS AT HEAD AND JAMBS. DOOR ASSEMBLY RATINGS SHALL BE AS INDICATED ON DOOR SCHEDULE. HOLD OPEN DEVICES ON RATED ASSEMBLIES SHALL BE MAGNETICALLY OPERATED AND ACTIVATED BY SMOKE DETECTORS.

2. DOOR SIZES SHOWN ON DOOR SCHEDULE ARE OPENING SIZES. ALLOWANCE FOR THRESHOLDS, ETC., SHALL BE TAKEN OFF THE DOOR. DOORS AND FRAMES SHALL BE REINFORCED WHERE REQUIRED FOR CLOSERS, STOPS, AND HARDWARE.

3. AIR LEAKAGE AT EXTERIOR DOORS SHALL BE LIMITED BY THE FOLLOWING:
   a. ALL DOORS SHALL BE PROVIDED WITH A SEAL, ASTRAGAL, OR BAFFLE AT THE HEAD AND SILL.
   b. DOORS MOUNTED ON EITHER THE INSIDE OR OUTSIDE OF AN EXTERIOR WALL SHALL HAVE A MINIMUM 1/2" LAP AT EACH JAMB.
   c. DOORS REQUIRING VERTICAL TRACK OR GUIDES SHALL USE A CONTINUOUS MOUNTING ANGLE, SEALED IN ACCORDANCE WITH "G" LISTED HERE.
   d. DOORS MOUNTED BETWEEN THE JAMBS SHALL HAVE A CONTINUOUS SEAL OR BAFFLE AT EACH JAMB.
   e. MEETING RAILS OR SECTION DOORS AND MEETING STILES OR RAILS OR BI-PARTING DOORS SHALL BE PROVIDED WITH A SEAL, ASTRAGAL, OR BAFFLE.
   f. SWINGING DOORS SHALL BE WEATHERSTRIPPED AT THE HEAD, SILL AND JAMBS.
   g. OPEN EXTERIOR JOINTS AROUND WINDOW AND DOOR FRAMES, BETWEEN WALL AND FOUNDATIONS, BETWEEN WALL AND ROOF, BETWEEN WALL PANELS, AT PENETRATIONS OF UTILITY SERVICES THROUGH WALLS, FLOORS AND ROOFS AND ALL OTHER OPENINGS IN THE EXTERIOR ENVELOPE SHALL BE SEALED, CAULKED, GASKETED, OR WEATHERSTRIPPED TO CREATE AN AIRTIGHT ASSEMBLY.

DRAWINGS LIST

Sheet Number	Sheet Name
01-GENERAL	
G-000	COVER
G-001	PROJECT INFORMATION
G-002	DRAWING LIST AND GENERAL NOTES
G-100	ACCESSIBILITY SITE PLAN - FOR REFERENCE ONLY
G-110	CODE COMPLIANCE PLAN - FOR REFERENCE ONLY
02-ARCHITECTURAL	
A-201	OVERALL FLOOR PLAN FIRST FLOOR
A-201A	FLOOR PLAN FIRST FLOOR - PARTIAL
A-301	EXTERIOR ELEVATIONS
03-STRUCTURAL	
S-001	GENERAL NOTES
S-500	STRUCTURAL DETAILS
04-MECHANICAL	
M-001	MECHANICAL NOTES LEGEND AND ABBREVIATIONS
M-101	MECHANICAL FLOOR PLAN DEMOLITION
M-102	MECHANICAL FLOOR PLAN TEMPORARY WORK
M-201	MECHANICAL FLOOR PLAN
M-501	MECHANICAL DETAILS
06-ELECTRICAL	
E-001	ELECTRICAL FLOOR PLAN TEMPORARY WORK
E-002	SPECIFICATIONS
E-003	SIGNLE LINE DIAGRAM & LOAD CALCS
E-004	PANEL SCHEDULES
E-101	ELECTRICAL FLOOR PLAN TEMPORARY WORK
E-102	ELECTRICAL FLOOR PLAN DEMOLITION
E-201	ELECTRICAL FLOOR PLAN
E-501	ELECTRICAL DETAILS

Total Sheets: : 23

A B

NOT FOR BID

APPROVAL

REVIEWED IN ACCORDANCE WITH THE REQUIREMENTS OF T24, CCR
APPROVED
Department of Health Care Access & Information
Office of Statewide Hospital Planning & Development
8/9/2023, 7:23:46 AM
S230562-36-00
Allen Cheng

CLIENT

SAN BERNARDINO COUNTY

SAN BERNARDINO COUNTY PROJECT AND FACILITIES MANAGEMENT DEPARTMENT

385 NORTH ARROWHEAD AVENUE, 3RD FLOOR SAN BERNARDINO, CA 92415-0184

PROJECT NAME

ARMC DEAERATOR #1 REPLACEMENT

PROJECT NO.
WBSE # 10.10.0847
CIP # 20-011
HCAi # S230562-36-00

FACILITY NO.
17282

BUILDING NO.
BLD-00075 CENTRAL PLANT

400 N. PEPPER AVENUE
COLTON, CA 92324-1801

ENGINEER/ARCHITECT

IDS

IDS GROUP

1 PETERS CANYON ROAD, SUITE 130
IRVINE, CA. 92606
TEL: 949-387-8500, FAX: 949-387-0800

STAMP

LICENSED ARCHITECT
JOSEPH H. MACDONALD
C-34131
JUNE 2023
RENEWAL DATE
STATE OF CALIFORNIA

STAMP

REGISTERED PROFESSIONAL ENGINEER
DARREN B. SMITH
No. 30841
Exp. 12/31/24
MECHANICAL
STATE OF CALIFORNIA

ISSUE

REV.	DESCRIPTION	DATE
	HCAI SUBMITTAL	03/01/23
A	HCAI BC 1	06/13/23
B	HCAI BC 2	07/28/23

PROJECT IDENTIFICATION

THE ORIGINAL SIZE OF THIS SHEET IS 30" X 42"

THESE DRAWINGS AND SPECIFICATIONS ARE THE PROPERTY AND COPYRIGHT OF IDS GROUP AND SHALL NOT BE USED ON ANY OTHER PROJECT OR LOCATIONS EXCEPT AS DESCRIBED ON THE DRAWINGS, WITHOUT THE WRITTEN AGREEMENT WITH IDS GROUP.

IDS PROJECT NO.	22X66.02
DRAWN BY	CKC
CHECKED BY	CKC
APPROVED BY	JHM

SHEET TITLE

DRAWING LIST AND GENERAL NOTES

SHEET NUMBER

G-002

SHEET NO. OF

NOT FOR BID
VOID/ NOT USED

ACCESSIBLE DOOR HARDWARE — 1" = 1'-0" — D2

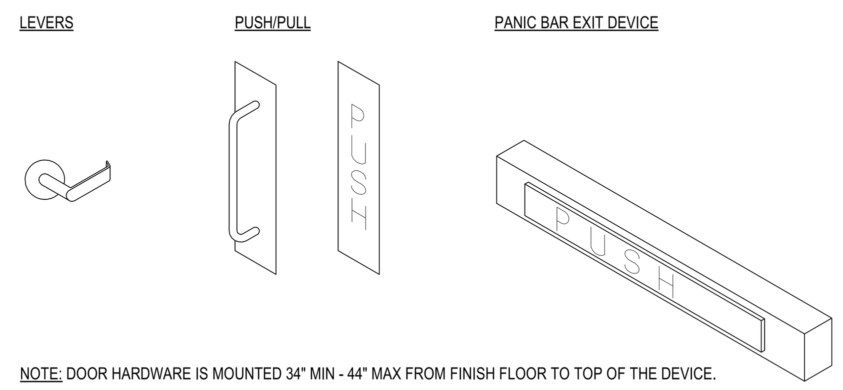

NOTE: DOOR HARDWARE IS MOUNTED 34" MIN - 44" MAX FROM FINISH FLOOR TO TOP OF THE DEVICE.

LATCHING & LOCKING DOORS THAT ARE HAND OPERATED AND WHICH ARE IN A PATH OF TRAVEL ARE OPERABLE WITH A SINGLE EFFORT (LEVER, PUSH/PULL, PANIC BAR OR OTHER HARDWARE ASSIGNED TO PROVIDE PASSAGE WITHOUT REQUIRING THE ABILITY TO GRASP, PINCH, OR TWIST THE OPENING HARDWARE)

MAXIMUM EFFORT TO OPERATE DOORS SHALL NOT EXCEED 5 LBF, WHEN FIRE DOORS ARE REQUIRED THE MAX EFFORT TO OPERATE THE DOOR MAY BE INCREASED TO THE MINIMUM ALLOWABLE BY THE APPROPRIATE AUTHORITY , NOT TO EXCEED 15 LBF.

ACCESSIBLE ROUTES — 1/4" = 1'-0" — A1

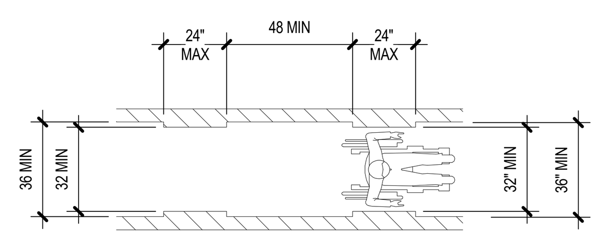

CBC FIGURE 11B-403.5.1
ABAAS FIGURE 403.5.1
CLEAR WIDTH FOR AN ACCESSIBLE ROUTE

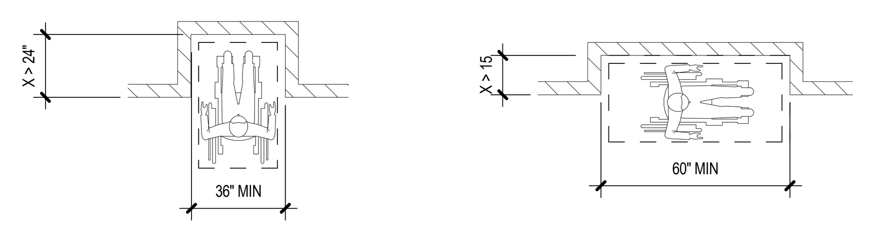

CBC FIGURE 11B-305.7.1
ABAAS FIGURE 305.7.1
MANUEVERING CLEARANCE IN AN ALCOVE, FORWARD APPROACH

CBC FIGURE 11B-305.7.2
ABAAS FIGURE 305.7.2
MANUEVERING CLEARANCE IN AN ALCOVE, PARALLEL APPROACH

CBC FIGURE 11B-305.5
ABAAS FIGURE 305.5
POSITION OF CLEAR FLOOR OR GROUND SPACE

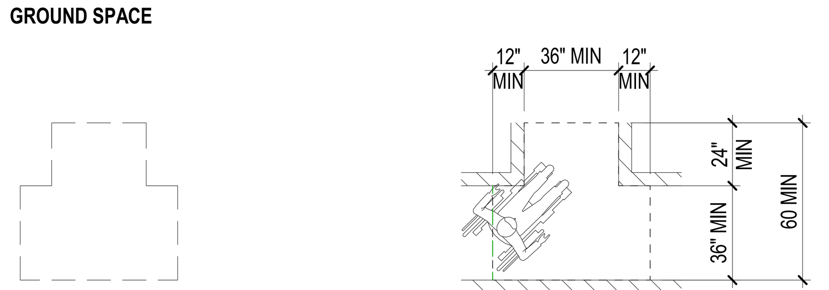

CBC FIGURE 11B-304.3.2
ABAAS FIGURE 304.3.2
T-SHAPED TURNING SPACE
T-SHAPED SPACE FOR 180 DEGREE TURNS

CBC FIGURE 11B-304.2
ABAAS FIGURE 304.3.2
T-SHAPED TURNING SPACE

60" DIAMETER SPACE
FOR 180 DEGREE TURNS

66" DIAMETER SPACE

ABAAS 304.3.1 CIRCULAR SPACE.
THE TURNING SPACE SHALL BE A SPACE OF
60 INCHES DIAMETER MINIMUM

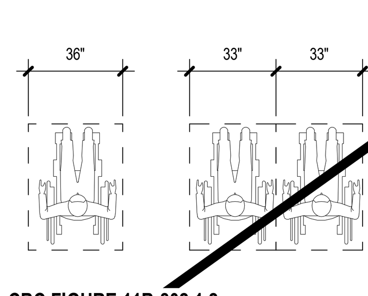

CBC FIGURE 11B-802.1.2
ABAAS FIGURE 802.1.2
WIDTH OF WHEELCHAIR SPACES

ACCESSIBLE DOORS IN A SERIES — 1/2" = 1'-0" — A2

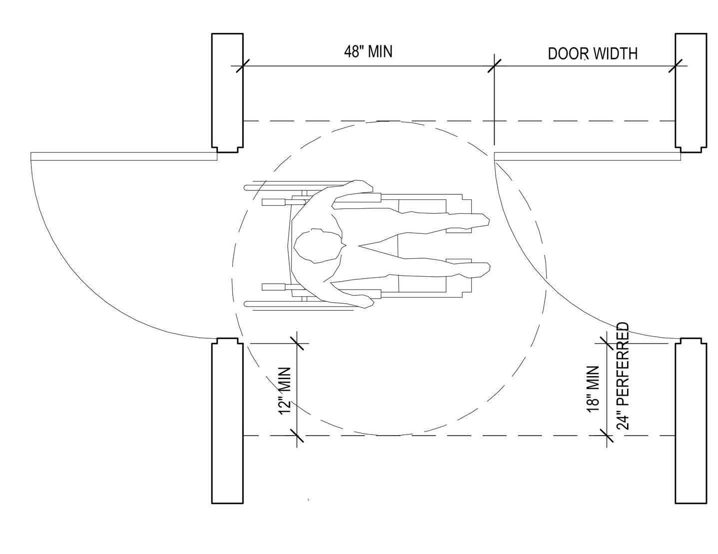

A

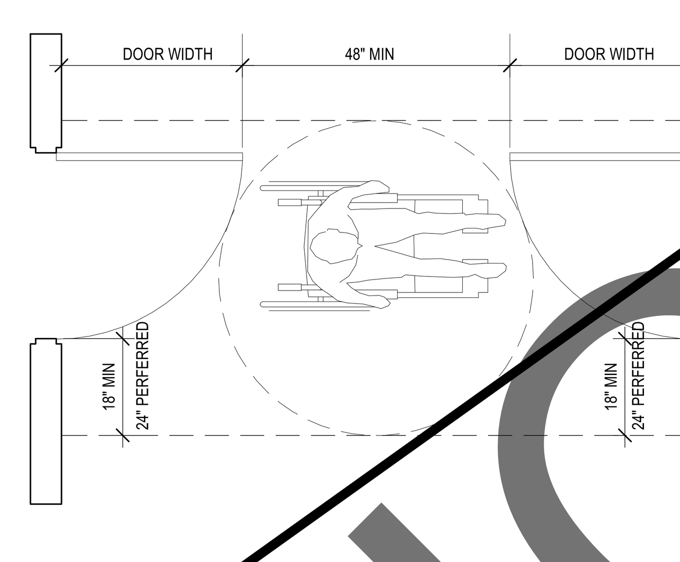

B

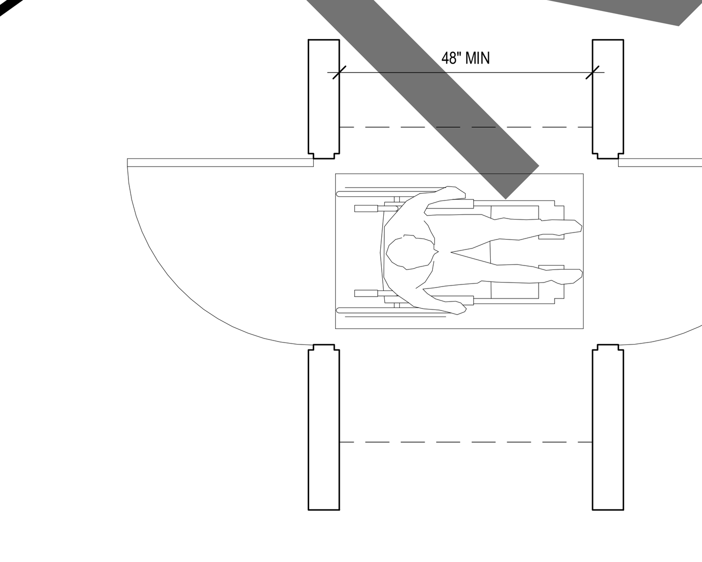

C

MANEUVERING CLEARANCES — 1/2" = 1'-0" — B3

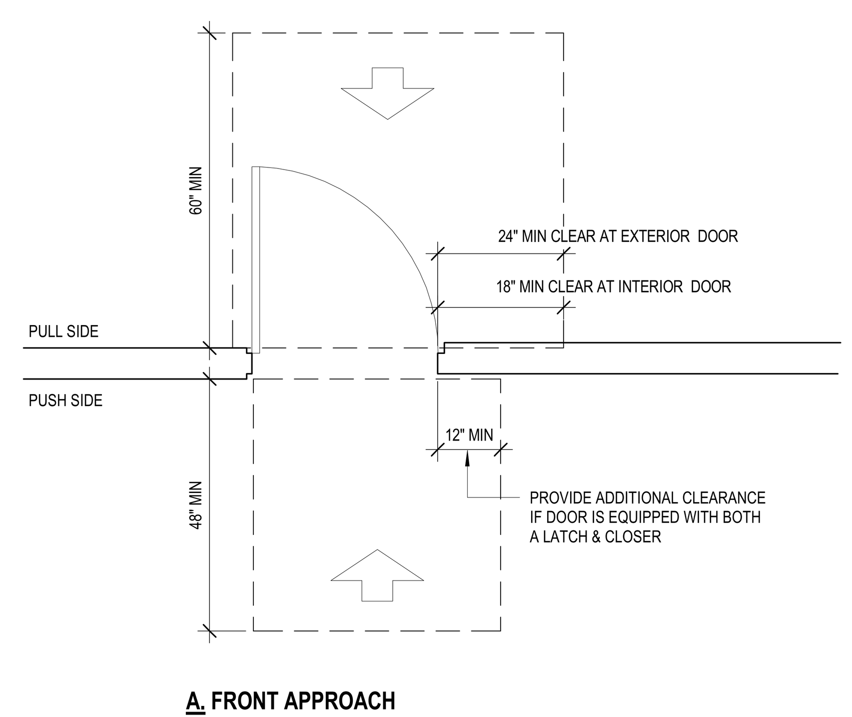

A. FRONT APPROACH

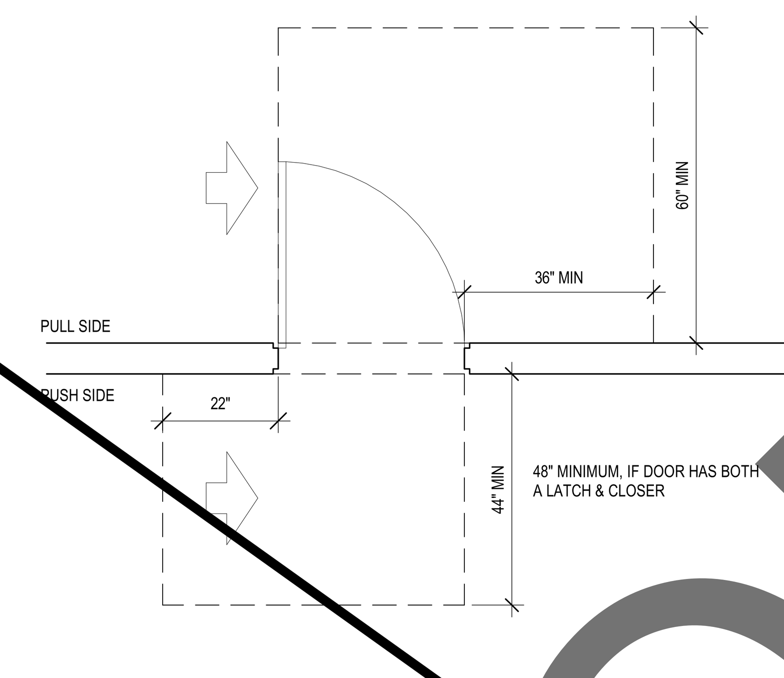

B. HINGE APPROACH

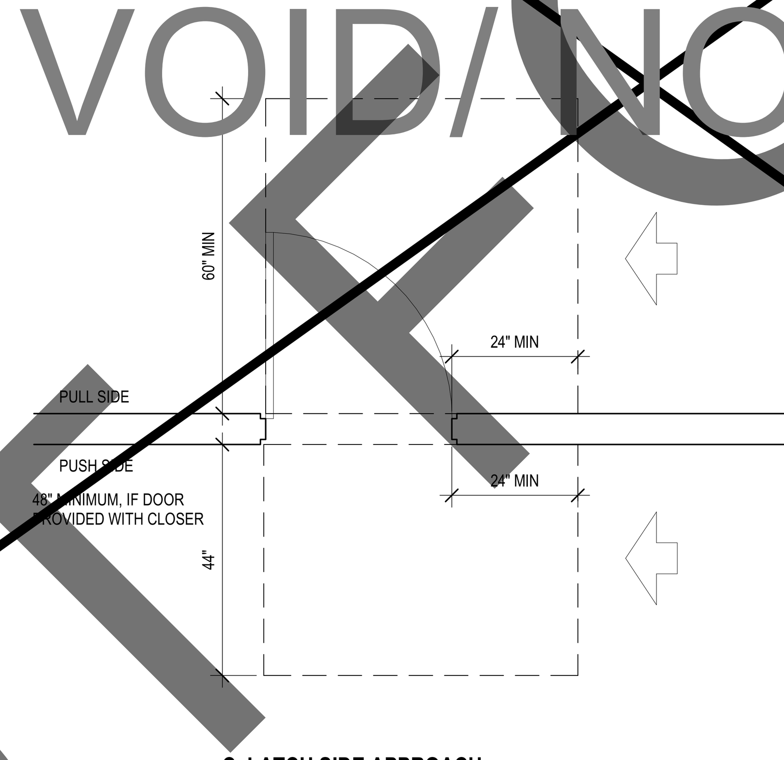

C. LATCH SIDE APPROACH

CBC FIGURE 11B-404.2.4.2
ABAAS FIGURE 404.2.4.2
MANEUVERING CLEARANCES AT DOORWAYS WITHOUT DOORS, SLIDING DOORS, GATES AND FOLDING DOORS

ACCESSIBLE THRESHOLD — 6" = 1'-0" — A3

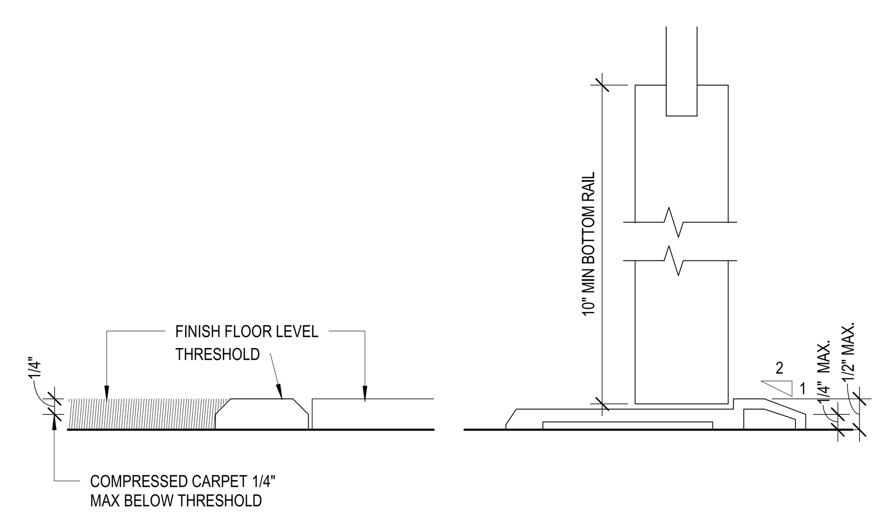

NOTE: NEW BUILDING INTERIOR AND EXTERIOR THRESHOLDS WILL BE REQUIRED TO BE NO HIGHER THAN 1/2" ABOVE THE ADJACENT FLOOR LEVELS. EACH EXPOSED EDGE OF THRESHOLDS IS REQUIRED TO BE BEVELED OR SLOPED AT AN ANGLE NOT TO EXCEED 45 DEGREES SO THAT NO VERTICAL CHANGE OF ELEVATION EXCEEDS 1/4"

ACCESSIBILITY NOTES

DOORS AND ENTRANCES:

1. MANUALLY OPERATED EDGE OR SURFACE MOUNTED FLUSH BOLTS AND SURFACE BOLTS OR ANY OTHER TYPE OF DEVICE THAT MAY BE USED TO CLOSE OR RESTRAIN THE DOOR OTHER THAN BY OPERATION OF THE LOCKING DEVICE SHALL NOT BE USED. WHERE EXIT DOORS ARE USED IN PAIRS AND APPROVED AUTOMATIC FLUSH BOLTS ARE USED, THE DOOR LEAF HAVING THE AUTOMATIC FLUSH BOLTS SHALL HAVE NO DOOR KNOB OR SURFACE-MOUNTED HARDWARE. THE UNLATCHING OF ANY LEAF SHALL BE OPERABLE WITH ONE HAND AND SHALL NOT REQUIRE TIGHT GRASPING, PINCHING, OR TWISTING OF THE WRIST. THE FORCE REQUIRED TO ACTIVATE OPERABLE PARTS SHALL BE 5 LBS MAX.

2. BARS, GRILLES, GRATES OR SIMILAR DEVICES PLACED OVER EXIT DOORS SHALL BE OPENABLE FROM INSIDE WITHOUT THE USE OF A KEY, TOOL, OR ANY SPECIAL KNOWLEDGE OR EFFORT. SUCH BARS, GRILLES, GRATES, OR SIMILAR DEVICES SHALL BE EQUIPPED WITH AN APPROVED RELEASE DEVICE FOR USE BY THE FIRE DEPARTMENT ONLY ON THE EXTERIOR SIDE FOR PURPOSE BY THE FIRE DEPARTMENT EMERGENCY ACCESS, WHEN REQUIRED BY THE AUTHORITY HAVING JURISDICTION.

3. THE CLEAR WIDTH OF MEANS OF EGRESS COMPONENTS IN AREA SERVING BED OR LITTER PATIENTS SHALL BE SUCH TO ALLOW READY PASSAGE OF BEDS, GURNEYS AND SIMILAR EQUIPMENTS, BUT SHALL NOT BE LESS THAN 44 INCHES. ENTRANCE DOORS TO PATIENTS' BEDROOMS FROM CORRIDORS SHALL NOT SWING INTO THE REQUIRED WIDTH OF CORRIDORS.

4. FOR HINGED DOOR, THE OPENING WIDTH SHALL BE MEASURED WITH THE DOOR POSITIONED AT AN ANGLE OF 90 DEGREES FROM ITS CLOSED POSITION. NONETHELESS, EXIT DOOR SHALL SWING TO THE FULLY OPEN POSITION.

5. WHERE A PAIR OF DOORS IS UTILIZED, AT LEAST ONE OF THE DOORS SHALL PROVIDE A CLEAR, UNOBSTRUCTED OPENING WIDTH OF 36" MIN. CLEAR WITH THE LEAF POSITIONED AT AN ANGLE OF 90 DEGREES FROM ITS CLOSED POSITION.

6. THE WIDTH OF THE LEVEL AREA ON THE PULL SIDE OF THE DOOR SHALL EXTEND 24" PAST THE STRIKE EDGE OF THE DOOR FOR EXTERIOR DOORS AND 18" PAST THE STRIKE EDGE FOR INTERIOR DOORS.

7. PROVIDE CLEAR SPACE OF 12" PAST STRIKE EDGE OF THE DOOR ON THE PUSH SIDE OF THE DOOR. IF THE DOOR IS EQUIPPED WITH BOTH A LATCH AND A CLOSER ON THE PUSH SIDE OF THE DOOR.

8. LATCHING AND LOCKING DOORS THAT ARE HAND ACTIVATED AND WHICH ARE IN A PATH OF TRAVEL, SHALL BE OPERABLE WITH A SINGLE EFFORT BY LEVER TYPE HARDWARE, PANIC BARS, PUSH-PULL ACTIVATING BARS, OR OTHER HARDWARE DESIGNED TO PROVIDE PASSAGE WITHOUT REQUIRING MORE THAN ONE HAND AND THE ABILITY TO GRASP, PINCH, OR TWIST THE OPENING HARDWARE. THE FORCE REQUIRED TO ACTIVATE OPERABLE PARTS SHALL BE 5 LBS MAX. LOCKED EXIT DOORS SHALL OPERATE AS ABOVE IN EGRESS DIRECTION. **SECTION 11B-404**

9. THE FLOOR OR LANDING SHALL BE NOT MORE THAN 1/2 INCH LOWER THAN THE THRESHOLD OF THE DOORWAY. CHANGE IN LEVEL BETWEEN 1/4 INCH AND 1/2 INCH SHALL BE BEVELED WITH A SLOPE NO GREATER THAN 1:2. **SECTION 11B-303**

10. THE BOTTOM 10 INCHES OF ALL DOORS EXCEPT AUTOMATIC AND SLIDING SHALL HAVE A SMOOTH UNINTERRUPTED SURFACE TO ALLOW THE DOOR TO BE OPENED BY A WHEELCHAIR FOOTREST WITHOUT CREATING A TRAP OR HAZARDOUS CONDITION. A 10INCH HIGH SMOOTH PANEL SHALL BE INSTALLED ON PUSH SIDE OF THE DOOR, WHICH WILL ALLOW THE DOOR TO BE OPENED BY A WHEELCHAIR FOOTREST WITHOUT CREATING A TRAP OR HAZARDOUS CONDITION. **SECTION 11B-404.2.10**

11. MAXIMUM EFFORT TO OPERATE DOORS SHALL NOT EXCEED 5 LBS FOR EXTERIOR DOORS AND 5 LBS FOR INTERIOR DOORS, SUCH PULL OR PUSH EFFORT BEING APPLIED AT RIGHT ANGLES TO HINGED DOORS AND AT THE CENTER PLANE OF SLIDING OR FOLDING DOORS. COMPENSATING DEVICES OR AUTOMATIC DOOR OPERATORS MAY BE UTILIZED TO MEET THE ABOVE STANDARDS. WHEN FIRE DOORS ARE REQUIRED, THE MAXIMUM EFFORT TO OPERATE THE DOOR MAY BE INCREASED TO THE MAXIMUM ALLOWABLE BY THE APPROPRIATE ADMINISTRATIVE AUTHORITY, NOT TO EXCEED 15 POUNDS. DOOR CLOSERS SHALL BE ADJUSTED SO THAT FROM AN OPEN POSITION OF 90 DEGREES, THE TIME REQUIRED TO MOVE THE DOOR TO A POSITION OF 12 DEGREES FROM THE LATCH IS 5 SECONDS MIN. CBC **SECTION 11B-404.2.9 & 11B-404.2.8.1**

SPACE ALLOWANCE & REACH RANGES:

1. IF THE CLEAR FLOOR SPACE ONLY ALLOWS FORWARD APPROACH TO AN OBJECT, THE MAXIMUM HIGH FORWARD REACH SHALL BE 48", SEE **FIGURE 11B-308.2.1**. THE MINIMUM LOW FORWARD REACH IS 15". IF THE HIGH FORWARD REACH IS OVER AN OBSTRUCTION, REACH AND CLEARANCES SHALL BE AS SHOWN IN **FIGURE 11B-308.2.2**.

2. IF THE CLEAR FLOOR SPACE ALLOWS PARALLEL APPROACH BY A PERSON IN A WHEELCHAIR, THE MAXIMUM HIGH SIDE REACH ALLOWED SHALL BE 48" AND THE LOW SIDE REACH SHALL BE NO LESS THAN 15" ABOVE THE FLOOR AS SHOWN IN **FIGURE 11B-308.3.1**. IF THE SIDE REACH IS OVER AN OBSTRUCTION, THE REACH AND CLEARANCES SHALL BE AS SHOWN IN **FIGURE 11B-308.3.2**.

CONTROLS & OPERATING MECHANISMS:

1. CONTROLS AND OPERATING MECHANISMS REQUIRED TO BE ACCESSIBLE SHALL COMPLY WITH THE REQUIREMENTS OF **SECTION 11B-309**

2. CLEAR FLOOR SPACE COMPLYING WITH SECTION **11B-305** THAT ALLOWS A FORWARD OR PARALLEL APPROACH BY A PERSON USING A WHEELCHAIR SHALL BE PROVIDED AT CONTROLS, DISPENSERS, RECEPTACLES, AND OTHER OPERABLE EQUIPMENT.

3. THE HIGHEST AND LOWEST OPERABLE PART OF ALL CONTROLS, DISPENSERS, RECEPTACLES, AND OTHER OPERABLE EQUIPMENT SHALL BE PLACED WITHIN 48" OF THE FLOOR BUT NOT LOWER THAN 15" IF FORWARD APPROACHED AND WITHIN 48" BUT NOT LOWER THAN 15" IF SIDE APPROACHED. ELECTRICAL AND COMMUNICATION SYSTEM RECEPTACLES ON WALLS SHALL BE MOUNTED NO LESS THAN 15" ABOVE THE FLOOR TO THE BOTTOM OF THE OUTLET BOX.

4. CONTROLS AND OPERATING MECHANISMS SHALL BE OPERABLE WITH THE ONE HAND AND SHALL NOT REQUIRE TIGHT GRASPING, PINCHING, OR TWISTING OF THE WRIST. THE FORCE REQUIRED TO ACTIVATE CONTROLS SHALL BE NO GREATER THAN 5 POUNDS OF FORCE PER **SECTION 11B-309.4.**

5. THE BOTTOM OF THE OUTLET BOX OF RECEPTACLE OUTLETS SHALL BE NOT LESS THAN 15 INCHES ABOVE THE FLOOR OR WORKING PLATFORM.

6. THE TOP OF THE OUTLET BOX OF SWITCHES INTENDED TO BE USED BY THE OCCUPANT OF THE ROOM OR AREA TO CONTROL LIGHTING AND RECEPTACLE OUTLETS, APPLIANCES, OR COOLING, HEATING AND VENTILATING EQUIPMENT SHALL NOT BE MORE THAN [illegible] FEET ABOVE THE FLOOR OR WORKING PLATFORM.

7. PER **SECTION 907[illegible]2.2**, THE HEIGHT OF THE MANUAL FIRE ALARM BOXES SHALL BE 42"-48" TO THE HIGHEST POINT OF ACTIVATING HANDLE.

GROUND AND FLOOR SURFACES:

1. GENERAL. GROUND AND FLOOR SURFACES ALONG ACCESSIBLE ROUTES AND IN ACCESSIBLE ROOMS AND SPACES, INCLUDING FLOOR, WALKS, RAMPS, STAIRS, AND CURB RAMPS, SHALL BE STABLE, FIRM AND SLIP RESISTANT, AND SHALL COMPLY WITH **SECTION 11B-302**.

CHANGES IN LEVEL GREATER THAN 1/2" HIGH SHALL BE ACCOMPLISHED BY MEANS OF A RAMP NO STEEPER THAN 1 VERTICAL TO 2 HORIZONTAL.

2. CARPET. IF CARPET OR CARPET TILE IS USED ON A GROUND OR FLOOR SURFACE, THAN IT SHALL BE SECURELY ATTACHED; HAVE A FIRM CUSHION, PAD OR BACKING OR NO CUSHION OR PAD; AND HAVE A LEVEL LOOP, TEXTURED LOOP, LEVEL-CUT PILE, OR LEVEL-CUT / UNCUT PILE TEXTURE. THE MAXIMUM PILE HEIGHT SHALL BE ½ INCH. EXPOSED EDGES OF CARPET SHALL BE FASTENED TO FLOOR SURFACES AND HAVE TRIM ALONG THE ENTIRE LENGTH OF THE EXPOSED EDGE. CARPET EDGE TRIM SHALL COMPLY WITH **SECTION 11B-302.2.**

3. OPENINGS IN FLOOR OR GROUND SURACE SHALL NOT ALLOW PASSAGE OF A SPHERE MORE THAN 1/2" IN DIAMETER. ELONGATED OPENINGS SHALL BE PLACED SO THAT THE LONG DIMENSION IS PERPENDICULAR TO THE DOMINANT DIRECTION OF TRAVEL.

4. IF A WALK CROSSES OR ADJOINS A VEHICULAR WAY, AND THE WALKING SURFACES ARE NOT SEPARATED BY CURBS, RAILINGS, OR OTHER ELEMENTS BETWEEN THE PEDESTRIAN AREAS AND VEHICULAR AREAS , THE BOUNDARY BETWEEN THE AREAS SHALL BE DEFINED BY A COUNTINOUS DETECTABLE WARNING COMPLYING WITH **11B-705.**

5. THE RUNNING SLOPE SHALL NOT EXCEED 1:20 AND CROSS SLOPE SHALL NOT EXCEED 1:48. FOR WALKING SURFACES THAT ARE PART OF AN ACCESSIBLE ROUTE.

CORRIDORS & AISLES, PROTRUDING OBJECTS, AND VERTICAL CLEARANCES:

1. WALKS, HALLS, CORRIDORS, PASSAGEWAYS, AISLES, OR OTHER CIRCULATION SPACES SHALL HAVE 96" MINIMUM CLEAR HEAD ROOM. ANY OBSTRUCTION THAT PROJECTS FROM A CEILING SHALL BE A MINIMUM OF 80" ABOVE THE WALKING SURFACE AS MEASURED FROM THE BOTTOM OF THE OBSTRUCTION.

2. OBJECTS WITH LEADING EDGES MORE THAN 27 INCHES AND NOT MORE THAN 80 INCHES ABOVE THE FINISH FLOOR OR GROUND SHALL PROTRUDE 4 INCHES MAXIMUM HORIZONTALLY INTO THE CIRCULATION PATH.

3. FREESTANDING OBJECTS ON POSTS OR PYLONS SHALL OVERHANG CIRCULATION PATHS 12 INCHES MAXIMUM WHEN LOCATED 27 INCHES MINIMUM AND 80 INCHES MAXIMUM ABOVE THE FINISH FLOOR OR GROUND. WHERE A SIGN OR OTHER OBSTRUCTION IS MOUNTED BETWEEN POSTS OR PYLONS AND THE CLEAR DISTANCE BETWEEN THE POSTS OR PYLONS IS GREATER THAN 12 INCHES, THE LOWEST EDGE OF SUCH SIGN OR OBSTRUCTION SHALL BE 27 INCHES MAXIMUM OR 80 INCHES MINIMUM ABOVE THE FINISH FLOOR OR GROUND.

4. VERTICAL CLEARANCE SHALL BE 80 INCHES HIGH MINIMUM. GUARDRAILS OR OTHER BARRIERS SHALL BE PROVIDED WHERE THE VERTICAL CLEARANCE IS LESS THAN 80 INCHES HIGH. THE LEADING EDGE OF SUCH GUARDRAIL OR BARRIER SHALL BE LOCATED 27 INCHES MAXIMUM ABOVE THE FINISH FLOOR OR GROUND.

5. DOOR CLOSERS AND DOOR STOPS SHALL BE PERMITTED TO BE 78 INCHES MINIMUM ABOVE THE FINISH FLOOR OR GROUND.

TOILET ROOM FIXTURES AND ACCESSORIES:

1. THE HEIGHT OF ACCESSIBLE WATER CLOSETS SHALL BE A MINIMUM OF 17 INCHES AND A MAXIMUM OF 19 INCHES MEASURED TO THE TOP OF THE TOILET SEAT.

2. PROVIDE 17" TO 18 INCHES FROM THE CENTERLINE OF THE WATER CLOSETS TO THE ADJACENT WALLS.

3. CLEARANCE AROUND THE WATER CLOSET SHALL BE 60" MINIMUM MEASURED PERPENDICULAR FROM THE SIDE WALL AND 56" MINIMUM MEASURED PERPINDICULAR FROM THE REAR WALL FOR WALL HUNG WATER CLOSETS AND 59" DEEP MINIMUM FOR FLOOR MOUNTED WATER CLOSETS..

4. A MINIMUM 60" WIDE AND 48" DEEP MANEUVERING SPACE SHALL BE PROVIDED IN FRONT OF THE WATER CLOSET.

5. FLUSH CONTROLS SHALL BE HAND OPERATED OR AUTOMATIC. HAND OPERATED CONTROLS SHALL BE LOCATED 44" MAXIMUM ABOVE THE FLOOR AND SHALL BE LOCATED ON THE OPEN SIDE OF THE WATER CLOSET COMPARTMENT. OPERABLE PARTS SHALL BE OPERABLE WITH ONE HAND AND SHALL NOT REQUIRE TIGHT GRASPING, PINCHING, OR TWISTING OF THE WRIST. THE FORCE REQUIRED TO ACTIVATE OPERABLE PARTS SHALL BE 5 LBS MAXIMUM.

6. URINALS SHALL BE STALL-TYPE OR WALL HUNG. WHERE ONE OR MORE WALL-HUNG URINALS ARE PROVIDED, AT LEAST ONE WITH AN ELONGATED RIM PROJECTING A MINIMUM OF 13 1/2" INCHES FROM THE WALL AND A MAXIMUM OF 17 INCHES ABOVE THE FLOOR SHALL BE PROVIDED. FLUSH CONTROLS SHALL BE HAND OPERATED OR AUTOMATIC. HAND OPERATED FLUSH CONTROLS SHALL COMPLY WITH SECTION 11B-309 EXCEPT THAT THE FLUSH CONTROL SHALL BE MOUNTED AT A MAXIMUM HEIGHT OF 44" (1118mm) ABOVE THE FINISH FLOOR. TOE CLEARANCE SHALL EXTEND 25" MAXIMUM UNDER AN ELEMENT.

7. LAVATORIES, WHEN LOCATED ADJACENT TO A SIDE WALL OR PARTITION, SHALL BE A MINIMUM OF 18 INCHES TO THE CENTERLINE OF THE FIXTURE. ALL LAVATORIES THAT ARE DESIGNATED TO BE ACCESSIBLE SHALL BE A MINIMUM 17 INCHES IN HORIZONTAL DEPTH AND MOUNTED WITH THE RIM OR COUNTER EDGE NO HIGHER THAN 34 INCHES ABOVE THE FINISHED FLOOR AND WITH VERTICAL CLEARANCE MEASURED FROM THE BOTTOM OF THE APRON OR THE OUTSIDE BOTTOM EDGE OF THE LAVATORY OF 29 INCHES REDUCING TO 27 INCHES AT A POINT LOCATED 8 INCHES BACK FROM THE FRONT EDGE. IN ADDITION, A MINIMUM 9 INCH HIGH TOE CLEARANCE MUST BE PROVIDED EXTENDING BACK TOWARD THE WALL TO A DISTANCE NO MORE THAN 6 INCHES FROM THE BACK WALL. THE TOE CLEARANCE SPACE MUST BE FREE OF EQUIPMENT OR OBSTRUCTIONS.

8. A CLEAR FLOOR SPACE 30 INCHES BY 48 INCHES COMPLYING WITH **SECTION 11B-305** SHALL BE PROVIDED IN FRONT OF A LAVATORY TO ALLOW FORWARD APPROACH. SUCH CLEAR FLOOR SPACE SHALL ADJOIN OR OVERLAP AN ACCESSIBLE ROUTE AND SHALL EXTEND A MAXIMUM OF 19 INCHES INTO KNEE AND TOE SPACE UNDERNEATH THE LAVATORY.

9. HOT WATER AND DRAIN PIPES ACCESSIBLE UNDER LAVATORIES SHALL BE INSULATED OR OTHERWISE COVERED. THERE SHALL BE NO SHARP OR ABRASIVE SURFACES UNDER LAVATORIES.

10. FAUCET CONTROLS AND OPERATING MECHANISMS SHALL BE OPERABLE WITH ONE HAND IN ACCORDANCE WITH THIS CHAPTER AND SHALL NOT REQUIRE TIGHT GRASPING, PINCHING OR TWISTING OF THE WRIST. THE FORCE REQUIRED TO ACTIVATE CONTROLS SHALL BE NO GREATER THAN 5 LBF. LEVER-OPERATED, PUSH-TYPE AND ELECTRONICALLY CONTROLLED MECHANISMS (PREFERABLE) ARE EXAMPLES OF ACCEPTABLE DESIGNS. SELF-CLOSING VALVES ARE ALLOWED IF THE FAUCET REMAINS OPEN FOR AT LEAST 10 SECONDS.

11. MIRRORS SHALL BE MOUNTED WITH THE BOTTOM EDGE OF THE REFLECTING SURFACE NO HIGHER THAN 40 INCHES FROM THE FLOOR.

12. WHERE TOWEL, SANITARY NAPKINS, WASTE RECEPTACLES, DISPENSERS, OTHER EQUIPMENT AND CONTROLS ARE PROVIDED, AT LEAST ONE OF EACH TYPE SHALL BE LOCATED ON AN ACCESSIBLE ROUTE, WITH ALL OPERABLE PARTS, INCLUDING COIN SLOTS, WITHIN 40 INCHES FROM THE FINISHED FLOOR AND SHALL COMPLY WITH **SECTION 11B-309**, CONTROLS AND OPERATING MECHANISMS.

13. TOILET TISSUE DISPENSERS SHALL BE LOCATED ON THE WALL 7" TO 9" IN THE FRONT EDGE OF THE TOILET BOWL MEASURED TO THE CENTERLINE OF THE DISPENSER, MOUNTED 1 1/2" MINIMUM BELOW THE GRAB BAR, AT A MINIMUM HEIGHT OF 19" MINIMUM TO THE OUTLET OF THE DISPENSER. DISPENSERS THAT CONTROL DELIVERY OR THAT DO NOT PERMIT CONTINUOUS PAPER FLOW SHALL NOT BE USED.

14. GRAB BARS, TUB AND SHOWER SEATS, FASTENERS AND MOUNTING DEVICES SHALL BE DESIGNED FOR A 250-LB POINT LOAD.

15. WHERE COAT HOOKS ARE PROVIDED IN TOILET ROOMS OR TOILET COMPARTMENTS AT LEAST ONE IN EACH AREA SHALL BE MOUNTED WITHIN 48" FROM THE FLOOR OR GROUND SURFACE.

16. AT LEAST ONE BABY CHANGE, WHEN PROVIDED, SHALL BE MOUNTED SO THAT THE COUNTER SURFACE, WHEN OPEN, IS NOT MORE THAN 34" ABOVE THE FINISH FLOOR AND THE HANDLE, WHEN CLOSED, IS NO HIGHER THAN 48" ABOVE THE FINISH FLOOR. THE COUNTER SURFACE SHALL PROVIDE 27" HIGH KNEE CLEARANCE WHEN FULLY OPEN.
BABY CHANGING TABLES SHALL NOT OBSTRUCT THE REQUIRED WIDTH OF AN ACCESSIBLE ROUTE, OR BE LOCATED IN A TOILET COMPARTMENT.

17. RESTROOM DISPENSERS AND ACCESSORIES SHALL BE MOUNTED SO THEY DO NOT PROTRUDE INTO THE ACCESSIBLE ROUTES GREATER THAN 4".

GRAB BAR:

1. GRAB BARS FOR WATER CLOSETS NOT LOCATED WITHIN A COMPARTMENT SHALL COMPLY WITH **SECTION 11B-604.5** AND SHALL BE PROVIDED ON THE SIDE WALL CLOSEST TO THE WATER CLOSET AND ON THE REAR WALL. GRAB BARS FOR WATER CLOSETS LOCATED WITHIN AN ACCESSIBLE COMPARTMENT SHALL COMPLY WITH **SECTION 11B-604.8.1.5** AND SHALL BE PROVIDED ON THE SIDE WALL CLOSEST TO THE WATER CLOSET AND ON THE REAR WALL. GRAB BARS FOR WATER CLOSETS LOCATED WITHIN AMBULATORY ACCESSIBLE COMPARTMENTS SHALL COMPLY WITH **SECTION 11B-604.8.2.3** AND SHALL BE PROVIDED ON BOTH SIDES OF THE COMPARTMENT.

2. THE DIAMETER OR WIDTH OF THE GRIPPING SURFACES OF A GRAB BAR SHALL BE 1-1/4" TO 2" OR THE SHAPE SHALL PROVIDE AN EQUIVALENT GRIPPING SURFACE. GRAB BARS SHALL NOT PROJECT MORE THAN 3" INTO ANY REQUIRED CLEAR SPACES.

3. IF THE GRAB BARS ARE MOUNTED ADJACENT TO A WALL, THE SPACE BETWEEN THE WALL AND THE GRAB BARS SHALL BE 1-1/2 INCHES. NO OBJECT TO BE LOCATED WITH IN 1-1/2" BELOW OR 12" ABOVE GRAB BARS.

4. A GRAB BAR AND ANY WALL OR OTHER SURFACE ADJACENT TO IT, SHALL BE FREE OF ANY SHARP OR ABRASIVE ELEMENTS.

5. EDGES SHALL HAVE A MINIMUM RADIUS OF 1/8 INCH.

6. THE STRUCTURAL STRENGTH OF GRAB BARS, TUB AND SHOWER SEATS, FASTENERS, AND MOUNTING DEVICES SHALL MEET THE FOLLOWING SPECIFICATIONS.

6A. BENDING STRESS IN A GRAB BAR OR SEAT INDUCED BY THE MAXIMUM BENDING MOMENT FROM THE APPLICATION OF A 250-LB POINT LOAD SHALL BE LESS THAN THE ALLOWABLE STRESS FOR THE MATERIAL OF THE GRAB BAR OR SEAT.

6B. SHEAR STRESS INDUCED IN A GRAB BAR OR SEAT BY THE APPLICATION OF A 250-LB POINT LOAD SHALL BE LESS THAN THE ALLOWABLE SHEAR STRESS FOR THE MATERIAL OF THE GRAB BAR OR SEAT, AND ITS MOUNTING BRACKET OR OTHER SUPPORT IS CONSIDERED TO BE FULLY RESTRAINED, THEN DIRECT AND TORSIONAL SHEAR STRESSES SHALL NOT EXCEED THE ALLOWABLE SHEAR STRESS.

6C. SHEAR FORCE INDUCED IN FASTENER OR MOUNTING DEVICE FROM THE APPLICATION OF A 250-LB POINT LOAD SHALL BE LESS THAN THE ALLOWABLE LATERAL LOAD OF EITHER THE FASTENER OR MOUNTING DEVICE OR THE SUPPORTING STRUCTURE, WHICHEVER HAS THE SMALLER ALLOWABLE LOAD.

6D. TENSILE FORCE INDUCED IN A FASTENER BY A DIRECT TENSION FORCE OF A 250-LB POINT LOAD, PLUS THE MAXIMUM MOMENT FROM THE APPLICATION OF A 250-LB POINT LOAD, SHALL BE LESS THAN THE ALLOWABLE WITHDRAWAL LOAD BETWEEN THE FASTENER AND SUPPORTING STRUCTURE.

6E. GRAB BARS SHALL NOT ROTATE WITHIN THEIR FITTINGS.

SIGNS & IDENTIFICATION:

1. CHARACTERS SHALL BE SELECTED FORM FONTS WHERE THE WIDTH OF THE UPPERCASE LETTER "O" IS 60% MINIMUM AND 110% MAXIMUM OF THE HEIGHT OF THE UPPERCASE LETTER "I".

2. CHARACTERS AND NUMBERS ON SIGNS SHALL CONTRAST WITH THEIR BACKGROUND, EITHER LIGHT CHARACTERS ON A DARK BACKGROUND OR DARK CHARACTERS ON A LIGHT BACKGROUND.

3. CHARACTERS AND NUMBER ON SIGNS SHALL BE SIZED ACCORDING TO THE VIEWING DISTANCE FROM WHICH THEY ARE TO BE READ. THE MINIMUM HEIGHT IS MEASURED USING AN UPPER CASE I. LOWER CASE CHARACTERS ARE PERMITTED. FOR SIGNS SUSPENDED OR PROJECTED ABOVE THE FINISHED FLOOR IN COMPLIANCE WITH **SECTION 11B-703.5.5-6.**

4. CONTRACTED GRADE 2 BRAILLE SHALL BE USED WHEREVER BRAILLE SYMBOLS ARE SPECIFICALLY REQUIRED IN OTHER PORTIONS OF THESE REGULATION. DOTS SHALL BE 1/10" ON CENTERS IN EACH CELL WITH 2/10" SPACE BETWEEN CELLS. DOTS SHALL BE RAISED A MINIMUM OF 1/40" ABOVE THE BACKGROUND. THE INDICATION OF UPPERCASE LETTERS SHALL ONLY BE USED BEFORE THE FIRST WORD OF SENTENCES, PROPER NOUNS AND NAMES, INDIVIDUAL LETTER OF THE ALPHABET, INITIALS, AND ACRONYMS.

4A. ALL BUILDING ENTRANCES THAT ARE ACCESSIBLE TO AND USABLE BY PERSONS WITH DISABILITIES AND AT EVERY MAJOR JUNCTION ALONG OR LEADING TO AN ACCESSIBLE ROUTE OF TRAVEL SHALL BE IDENTIFIED WITH A SIGN DISPLAYING THE INTERNATIONAL SYMBOL OF ACCESSIBILITY AND WITH ADDITIONAL DIRECTIONAL SIGNS, AS REQUIRED, TO BE VISIBLE TO PERSONS ALONG APPROACHING PEDESTRIAN WAYS.

ACCESSIBLE MEANS OF EGRESS AND COMMUNICATION ELEMENTS

1. TACTILE SIGNS CONTAINING BRAILLE SHALL BE PROVIDED PER SECTION 11B-703.

2. TACTILE EXIT SIGNS SHALL BE REQUIRED AT THE FOLLOWING LOCATIONS:

3. EACH GRADE-LEVEL EXTERIOR EXIT DOOR SHALL BE IDENTIFIED BY A TACTILE EXIT WITH THE WORD, "EXIT."

4. EACH EXIT DOOR THAT LEADS DIRECTLY TO A GRADE-LEVEL EXTERIOR EXIT BY MEANS OF A STAIRWAY OR RAMP SHALL BE IDENTIFIED BY A TACTILE EXIT SIGN WITH THE FOLLOWING WORDS AS APPROPRIATE:

A. "EXIT STAIR DOWN"
B. "EXIT RAMP DOWN'
C. "EXIT STAIR UP"
D. "EXIT RAMP UP"

5. EACH EXIT DOOR THAT LEADS DIRECTLY TO A GRADE-LEVEL EXTERIOR EXIT BY MEANS OF AN EXIT ENCLOSURE OR AN EXIT PASSAGEWAY SHALL BE IDENTIFIED BY A TACTILE EXIT SIGN WITH THE WORDS, "EXIT ROUTE."

6. EACH EXIT ACCESS DOOR FROM AN INTERIOR ROOM OR AREA TO A CORRIDOR OR HALLWAY THAT IS REQUIRED TO HAVE A VISUAL EXIT SIGN SHALL BE IDENTIFIED BY A TACTILE EXIT SIGN WITH THE WORDS, "EXIT ROUTE."

7. EACH EXIT DOOR THROUGH A HORIZONTAL EXIT SHALL BE IDENTIFIED BY A SIGN WITH THE WORDS, "TO EXIT."

8. PERMANENT ROOM SIGNAGE: (2013 CBC) - WHEN RAISED CHARACTERS ARE REQUIRED OR WHEN PICTORIAL SYMBOLS (PICTOGRAMS) ARE USED ON SUCH SIGNS, THEY SHALL CONFORM TO THE FOLLOWING REQUIREMENTS:

9. CHARACTER TYPE: CHARACTERS ON SIGNS SHALL BE RAISED 1/32 INCH MINIMUM AND SHALL BE SANS SERIF UPPERCASE CHARACTERS ACCOMPANIED BY GRADE 2 BRAILLE COMPLYING WITH **SECTION 11B-703.2.**

10. CHARACTER HEIGHT: RAISED CHARACTERS SHALL BE A MINIMUM OF 5/8 INCH AND A MAXIMUM OF 2 INCHES HIGH.

11. PICTORIAL SYMBOL SIGNS (PICTOGRAMS): PICTORIAL SYMBOLS SIGNS (PICTOGRAMS) SHALL BE ACCOMPANIED BY THE VERBAL DESCRIPTION PLACED DIRECTLY BELOW THE PICTOGRAM. THE OUTSIDE DIMENSION OF THE PICTOGRAM FIELD SHALL BE A MINIMUM OF 6 INCHES IN HEIGHT.

12. CHARACTER POSITION: CHARACTERS AND BRAILLE SHALL BE IN A HORIZONTAL FORMAT. BRAILLE SHALL BE PLACED A MINIMUM OF 3/8 INCH AND A MAXIMUM OF 1/2 INCH DIRECTLY BELOW THE TACTILE CHARACTERS AND 3/8" MINIMUM FROM RAISED BORDERS AND DECORATIVE ELEMENTS; FLUSH LEFT OR CENTERED. WHEN TACTILE TEXT IS MULTILINED, ALL BRAILLE SHALL BE PLACED TOGETHER BELOW ALL LINES OF TACTILE TEXT.

13. MOUNTING LOCATION AND HEIGHTS. WHERE PERMANENT IDENTIFICATION IS PROVIDED FOR ROOMS AND SPACES, RAISED LETTERS SHALL BE ACCOMPANIED BY BRAILLE IN CONFORMANCE WITH **SECTION 11B-703.4.** SIGNS SHALL BE INSTALLED ON THE WALL ADJACENT TO THE LATCH OUTSIDE THE DOOR. WHERE THERE IS NO WALL SPACE ON THE LATCH SIDE, INCLUDING AT DOUBLE LEAF FLOORS, SIGNS SHALL BE PLACED ON NEAREST ADJACENT WALL, PREFERABLY ON THE RIGHT. MOUNTING HEIGHT SHALL BE LOCATED MINIMUM 48 INCHES ABOVE THE FINISH FLOOR OR GROUND SURFACE MEASURED FROM THE BASELINE OF THE LOWEST BRAILLE CELLS AND 60 INCHES MAXIMUM ABOVE THE FINISH FLOOR OR GROUND SURFACE, MEASURED TO THE BASELINE OF THE HIGHEST LINE OF RAISED CHARACTERS.

14. SIGNS CONTAINING TACTILE CHARACTERS SHALL BE LOCATED SO THAT A CLEAR FLOOR SPACE OF 18 INCHES MINIMUM BY 18 INCHES MINIMUM, CENTERED ON THE TACTILE CHARACTERS IS PROVIDED BEYOND THE ARCH OR ANY DOOR SWING BETWEEN THE CLOSED POSITION AND 45 DEGREE OPEN POSITION.

SERVICE COUNTERS AND WORK SURFACES

1. WHERE A SINGLE SERVICE COUNTER CONTAINS MORE THAN ONE TRANSACTION, SUCH AS WITH MULTIPLE TELLER WINDOWS OR SALES COUNTERS WITH MULTIPLE CASH REGISTER STATIONS, AT LEAST 5 PERCENT, BUT NEVER LESS THAN ONE OF EACH TYPE OF STATION OF COUNTER SHALL BE ACCESSIBLE..

2. SERVICE COUNTERS SHALL COMPLY WITH SECTION 11B-904.1.1 OR 11B-904.4.2. THE ACCESSIBLE PORTION OF THE COUNTER TOP SHALL EXTEND THE SAME DEPTH AS THE SERVICE COUNTER TOP.

3. A PORTION OF THE SERVICE COUNTER SURFACE THAT IS 36 INCHES LONG MINIMUM AND 34" INCHES HIGH MAXIMUM ABOVE THE FINISH FLOOR SHALL BE PROVIDED. A CLEAR FLOOR OR GROUND SPACE COMPLYING WITH SECTION 11B-305 SHALL BE POSITIONED FOR A PARALLEL APPROACH ADJACENT TO THE 36 INCH MINIMUM LENGTH OF COUNTER. IF A FORWARD APPROACH IS INTENDED, KNEE CLEARANCE MUST BE PROVIDED.

4. HEIGHT OF WORK SURFACES: THE TOPS OF TABLES AND COUNTERS SHALL BE 28 INCHES TO 34 INCHES FROM THE FLOOR OR GROUND.

APPROVAL

CLIENT

SAN BERNARDINO COUNTY
PROJECT AND FACILITIES
MANAGEMENT DEPARTMENT

385 NORTH ARROWHEAD AVENUE, 3RD FLOOR SAN BERNARDINO, CA 92415-0184

PROJECT NAME

REPLACEMENT DEAERATOR

PROJECT ADDRESS
400 N PEPPER AVE, COLTON, CA 92324

OSHPD/HCAI PROJECT NO.
S230562-36-00

FACILITY NO.
17282

BUILDING NO.
BLD-00075 CENTRAL PLANT

ENGINEER/ARCHITECT

IDS GROUP

1 PETERS CANYON ROAD, SUITE 130
IRVINE, CA. 92606
TEL: 949-387-8500, FAX: 949-387-0800

STAMP

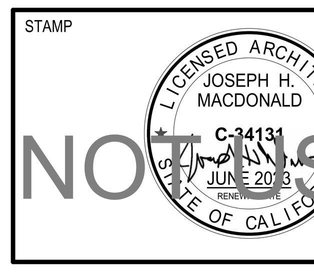

STAMP

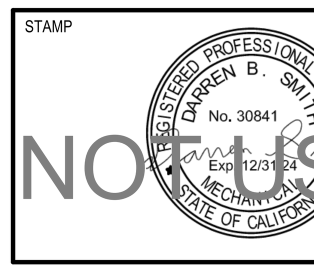

ISSUE

REV.	DESCRIPTION	DATE
	HCAI SUBMITTAL	03/01/23
	HCAI BC 1	06/13/23
	HCAI BC 2	07/28/23

PROJECT IDENTIFICATION

THE ORIGINAL SIZE OF THIS SHEET IS 30" X 42"

THESE DRAWINGS AND SPECIFICATIONS ARE THE PROPERTY AND COPYRIGHT OF IDS GROUP AND SHALL NOT BE USED ON ANY OTHER PROJECT OR LOCATIONS EXCEPT AS DESCRIBED ON THE DRAWINGS, WITHOUT THE WRITTEN AGREEMENT WITH IDS GROUP.

IDS PROJECT NO.	22X66.02
DRAWN BY	CKC
CHECKED BY	CKC
APPROVED BY	JHM

SHEET TITLE

ACCESSIBILITY COMPLIANCE NOTES NOT USED

SHEET NUMBER

G-010

SHEET NO. OF

IDS GROUP - FILE LOCATION: 8/4/2023 2:35:49 PM C:\Users\chris.corbett\Documents\22X066.02_ARCH_R20_chris.corbettRXSMS.rvt

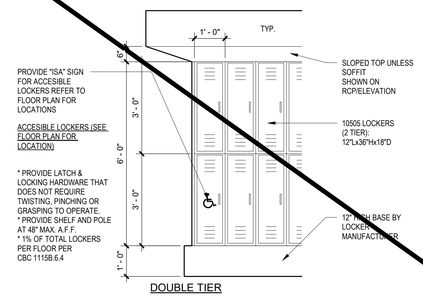

DOUBLE TIER

ACCESSIBLE LOCKER LEGEND - 2 TIER | 1/2" = 1'-0" | D1

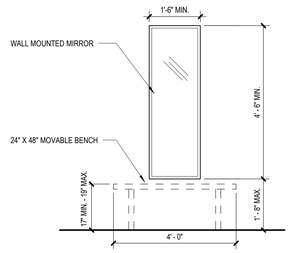

BENCH AND FULL HEIGHT MIRROR | 1/2" = 1'-0" | D2

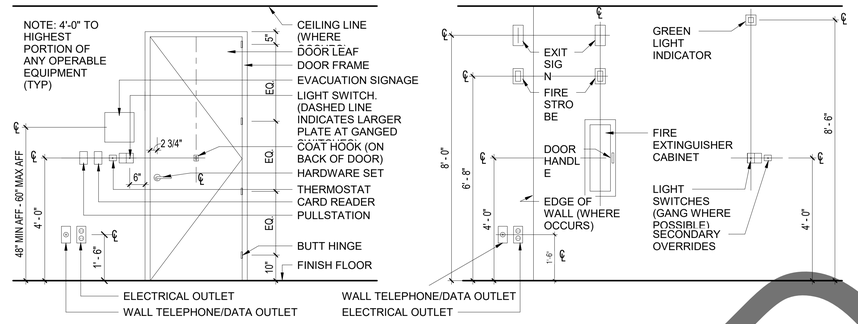

NOTE:
TOP OF SWITCH TO BE AT 48" A.F.F. MAXIMUM. CENTER ALL OTHER DEVICES ON CENTERLINE OF LIGHT SWITCHES. TOP OF SWITCH TO BE AT 40" A.F.F. MAXIMUM WHERE SWITCH IS LOCATED ABOVE A COUNTER. INSTALL ELECTRICAL AND TELEPHONE WALL OUTLETS AND SWITCH PLATES TO NEAREST STUD LOCATION AS SCALED ON PLAN, UNLESS DIMENSIONED OTHERWISE.

ABAAS 308.2.1. UNOBSTRUCTED FORWARD REACH

DEVICE MOUNTING HEIGHTS | 1/2" = 1'-0" | D4

PERMANENT ROOM IDENTIFICATION SIGNAGE W/ BRAILLE ON STRIKE SIDE OF DOOR (SEE DETAIL)

DOOR MOUNTED RESTROOM SIGNAGE IN EQUILATERAL TRIANGLE, 1/4" THICK W/EDGES, 12" LONG, 60" HIGH A.F.F. POINTING UPWARDS (SEE DETAIL)

DOOR MOUNTED RESTROOM SIGNAGE IN 12" DIAMETER CIRCLE, 1/4" THICK W/EDGES, 60" HIGH A.F.F. (SEE DETAIL)

NOTES:
1. LEVER-STYLE HARDWARE ON BOTH SIDES OF DOORS.
2. ALUMINUM DOOR-MOUNTED RESTROOM SIGNAGE (MATTE FINISH ON BLACK BACKGROUND)
3. SIGNAGE IS LOCATED CENTERED IN DOOR LEAF AT 60" ABOVE FINISHED FLOOR.

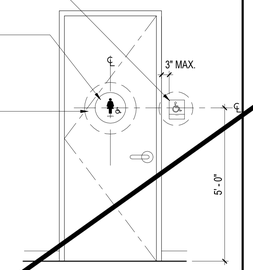

RESTROOM DOOR

ACCESSIBLE RESTROOM SIGNAGE | 1/2" = 1'-0" | D5

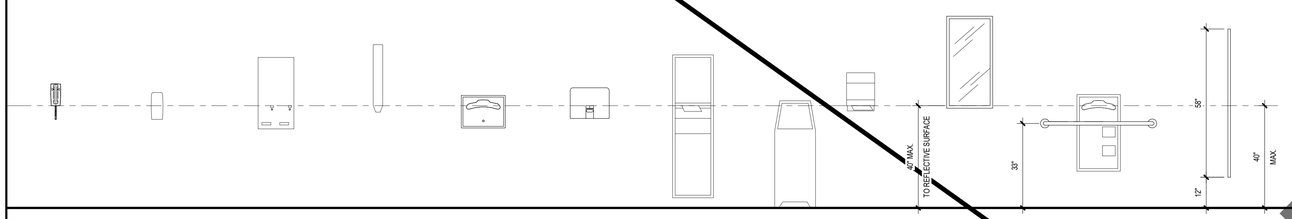

TELEPHONE | SOAP DISPENSER | SANITARY NAPKINS | CUPS | SEATCOVER DISPENSER | HAND DRYER | TOWELS & TRASH | WASTE | TOWELS | MIRROR | GRAB BAR WITH COMBINATION UNIT | TYPICAL PARTITION

ACCESSORIES - WHERE TOWEL OR SANITARY NAPKIN DISPENSERS, WASTE RECEPTACLES, OR OTHER ACCESSORIES ARE PROVIDED IN TOILET FACILITIES, AT LEAST ONE OF EACH TYPE SHALL BE LOCATED ON AN ACCESSIBLE ROUTE. ALL OPERABLE PARTS, INCLUDING COIN SLOTS, SHALL BE 40 INCHES MAXIMUM ABOVE THE FINISH FLOOR.CBC FIGURE 11B-603.5

ACCESSIBLE WALL MOUNTED ACCESSORIES | 1/2" = 1'-0" | C3

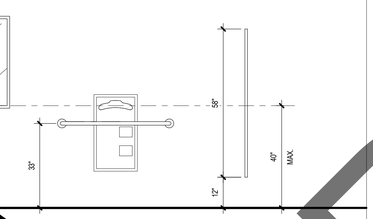

BRAILLE DOT DIAMETER = .059" MIN. TO .063" MAX. ROUNDED OR DOMED DOT (ACCEPTABLE) SQUARE DOT (NOT ACCEPTABLE)

NOTE: REFER TO SECTION 10 14.00 OF SPECIFICATIONS FOR THE LISTING OF SIGN TYPE W/ TACTILE BRAILLE.

1. TACTILE SIGNAGE SHALL COMPLY W/ CBC 11B-703 & ADAAG 703.

2. CHARACTER TYPE: CHARACTERS ON SIGNS SHALL BE RAISED 1/32 INCH MIN. AND SHALL BE SANS SERIF UPPERCASE CHARACTERS ACCOMPANIED BY GRADE 2 BRAILLE (SEE NOTE 6 BELOW).

3. CHARACTER SIZE: RAISED CHARACTERS SHALL BE A MIN. OF 5/8" AND A MAX. OF 2 INCHES HIGH.

4. FINISH AND CONTRAST: CONTRAST BETWEEN CHARACTERS/SYMBOLS AND THEIR BACKGROUND MUST BE 70% MIN. AND HAVE A NON-GLARE FINISH.

5. PROPORTION: CHARACTERS SHALL BE SELECTED FROM FONTS WHERE THE WIDTH OF THE UPPERCASE LETTER "O" IS 60% MIN. AND 110% MAX. OF THE HEIGHT OF THE UPPERCASE LETTER "I".

6. BRAILLE: CALIFORNIA CONTRACTED GRADE 2 BRAILLE SHALL BE USED WHEREVER BRAILLE IS REQUIRED IN OTHER PORTIONS OF THESE STANDARDS. DOTS SHALL BE 1/10 INCH ON CENTER IN EACH CELL WITH 3/10 INCH SPACE BETWEEN CORRESPONDING DOTS IN ADJACENT CELLS (MEASURED FROM THE FIRST COLUMN OF DOTS IN THE FIRST CELL TO THE FIRST COLUMN OF DOTS IN THE SECOND CELL). DOTS SHALL BE RAISED A MIN. OF 1/40 INCH ABOVE THE BACKGROUND. THE INDICATION OF UPPERCASE LETTERS SHALL ONLY BE USED BEFORE THE FIRST WORD OF SENTENCES, PROPER NOUNS AND NAMES, INDIVIDUAL LETTERS OF THE ALPHABET, INITIALS, AND ACRONYMS.

ACCESSIBLE TACTILE SIGNAGE/BRAILLE | NTS | C4

TYP. RESTROOM SIGNAGE

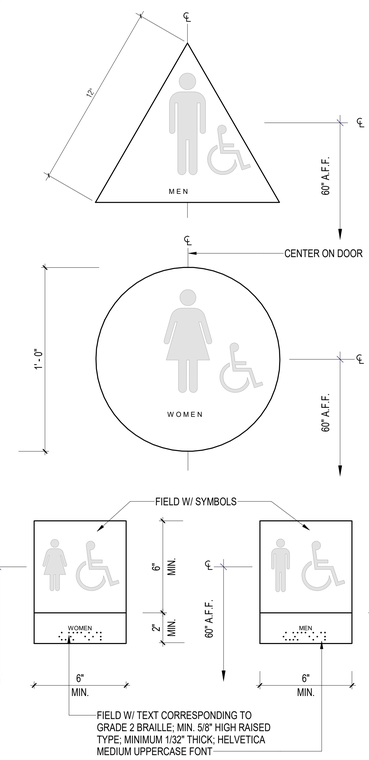

NOTE: PICTORIAL SYMBOL SIGNS SHALL BE ACCOMPANIED BY THE EQUIVALENT WRITTEN DESCRIPTION PLACED DIRECTLY BELOW THE PICTOGRAM. THE BORDER DIMENSION OF ANY PICTOGRAM SHALL BE A MINIMUM OF 6" IN HEIGHT. TOILET ROOM SIGNS SHALL BE 1/4" THICK MATERIAL AND SHALL BE A CONTRASTING COLOR TO THE DOOR AND BACKGROUND.

ACCESSIBILE RESTROOM SIGNAGE | 3" = 1'-0" | B5

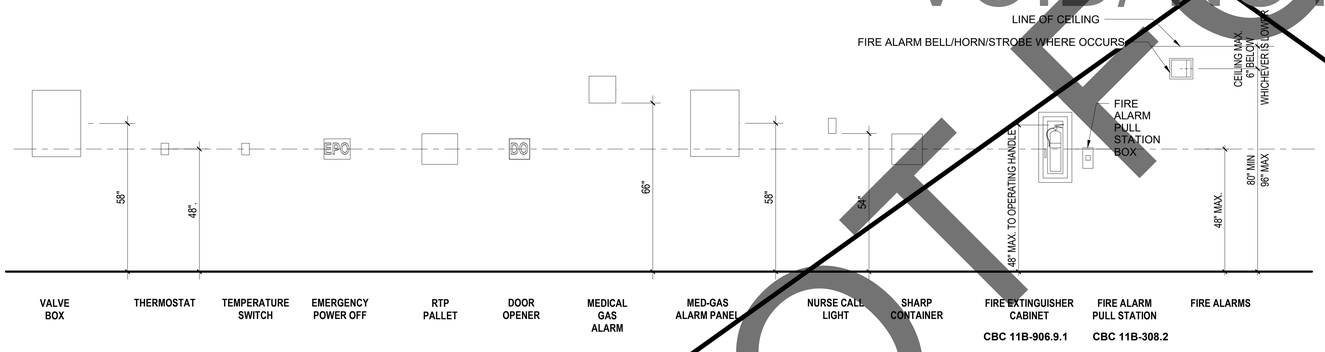

VALVE BOX | THERMOSTAT | TEMPERATURE SWITCH | EMERGENCY POWER OFF | RTP PALLET | DOOR OPENER | MEDICAL GAS ALARM | MED-GAS ALARM PANEL | NURSE CALL LIGHT | SHARP CONTAINER | FIRE EXTINGUISHER CABINET (CBC 11B-906.9.1) | FIRE ALARM PULL STATION (CBC 11B-308.2) | FIRE ALARMS

ACCESSIBLE MOUNTING HEIGHTS | 1/2" = 1'-0" | B4

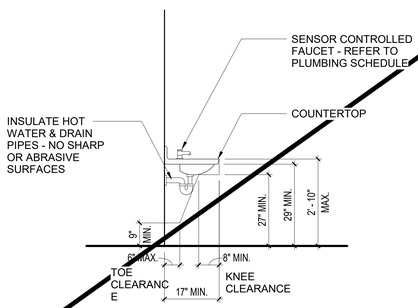

CBC 11B-306.2

ACCESSIBLE LAVATORY/SINK | 1/2" = 1'-0" | A1

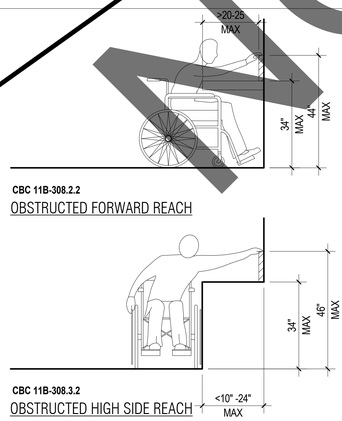

CBC 11B-308.2.2
OBSTRUCTED FORWARD REACH

CBC 11B-308.3.2
OBSTRUCTED HIGH SIDE REACH

OBSTRUCTED REACH5 | 1/2" = 1'-0" | A2

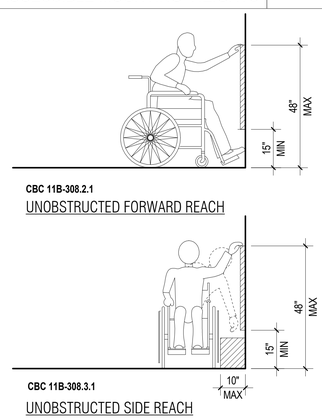

CBC 11B-308.2.1
UNOBSTRUCTED FORWARD REACH

CBC 11B-308.3.1
UNOBSTRUCTED SIDE REACH

UNOBSTRUCTED REACH5 | 1/2" = 1'-0" | A3

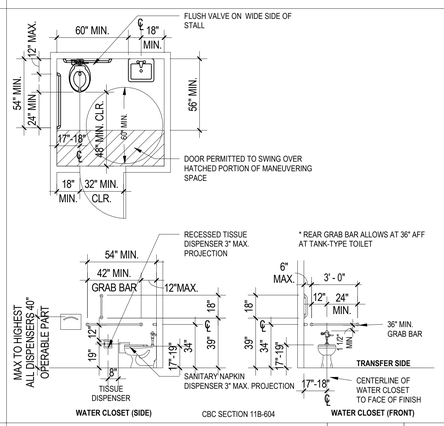

ACCESSIBLE TOILET FACILITIES | 1/4" = 1'-0" | A4

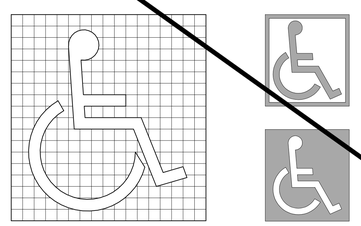

PROPORTIONS | DISPLAY CONDITIONS

CBC FIGURE 11B-703.7.2.1

INTERNATIONAL ACCESSIBILITY SYMBOL5 | N.T.S. | A5

VOID/NOT USED
NOT FOR BID

APPROVAL

CLIENT

SAN BERNARDINO COUNTY

SAN BERNANDINO COUNTY
PROJECT AND FACILITIES MANAGEMENT DEPARTMENT

385 NORTH ARROWHEAD AVENUE, 3RD FLOOR SAN BERNARDINO, CA 92415-0184

PROJECT NAME

REPLACEMENT DEAERATOR

PROJECT ADDRESS
400 N PEPPER AVE, COLTON, CA 92324

OSHPD/HCAI PROJECT NO.
S230562-36-00

FACILITY NO.
17282

BUILDING NO.
BLD-00075 CENTRAL PLANT

ENGINEER/ARCHITECT

IDS

IDS GROUP

1 PETERS CANYON ROAD, SUITE 130
IRVINE, CA. 92606
TEL: 949-387-8500, FAX: 949-387-0800

STAMP

LICENSED ARCHITECT JOSEPH H. MACDONALD C-34131 JUNE 20, 2023 STATE OF CALIFORNIA
NOT USED

STAMP

REGISTERED PROFESSIONAL ENGINEER DARREN B. SMITH No. 30841 Exp. 12/31/24 MECHANICAL STATE OF CALIFORNIA
NOT USED

ISSUE

REV.	DESCRIPTION	DATE
	HCAI SUBMITTAL	03/01/23
	HCAI BC 1	06/13/23
	HCAI BC 2	07/28/23

PROJECT IDENTIFICATION

THE ORIGINAL SIZE OF THIS SHEET IS 30" X 42"

THESE DRAWINGS AND SPECIFICATIONS ARE THE PROPERTY AND COPYRIGHT OF IDS GROUP AND SHALL NOT BE USED ON ANY OTHER PROJECT OR LOCATIONS EXCEPT AS DESCRIBED ON THE DRAWINGS, WITHOUT THE WRITTEN AGREEMENT WITH IDS GROUP.

IDS PROJECT NO.	22X66.02
DRAWN BY	CKC
CHECKED BY	CKC
APPROVED BY	JHM

SHEET TITLE

ACCESSIBLE FIXTURES AND SIGNAGE NOT USED

SHEET NUMBER

G-011

SHEET NO. OF

IDS GROUP - FILE LOCATION: 8/4/2023 2:36:16 PM C:\Users\chris.corbett\Documents\22X066.02_ARCH_R20_chris.corbettRXSM5.rvt

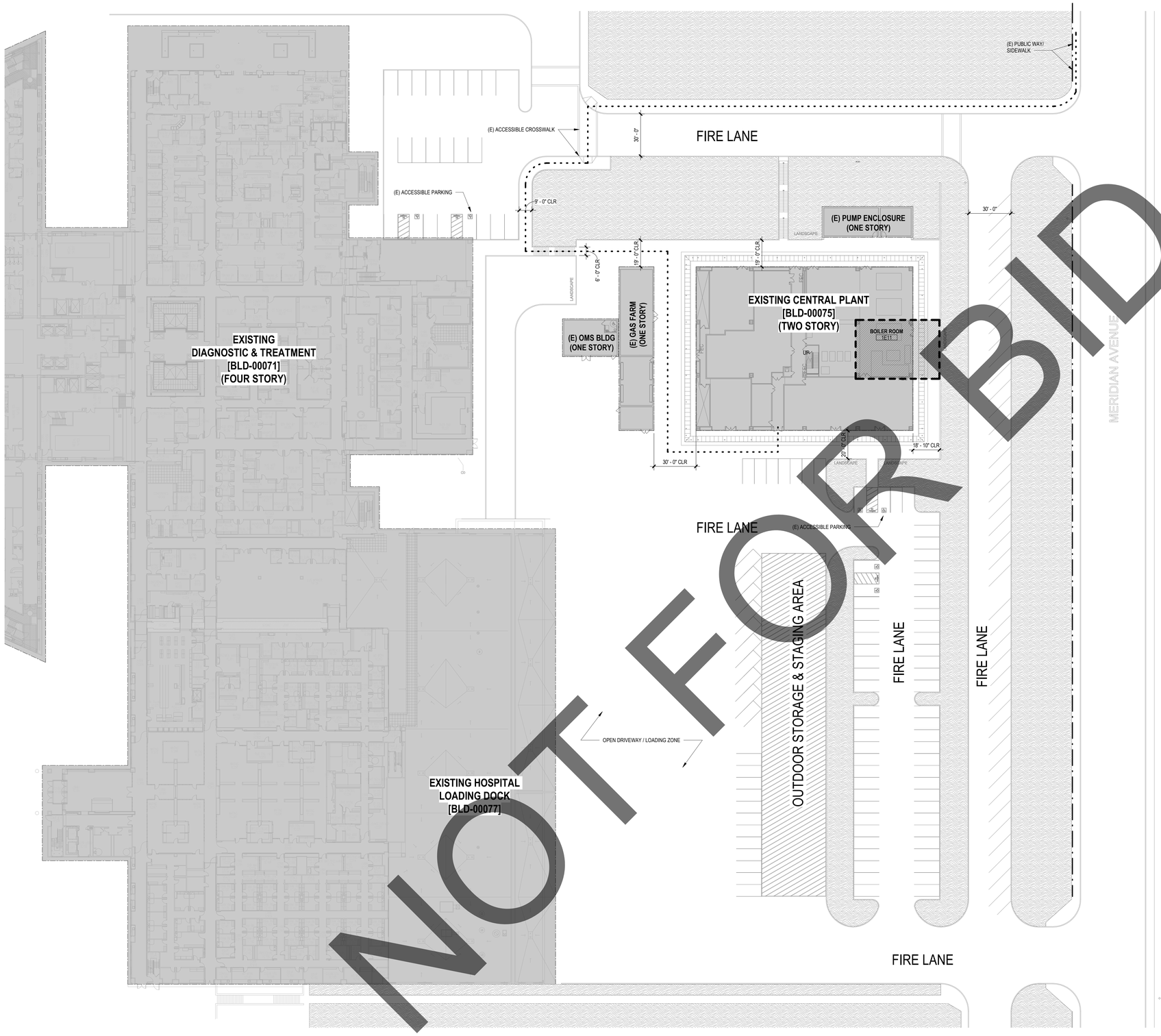

NOT FOR BID

SITE LEGEND

- PROPERTY LINE
- PATH OF TRAVEL
- STREET CENTERLINE
- EXISTING BUILDING
- AREA OF WORK

PATH OF TRAVEL DEFINITION

PATH OF TRAVEL (P.O.T.) AS INDICATED IS A COMMON BARRIER FREE ACCESS ROUTE WITHOUT ANY ABRUPT VERTICAL CHANGES. EXCEEDING 1/2" BEVELED AT 1:2 MAXIMUM SLOPE, EXCEPT THAT LEVEL CHANGES DO NOT EXCEED 1/4" VERTICAL AND AT LEAST 48" WIDE.

THE CROSS SLOPE DOES NOT EXCEED 2% AND SLOPE IN THE DIRECTION OF TRAVEL AND IS LESS THAN 5% UNLESS OTHERWISE INDICATED.

(P.O.T.) SHALL BE MANTAINED FREE OF OVERHANGING OBSTRUCTIONS TO 80" MINIMUM (1133B.8.2) AND PROTRUDING OBJECTS GREATER THAN 4" PROJECTION FROM WALL AND ABOVE 27" AND LESS THAN 80" (1133B.8.6).

0' 30' 60'

N

CODE ANALYSIS SITE PLAN | 1" = 30'-0" | 1

APPROVAL

REVIEWED IN ACCORDANCE WITH THE REQUIREMENTS OF T24, CCR
APPROVED
Department of Health Care Access & Information
Office of Statewide Hospital Planning & Development
6/9/2023, 7:23:46 AM
S230562-36-00
Allen Cheng

FOR REFERENCE ONLY

CLIENT

SAN BERNARDINO COUNTY

SAN BERNANDINO COUNTY
PROJECT AND FACILITIES
MANAGEMENT DEPARTMENT

385 NORTH ARROWHEAD AVENUE, 3RD FLOOR SAN BERNARDINO, CA 92415-0184

PROJECT NAME

ARMC DEAERATOR #1 REPLACEMENT

PROJECT NO.
WBSE # 10.10.0847
CIP # 20-011
HCAI # S230562-36-00

FACILITY NO.
17282

BUILDING NO.
BLD-00075 CENTRAL PLANT

400 N. PEPPER AVENUE
COLTON, CA 92324-1801

ENGINEER/ARCHITECT

IDS

IDS GROUP

1 PETERS CANYON ROAD, SUITE 130
IRVINE, CA 92606
TEL: 949-387-8500, FAX: 949-387-0800

STAMP

LICENSED ARCHITECT
JOSEPH H. MACDONALD
C-34137
JUNE 2023
REGISTRATION DATE
STATE OF CALIFORNIA

STAMP

REGISTERED PROFESSIONAL ENGINEER
DARREN B. SMITH
No. 30841
Exp. 12/31/24
MECHANICAL
STATE OF CALIFORNIA

ISSUE

REV.	DESCRIPTION	DATE
	HCAI SUBMITTAL	03/01/23
A	HCAI BC 1	06/13/23
B	HCAI BC 2	07/28/23

PROJECT IDENTIFICATION

THE ORIGINAL SIZE OF THIS SHEET IS 30" X 42"

THESE DRAWINGS AND SPECIFICATIONS ARE THE PROPERTY AND COPYRIGHT OF IDS GROUP AND SHALL NOT BE USED ON ANY OTHER PROJECT OR LOCATIONS EXCEPT AS DESCRIBED ON THE DRAWINGS, WITHOUT THE WRITTEN AGREEMENT WITH IDS GROUP.

IDS PROJECT NO.	22X66.02
DRAWN BY	CKC
CHECKED BY	CKC
APPROVED BY	JHM

SHEET TITLE

ACCESSIBILITY SITE PLAN - FOR REFERENCE ONLY

SHEET NUMBER

G-100

SHEET NO. OF

IDS GROUP - FILE LOCATION: C:\Users\chris.corbett\Documents\22X066.02_ARCH_R20_chris.corbettRXSMS.rvt 7/24/2023 9:27:18 AM

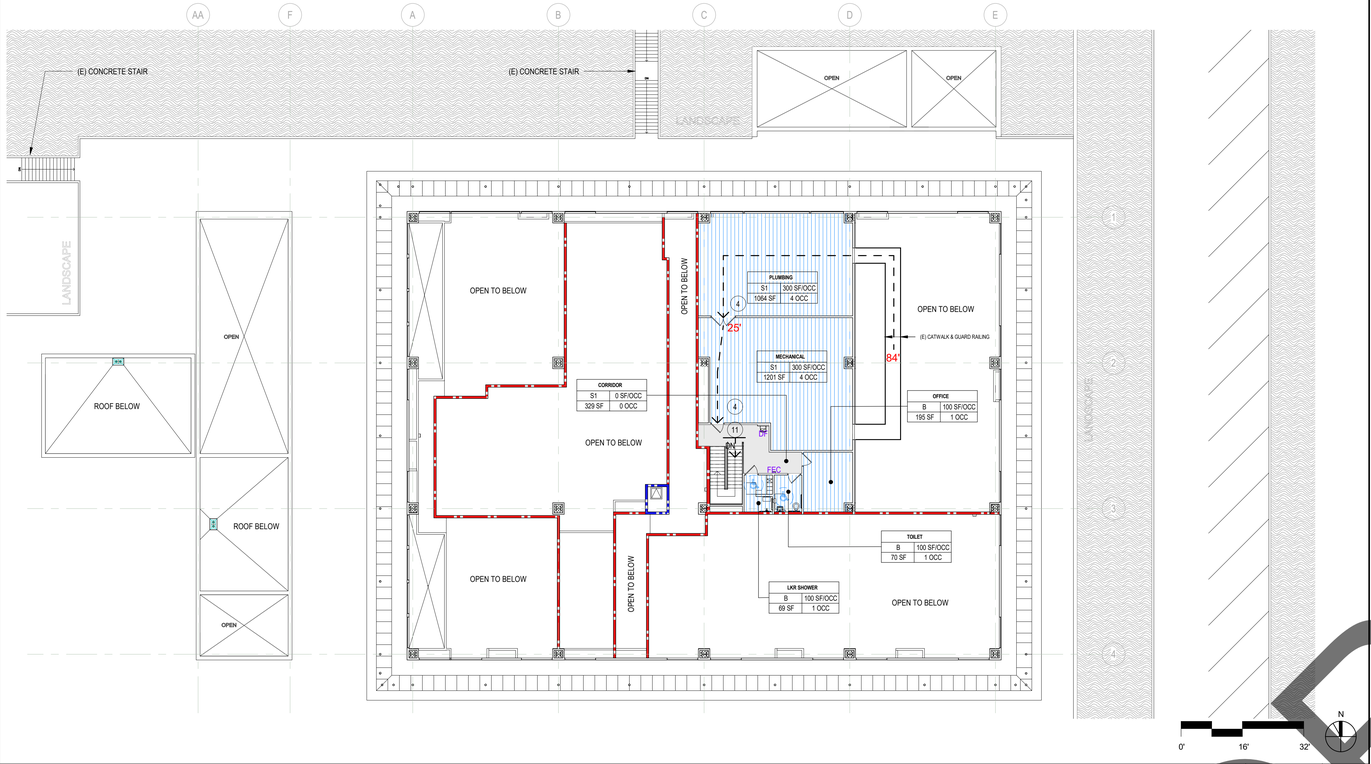

LEVEL 2 CODE PLAN | 1/16" = 1'-0" | 2

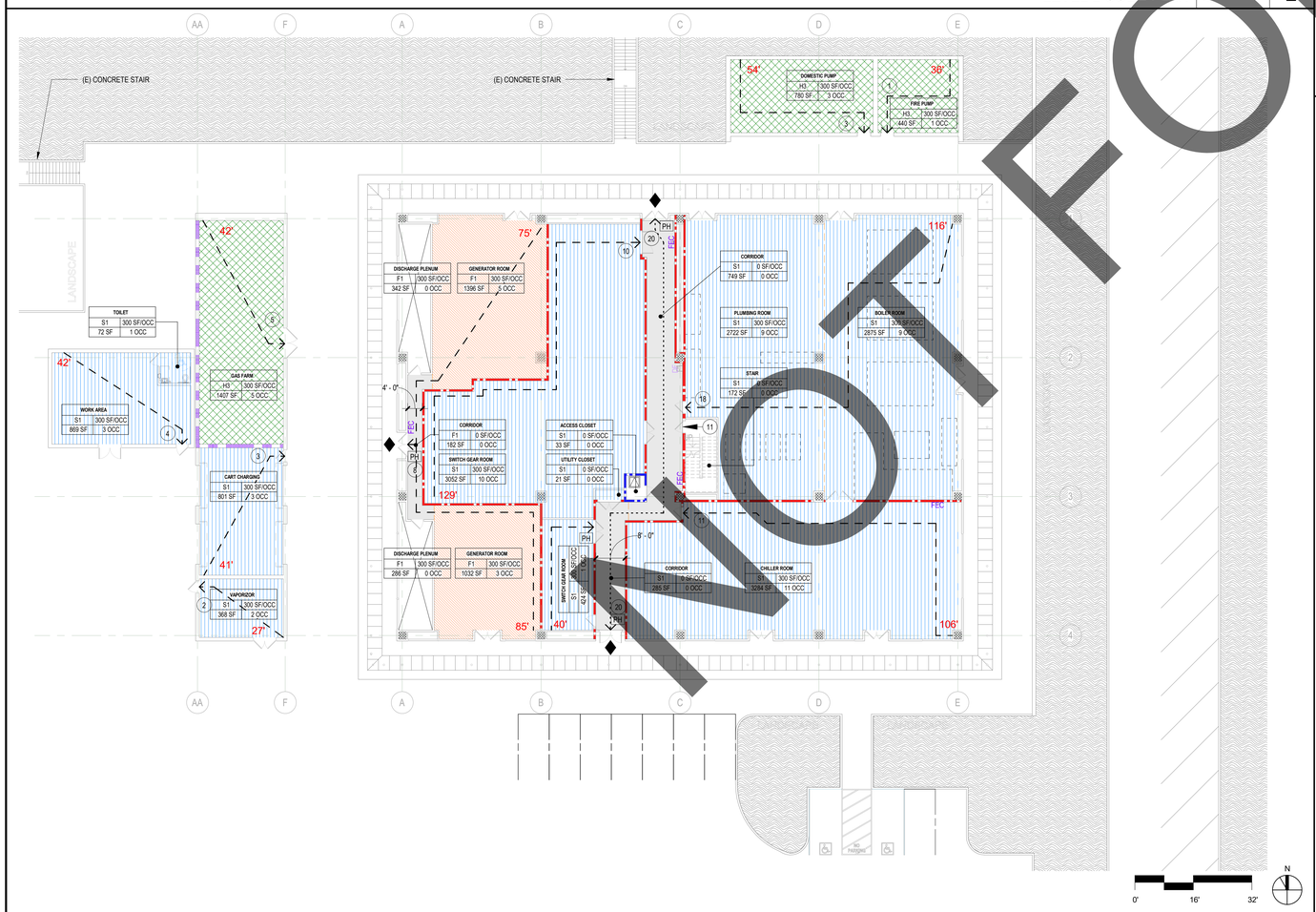

LEVEL 1 CODE PLAN | 1/16" = 1'-0" | 1

CODE ANALYSIS

PROJECT LOCATION:

400 N Pepper Ave, Colton, CA 92324

DESCRIPTION OF WORK:

REPLACEMENT OF EXISTING MECHANICAL EQUIPMENT AT THE BOILER ROOM INSIDE THE CENTRAL PLANT BUILDING. TEMPORARY REMOVAL AND RE-INSTALLATION OF EXISTING EXTERIOR LOUVER PANELS AS REQUIED. TEMPORARY CONSTRUCTION AND TEMPORARY EQUIPMENT CONNECTIONS TO PROVIDE FULLY OPERATIONAL AND UNINTERUPTED SERVICES TO HOSPITAL. SIESMIC BRACING AND ANCHORAGE OF ANY NEW MECHANICAL UTILITY CONNECTIONS. PATCH AND REPAIR OF ANY NEW MECHANICAL UTILITY PENETRATIONS.

OCCUPANCY AND USE

- CENTRAL PLANT BUILDING:
GROUP F-1, GROUP S-1, AND GROUP H-3 (OUTER BUILDINGS B & C)

OCCUPANCY SEPARATION PER CBC TABLE 508.4, 1-HR

EXIT ACCESS TRAVEL DISTANCE
- (OCCUPANCIES F-1, H-3, S-1) = NOT GREATER THAN 300'

CONSTRUCTION CLASSIFICATION:

- TYPE I A, NON-COMBUSTIBLE, FULLY SPRINKLERED, UNLIMITED ALLOWABLE AREA

SEISMIC ZONE:

- REFER TO STRUCTURAL DRAWINGS

CLASSIFICATION AND STATUS:
- BLD-00075, OSHPD 1 AND IN SERVICE, BUILT 2000 (UNDER 1989 CBC)
SPC 5, NPC 5.

NUMBER OF STORIES:

- CENTRAL PLANT BUILDING : 2 STORIES ABOVE GRADE

BUILDING HEIGHT:

- 52'-6" ABOVE GRADE

BUILDING AREA:

- GROSS HCAI BLD-00075 CENTRAL PLANT -Bldg 05:
18,135 SF (A- 1ST FLOOR)
+ 1,430 SF (B- 1ST FLOOR)
+ 2,925 SF (C- 1ST FLOOR)
+ 1,080 SF (D- 1ST FLOOR) = 23,570 SF

+ 3,220 SF (2ND FLOOR)
= 26,790 SF TOTAL SQUAREFOOTAGE)

FIRE-RESISTIVE RATING REQUIREMENTS FOR BUILDING ELEMENTS BASED ON CONSTRUCTION TYPE I-A, CBC TABLE 601.

BUILDING ELEMENT	REQUIRED SEPARATION IN HOURS
PRIMARY STRUCTURAL FRAME	3
BEARING WALLS	
EXTERIOR	2 - FIRE RETARDANT FRAMING REQUIRED
FOR WOOD PER CBC 602.3	
INTERIOR	0
NON-BEARING WALLS AND PARTITIONS	
EXTERIOR	SEE TABLE 705.5
INTERIOR	0
FLOOR CONSTRUCTION & SECONDARY MEMBERS	2
ROOF CONSTRUCTION & SECONDARY MEMBERS	1 1/2

ROOF CONSTRUCTION
: CLASS A CLASS C MINIMUM REQUIREMENT CBC TABLE 1505

EXISTING PLUMBING FIXTURES, OCCUPANT LOAD FACTOR PER TABLE CPC TABLE 4-1

OCCUPANCY	OCCUPANT LOAD FACTOR	FLOOR AREA
F-1	4000	3,211
S-1	4000	15,727
H-3	4000	2,627

GENERAL NOTES - CODE PLAN

1. ALL FIRE LIFE SAFETY FEATURES SHOWN ARE BASED ON RECORD DRAWINGS PROVIDED BY ARROWHEAD REGIONAL MEDICAL CENTER.

GRAPHIC LEGEND - CODE PLAN

SYMBOL	DESCRIPTION
	EXISTING PARTITION WALL
	NON RATED PARTITION WALL
	1 HOUR RATED FIRE BARRIER
	2 HOUR RATED FIRE-SMOKE BARRIER
	2 HOUR RATED FIRE-SMOKE BARRIER OCCUPANCY SEP
	4 HOUR RATED FIRE WALL
	CURTAINWALL / STOREFRONT/LOUVER PANEL
PH	PANIC HARDWARE
FEC	FIRE EXTINGUISHER CABINET
DF	DRINKING FOUNTAIN
	F1 OCCUPANCY
	H3 OCCUPANCY
	S1 OCCUPANCY
	CORRIDOR CIRCULATION
	COLUMNS OR STRUCTURE WITH SPAY ON FIRE PROTECTION
0	EGRESS TAG NUMBER OF OCCUPANTS EXITING IN DIRECTION OF TRAVEL
	EGRESS
90'-0"	TRAVEL DISTANCE TO EXIT ENCLOSURE OR EXIT FROM FURTHEST POINT IN BUILDING AWAY FROM EXIT
90'-0"	TRAVEL DISTANCE TO EXIT ACCESS DOORWAY FROM FURTHEST POINT IN ROOM AWAY FROM EXIT
	BUILDING EXIT/ ENTRANCE

ROOM OCCUPANCY TAG
ROOM NAME
OCCUPANT LOAD
ROOM OCCUPANCY
OCCUPANCY GROUP
ROOM AREA

KEYPLAN

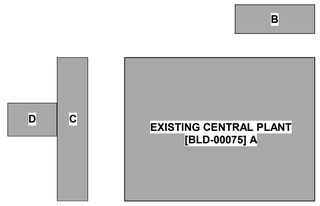

NOT FOR BID

APPROVAL

REVIEWED IN ACCORDANCE WITH THE REQUIREMENTS OF T24, CCR
APPROVED
Department of Health Care Access & Information
Office of Statewide Hospital Planning & Development
6/9/2023, 7:23:46 AM
S230562-36-00
Allen Cheng

FOR REFERENCE ONLY

CLIENT

SAN BERNARDINO COUNTY

SAN BERNANDINO COUNTY
PROJECT AND FACILITIES MANAGEMENT DEPARTMENT

385 NORTH ARROWHEAD AVENUE, 3RD FLOOR SAN BERNARDINO, CA 92415-0184

PROJECT NAME

ARMC DEAERATOR #1 REPLACEMENT

PROJECT NO.
WBSE # 10.10.0847
CIP # 20-011
HCAI # S230562-36-00

FACILITY NO.
17282

BUILDING NO.
BLD-00075 CENTRAL PLANT

400 N. PEPPER AVENUE
COLTON, CA 92324-1801

ENGINEER/ARCHITECT

IDS

IDS GROUP

1 PETERS CANYON ROAD, SUITE 130
IRVINE, CA. 92606
TEL: 949-387-8500, FAX: 949-387-0800

STAMP

LICENSED ARCHITECT
JOSEPH H MACDONALD
C-34131
JUNE 2023
GENERAL DATE
STATE OF CALIFORNIA

STAMP

REGISTERED PROFESSIONAL ENGINEER
DARREN B. SMITH
No. 30841
Exp. 12/31/24
MECHANICAL
STATE OF CALIFORNIA

ISSUE

REV.	DESCRIPTION	DATE
	HCAI SUBMITTAL	03/01/23
A	HCAI BC 1	06/13/23
B	HCAI BC 2	07/28/23

PROJECT IDENTIFICATION

THE ORIGINAL SIZE OF THIS SHEET IS 30" X 42"

THESE DRAWINGS AND SPECIFICATIONS ARE THE PROPERTY AND COPYRIGHT OF IDS GROUP AND SHALL NOT BE USED ON ANY OTHER PROJECT OR LOCATIONS EXCEPT AS DESCRIBED ON THE DRAWINGS, WITHOUT THE WRITTEN AGREEMENT WITH IDS GROUP.

IDS PROJECT NO.	22X66.02
DRAWN BY	CKC
CHECKED BY	CKC
APPROVED BY	JHM

SHEET TITLE

CODE COMPLIANCE PLAN - FOR REFERENCE ONLY

SHEET NUMBER

G-110

SHEET NO. OF

IDS GROUP - FILE LOCATION: C:\Users\chris.corbett\Documents\22X066.02_ARCH_R20_chris.corbettRX5MS.rvt
7/24/2023 9:27:22 AM

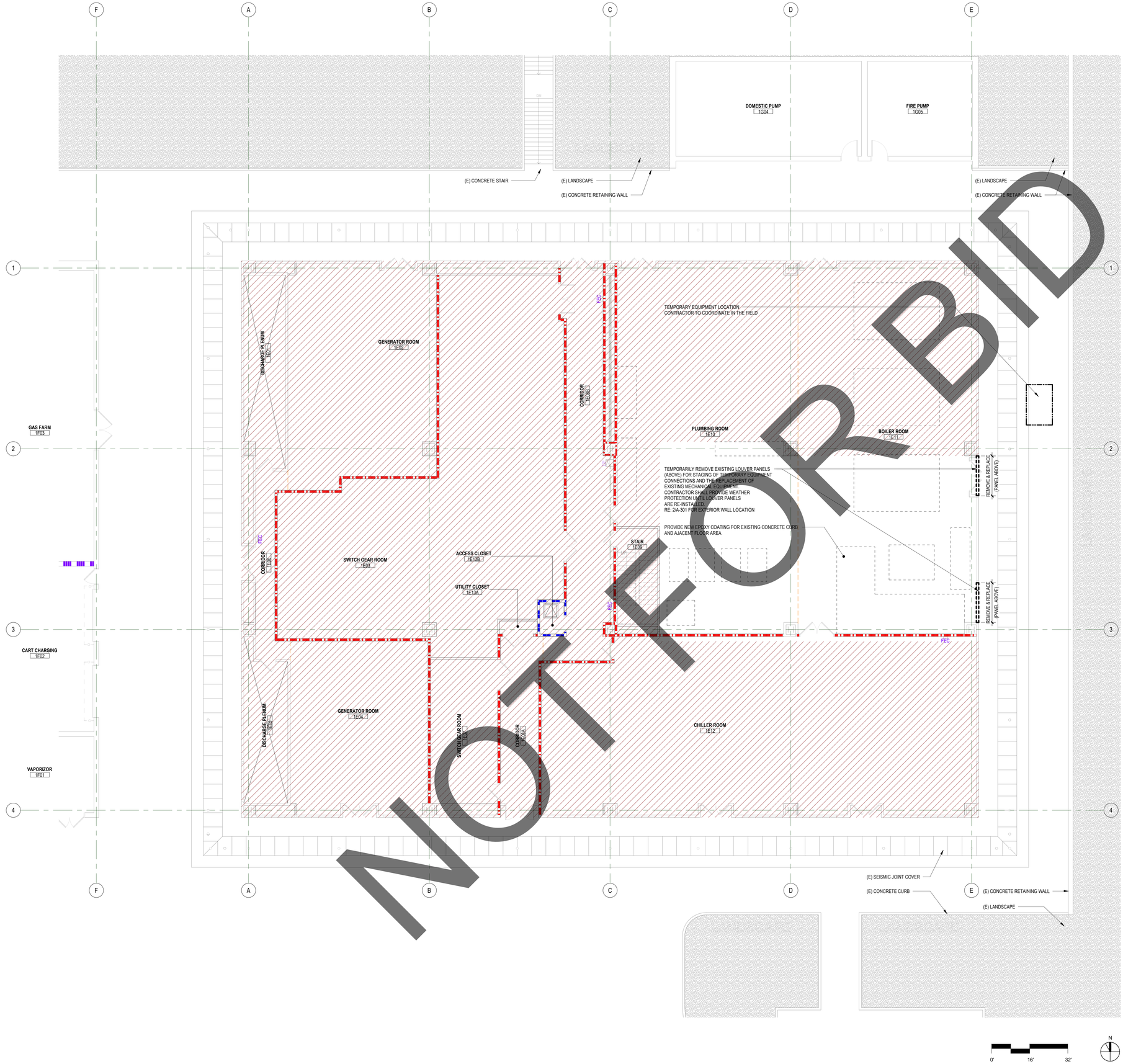

NOT FOR BID

01 FIRST FLOOR PLAN - OVERALL | 1/8" = 1'-0" | 1

GENERAL NOTES - FLOOR PLAN

1. ARCHITECTURAL SCOPE IS LIMITED TO THE TEMPORARY REMOVAL AND SUBSEQUENT REINSTALLATION OF EXISTING LOUVER PANELS AT THE FIRST FLOOR AS INDICATED.

GRAPHIC LEGEND - FLOOR PLAN

- NOT IN CONTRACT
- ACCESS PANEL / HATCH
- ACCESSIBLE SINK
- ACCESSIBLE TOILET
- FEC — FIRE EXTINGUISHER
- DF — DRINKING FOUNTAIN
- DOOR
- EXISTING PARTITION WALL
- NON RATED PARTITION WALL
- 1 HOUR RATED FIRE BARRIER
- 2 HOUR RATED FIRE-SMOKE BARRIER
- 2 HOUR RATED FIRE-SMOKE BARRIER OCCUPANCY SEP
- 4 HOUR RATED FIRE WALL
- CURTAINWALL / STOREFRONT/LOUVER PANEL

KEY PLAN

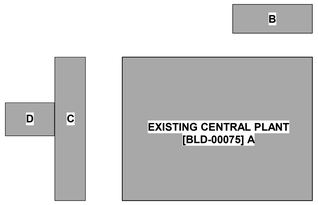

APPROVAL

REVIEWED IN ACCORDANCE WITH THE REQUIREMENTS OF T24, CCR
APPROVED
Department of Health Care Access & Information
Office of Statewide Hospital Planning & Development
6/9/2023, 7:23:46 AM
S230562-36-00
Allen Cheng

CLIENT

SAN BERNANDINO COUNTY
PROJECT AND FACILITIES MANAGEMENT DEPARTMENT

385 NORTH ARROWHEAD AVENUE, 3RD FLOOR SAN BERNARDINO, CA 92415-0184

PROJECT NAME

ARMC DEAERATOR #1 REPLACEMENT

PROJECT NO.
WBSE # 10.10.0847
CIP # 20-011
HCAI # S230562-36-00

FACILITY NO.
17282

BUILDING NO.
BLD-00075 CENTRAL PLANT

400 N. PEPPER AVENUE
COLTON, CA 92324-1801

ENGINEER/ARCHITECT

IDS GROUP

1 PETERS CANYON ROAD, SUITE 130
IRVINE, CA. 92606
TEL: 949-387-8500, FAX: 949-387-0800

STAMP

LICENSED ARCHITECT
JOSEPH H. MACDONALD
C-34131
JUNE 2023
GENERAL DATE
STATE OF CALIFORNIA

STAMP

REGISTERED PROFESSIONAL ENGINEER
DARREN B. SMITH
No. 30841
Exp. 12/31/24
MECHANICAL
STATE OF CALIFORNIA

ISSUE

REV.	DESCRIPTION	DATE
	HCAI SUBMITTAL	03/01/23
A	HCAI BC 1	06/13/23
B	HCAI BC 2	07/28/23

PROJECT IDENTIFICATION

THE ORIGINAL SIZE OF THIS SHEET IS 30" X 42"

THESE DRAWINGS AND SPECIFICATIONS ARE THE PROPERTY AND COPYRIGHT OF IDS GROUP AND SHALL NOT BE USED ON ANY OTHER PROJECT OR LOCATIONS EXCEPT AS DESCRIBED ON THE DRAWINGS, WITHOUT THE WRITTEN AGREEMENT WITH IDS GROUP.

IDS PROJECT NO.	22X66.02
DRAWN BY	CKC
CHECKED BY	CKC
APPROVED BY	JHM

SHEET TITLE

OVERALL FLOOR PLAN FIRST FLOOR

SHEET NUMBER

A-201

SHEET NO. OF

IDS GROUP - FILE LOCATION: C:\Users\chris.corbett\Documents\22X066.02_ARCH_R20_chris.corbett\RXSMS.rvt 7/24/2023 9:27:10 AM

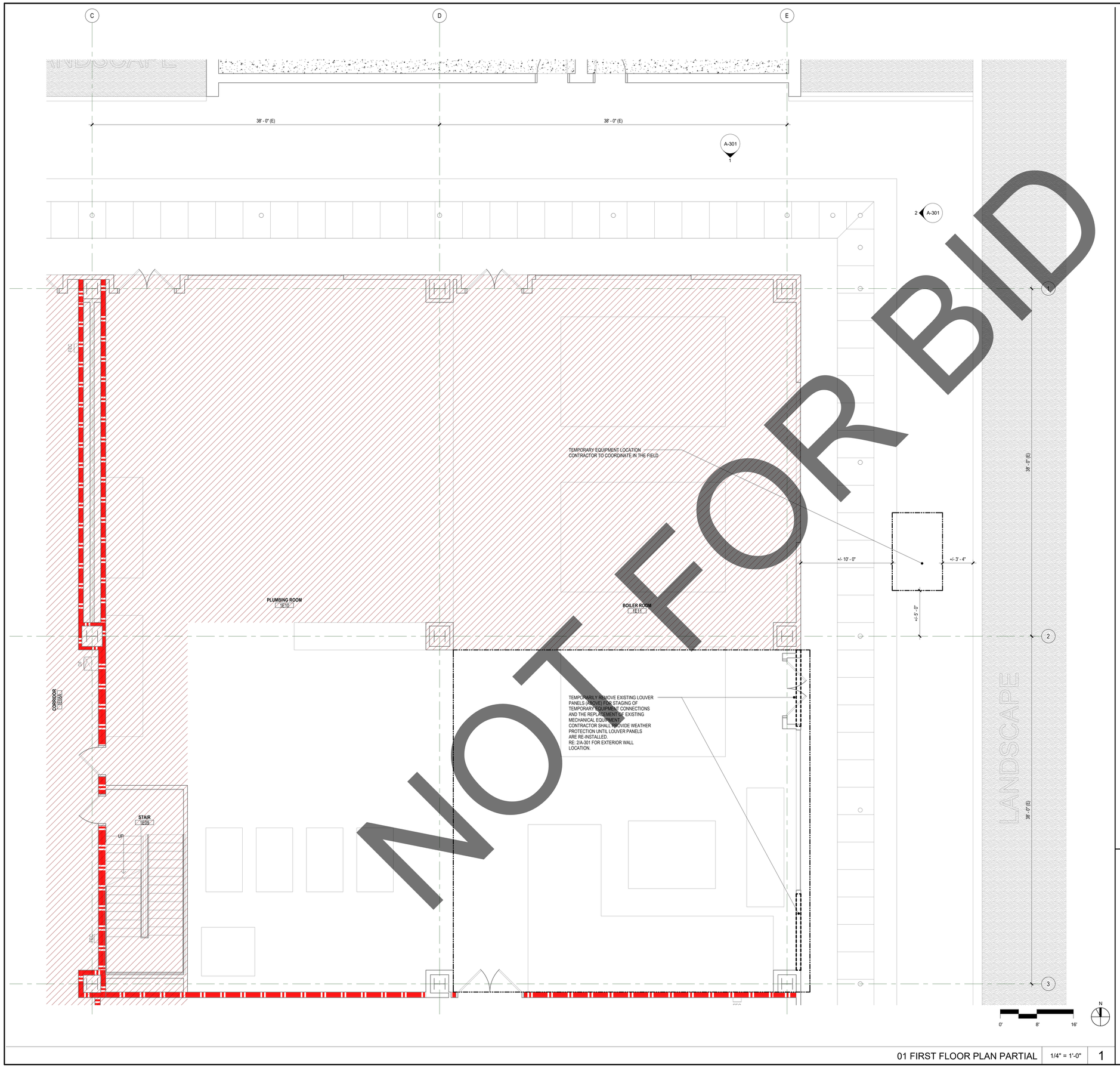

NOT FOR BID

01 FIRST FLOOR PLAN PARTIAL | 1/4" = 1'-0" | 1

GENERAL NOTES - FLOOR PLAN

1. ARCHITECTURAL SCOPE IS LIMITED TO THE TEMPORARY REMOVAL AND SUBSEQUENT REINSTALLATION OF EXISTING LOUVER PANELS AT THE FIRST FLOOR AS INDICATED.

GRAPHIC LEGEND - FLOOR PLAN

- NOT IN CONTRACT
- ACCESS PANEL / HATCH
- ACCESSIBLE SINK
- ACCESSIBLE TOILET
- FIRE EXTINGUISHER
- DRINKING FOUNTAIN
- DOOR
- EXISTING PARTITION WALL
- NON RATED PARTITION WALL
- 1 HOUR RATED FIRE BARRIER
- 2 HOUR RATED FIRE-SMOKE BARRIER
- 2 HOUR RATED FIRE-SMOKE BARRIER OCCUPANCY SEP
- 4 HOUR RATED FIRE WALL
- CURTAINWALL / STOREFRONT/LOUVER PANEL

KEY PLAN

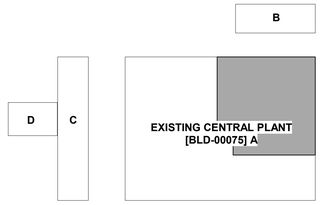

APPROVAL

REVIEWED IN ACCORDANCE WITH THE REQUIREMENTS OF T24, CCR
APPROVED
Department of Health Care Access & Information
Office of Statewide Hospital Planning & Development
6/9/2023, 7:23:46 AM
S230562-36-00
Allen Cheng

CLIENT

SAN BERNARDINO COUNTY

SAN BERNANDINO COUNTY
PROJECT AND FACILITIES MANAGEMENT DEPARTMENT

385 NORTH ARROWHEAD AVENUE, 3RD FLOOR SAN BERNARDINO, CA 92415-0184

PROJECT NAME

ARMC DEAERATOR #1 REPLACEMENT

PROJECT NO.
WBSE # 10.10.0847
CIP # 20-011
HCAI # S230562-36-00

FACILITY NO.
17282

BUILDING NO.
BLD-00075 CENTRAL PLANT

400 N. PEPPER AVENUE
COLTON, CA 92324-1801

ENGINEER/ARCHITECT

IDS

IDS GROUP

1 PETERS CANYON ROAD, SUITE 130
IRVINE, CA. 92606
TEL: 949-387-8500, FAX: 949-387-0800

STAMP

LICENSED ARCHITECT
JOSEPH H. MACDONALD
C-34131
JUNE 2023
EXPIRATION DATE
STATE OF CALIFORNIA

STAMP

REGISTERED PROFESSIONAL ENGINEER
DARREN B. SMITH
No. 30841
Exp. 12/31/24
MECHANICAL
STATE OF CALIFORNIA

ISSUE

REV.	DESCRIPTION	DATE
	HCAI SUBMITTAL	03/01/23
A	HCAI BC 1	06/13/23
B	HCAI BC 2	07/28/23

PROJECT IDENTIFICATION

THE ORIGINAL SIZE OF THIS SHEET IS 30" X 42"

THESE DRAWINGS AND SPECIFICATIONS ARE THE PROPERTY AND COPYRIGHT OF IDS GROUP AND SHALL NOT BE USED ON ANY OTHER PROJECT OR LOCATIONS EXCEPT AS DESCRIBED ON THE DRAWINGS, WITHOUT THE WRITTEN AGREEMENT WITH IDS GROUP.

IDS PROJECT NO.	22X66.02
DRAWN BY	CKC
CHECKED BY	CKC
APPROVED BY	JHM

SHEET TITLE

FLOOR PLAN FIRST FLOOR - PARTIAL

SHEET NUMBER

A-201A

SHEET NO. OF

IDS GROUP - FILE LOCATION: C:\Users\chris.corbett\Documents\22X066.02_ARCH_R20_chris.corbettRXSMS.rvt 7/24/2023 9:27:11 AM

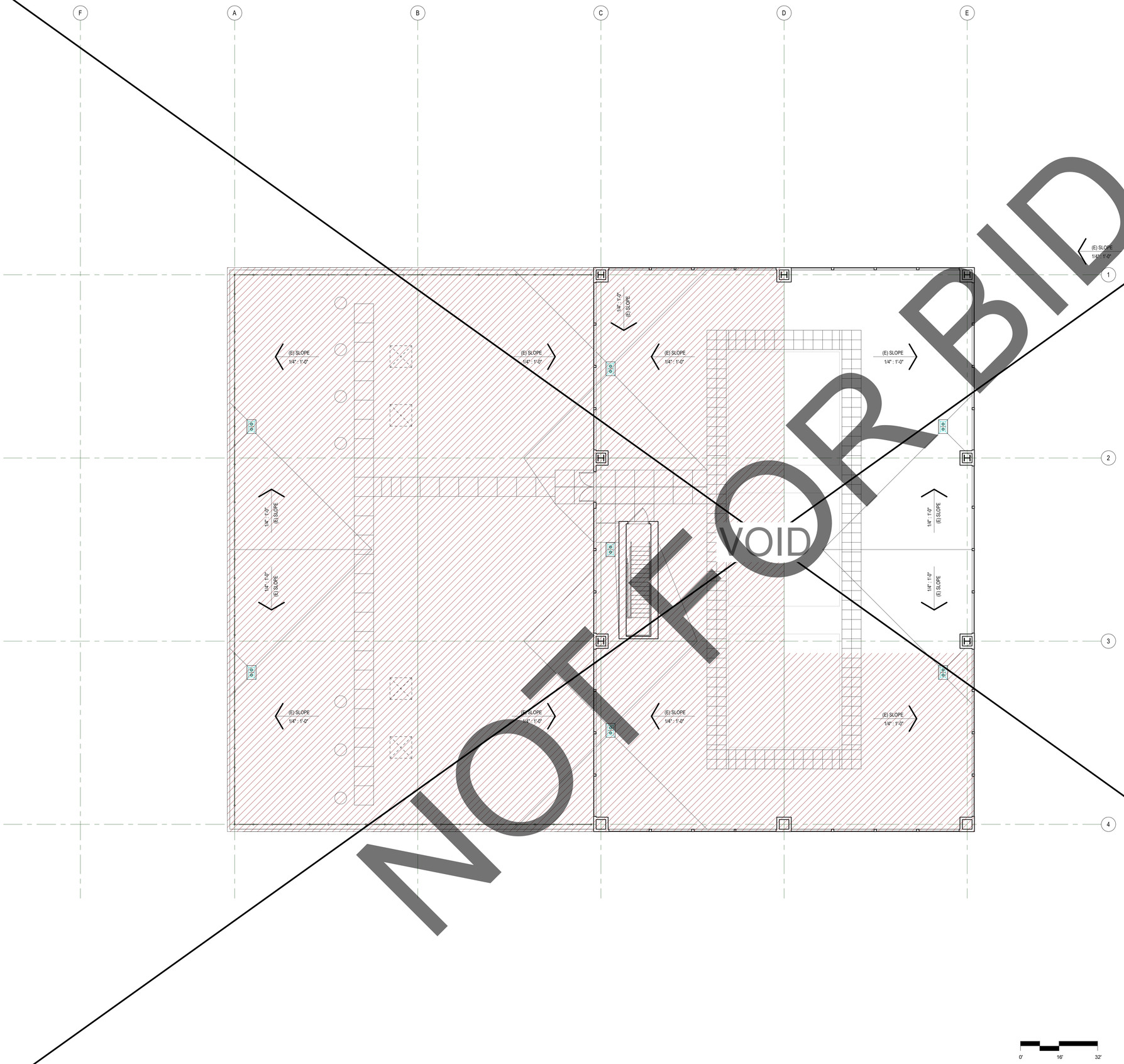

ROOF PLAN - OVERALL | 1/8" = 1'-0" | 1

GENERAL NOTES - ROOF PLAN

1. ROOF PLAN IS SHOWN **FOR REFERENCE ONLY**, NO ARCHITECTURAL SCOPE OF WORK.
2. FOR ANY NEW MECHANICAL/PLUMBING PENETRATIONS, THE CONTRACTOR SHALL PROVIDE PATCH & REPAIR AS REQUIRED.

GRAPHIC LEGEND - ROOF PLAN

- SLOPE 1/4" : 1'-0" — SLOPE OF STRUCTURE (AS INDICATED)
- SLOPE OF CRICKET (1/4" PER FOOT MIN.)
- RD — ROOF DRAIN
- ROOF DRAIN & OVERFLOW DRAIN
- TAPERED INSULATION
- MEMBRANE ROOFING
- NOT IN CONTRACT

KEY PLAN

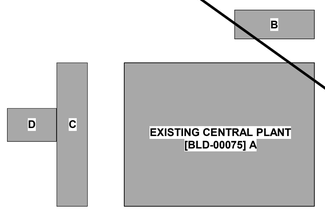

APPROVAL

CLIENT

SAN BERNARDINO COUNTY

SAN BERNANDINO COUNTY
PROJECT AND FACILITIES
MANAGEMENT DEPARTMENT

385 NORTH ARROWHEAD AVENUE, 3RD FLOOR SAN BERNARDINO, CA 92415-0184

PROJECT NAME

REPLACEMENT DEAERATOR

PROJECT ADDRESS

400 N PEPPER AVE, COLTON, CA 92324

PROJECT NO.
WBSE # 10.10.0847
CIP # 20-211
HCAI # S230562-36-00

FACILITY NO.
17282

BUILDING NO.
BLD-00075 CENTRAL PLANT

ENGINEER/ARCHITECT

IDS

IDS GROUP

1 PETERS CANYON ROAD, SUITE 130
IRVINE, CA. 92606
TEL: 949-387-8500, FAX: 949-387-0800

STAMP

LICENSED ARCHITECT
JOSEPH H. MACDONALD
C-34131
JUNE 2023
EXPIRATION DATE
STATE OF CALIFORNIA

STAMP

REGISTERED PROFESSIONAL ENGINEER
DAREN B. SMITH
No. 30841
Exp. 12/31/24
MECHANICAL
STATE OF CALIFORNIA

ISSUE

REV.	DESCRIPTION	DATE
	HCAI SUBMITTAL	04/28/23

PROJECT IDENTIFICATION

THE ORIGINAL SIZE OF THIS SHEET IS 30" X 42"

THESE DRAWINGS AND SPECIFICATIONS ARE THE PROPERTY AND COPYRIGHT OF IDS GROUP AND SHALL NOT BE USED ON ANY OTHER PROJECT OR LOCATIONS EXCEPT AS DESCRIBED ON THE DRAWINGS, WITHOUT THE WRITTEN AGREEMENT WITH IDS GROUP.

IDS PROJECT NO.	22X66.02
DRAWN BY	CKC
CHECKED BY	CKC
APPROVED BY	JHM

SHEET TITLE

OVERALL ROOF PLAN

SHEET NUMBER

A-203

SHEET NO. XXX OF XXX

IDS GROUP - FILE LOCATION: \\IDS-FS1\Shared\PROJECTS\2022\Shared\22X066.02 ARMC - Replacement Deaerator 1104 BIM\01 Arch\22X066.02_ARCH_R20.rvt 2/24/2023 11:04:41 AM

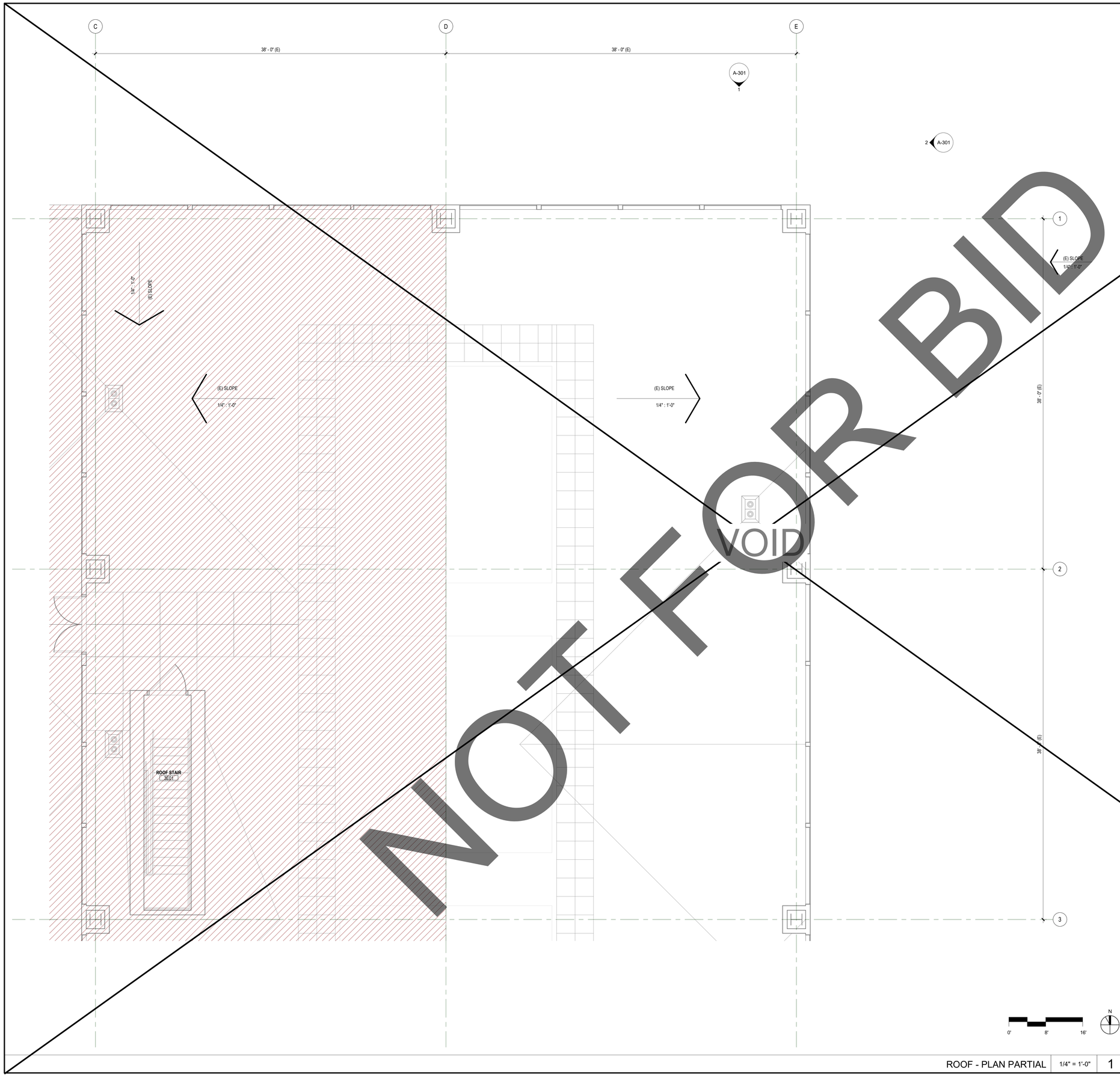

NOT FOR BID

ROOF - PLAN PARTIAL | 1/4" = 1'-0" | 1

GENERAL NOTES - ROOF PLAN

1. ROOF PLAN IS SHOWN **FOR REFERENCE ONLY**, NO ARCHITECTURAL SCOPE OF WORK.
2. FOR ANY NEW MECHANICAL/PLUMBING PENETRATIONS, THE CONTRACTOR SHALL PROVIDE PATCH & REPAIR AS REQUIRED.

GRAPHIC LEGEND - ROOF PLAN

SLOPE 1/4" : 1'-0"	SLOPE OF STRUCTURE (AS INDICATED)
	SLOPE OF CRICKET (1/4" PER FOOT MIN.)
RD	ROOF DRAIN
	ROOF DRAIN & OVERFLOW DRAIN
	TAPERED INSULATION
	MEMBRANE ROOFING
	NOT IN CONTRACT

KEY PLAN

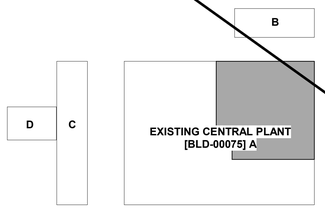

APPROVAL

CLIENT

SAN BERNARDINO COUNTY

SAN BERNANDINO COUNTY
PROJECT AND FACILITIES
MANAGEMENT DEPARTMENT

385 NORTH ARROWHEAD AVENUE, 3RD FLOOR SAN BERNARDINO, CA 92415-0184

PROJECT NAME

REPLACEMENT DEAERATOR

PROJECT ADDRESS

400 N PEPPER AVE, COLTON, CA 92324

PROJECT NO.

WBSE # 10.10.0847
CIP # 20-211
HCAI # S230562-36-00

FACILITY NO.

17282

BUILDING NO.

BLD-00075 CENTRAL PLANT

ENGINEER/ARCHITECT

IDS

IDS GROUP

1 PETERS CANYON ROAD, SUITE 130
IRVINE, CA. 92606
TEL: 949-387-8500, FAX: 949-387-0800

STAMP

LICENSED ARCHITECT
JOSEPH H. MACDONALD
C-34131
JUNE 2023
GENERAL DATE
STATE OF CALIFORNIA

STAMP

REGISTERED PROFESSIONAL ENGINEER
DARREN B. SMITH
No. 30841
Exp. 12/31/24
MECHANICAL
STATE OF CALIFORNIA

ISSUE

REV.	DESCRIPTION	DATE
	HCAI SUBMITTAL	04/28/23

PROJECT IDENTIFICATION

THE ORIGINAL SIZE OF THIS SHEET IS 30" X 42"

THESE DRAWINGS AND SPECIFICATIONS ARE THE PROPERTY AND COPYRIGHT OF IDS GROUP AND SHALL NOT BE USED ON ANY OTHER PROJECT OR LOCATIONS EXCEPT AS DESCRIBED ON THE DRAWINGS, WITHOUT THE WRITTEN AGREEMENT WITH IDS GROUP.

IDS PROJECT NO.	22X66.02
DRAWN BY	CKC
CHECKED BY	CKC
APPROVED BY	JHM

SHEET TITLE

ROOF PLAN - PARTIAL

SHEET NUMBER

A-203A

SHEET NO. XXX OF XXX

IDS GROUP - FILE LOCATION: \\IDS-FS1\Shared\PROJECTS\2022\Shared\22X066.02 ARMC - Replacement Deaerator 10A BIM\01 Arch\22X066.02_ARCH_R20.rvt 2/24/2023 11:04:42 AM

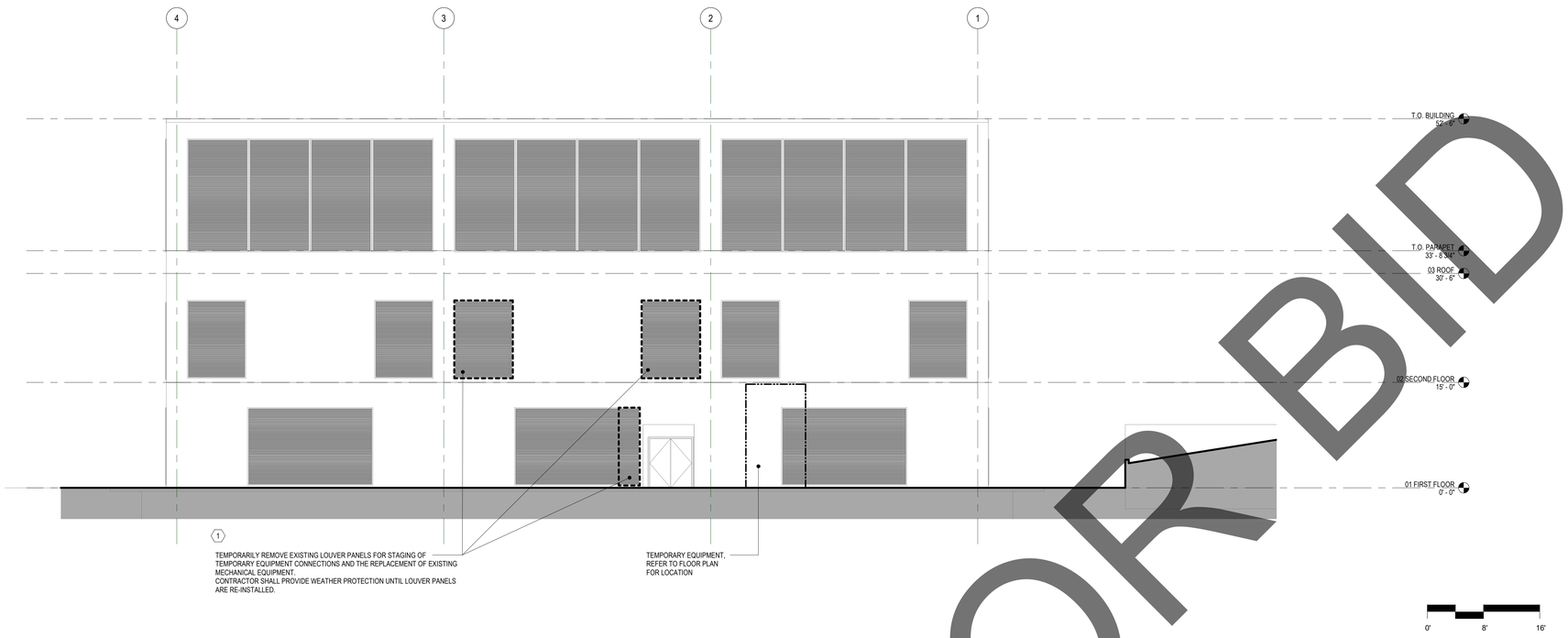

DEMOLITION EAST ELEVATION - OVERALL | 1/8" = 1'-0" | 2

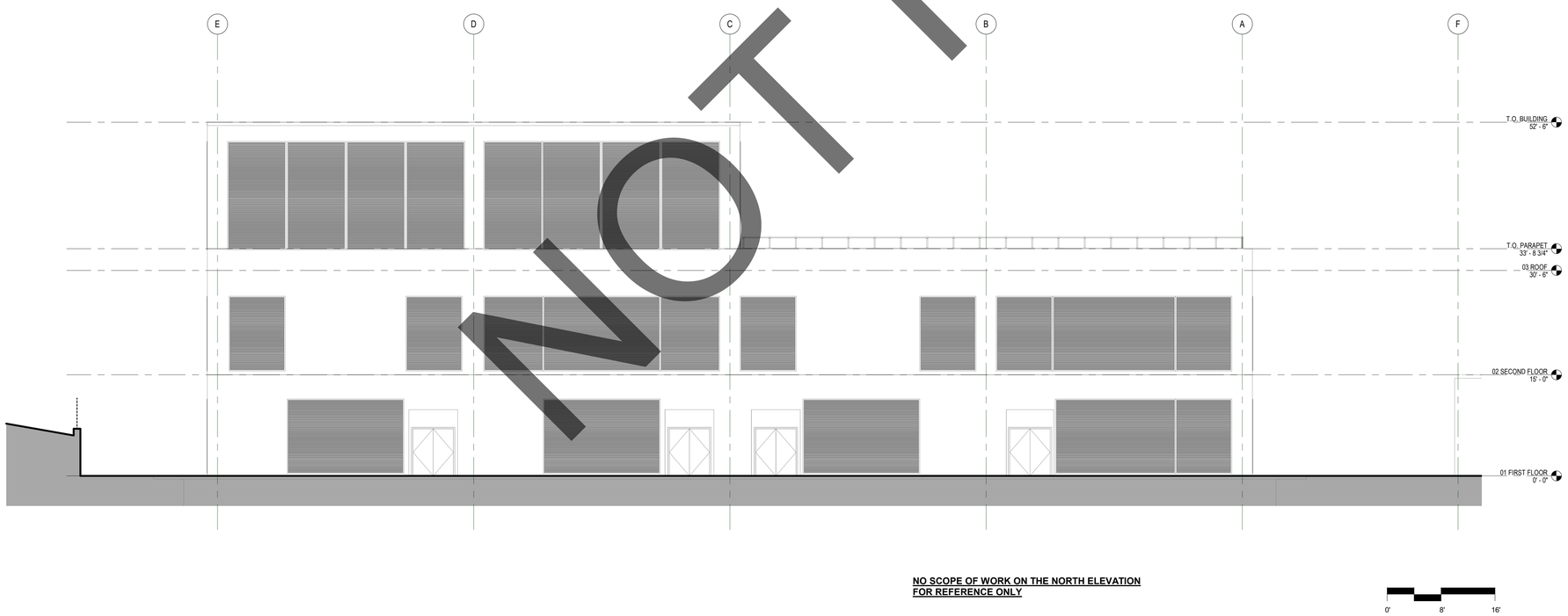

NO SCOPE OF WORK ON THE NORTH ELEVATION FOR REFERENCE ONLY

NORTH ELEVATION - OVERALL | 1/8" = 1'-0" | 1

NOT FOR BID

GENERAL NOTES - EXT. ELEVATIONS

1. ARCHITECTURAL SCOPE IS LIMITED TO THE TEMPORARY REMOVAL AND SUBSEQUENT REINSTALLATION OF EXISTING LOUVER PANELS AT THE FIRST FLOOR EAST ELEVATION, AS INDICATED.
2. ALL OTHER BUILDING ELEVATIONS ARE SHOWN **FOR REFERENCE ONLY.**

APPROVAL

REVIEWED IN ACCORDANCE WITH THE REQUIREMENTS OF T24, CCR
APPROVED
Department of Health Care Access & Information
Office of Statewide Hospital Planning & Development
6/9/2023, 7:23:46 AM
S230562-36-00
Allen Cheng

CLIENT

SAN BERNARDINO COUNTY

SAN BERNANDINO COUNTY
PROJECT AND FACILITIES
MANAGEMENT DEPARTMENT

385 NORTH ARROWHEAD AVENUE, 3RD FLOOR SAN BERNARDINO, CA 92415-0184

PROJECT NAME

ARMC DEAERATOR #1 REPLACEMENT

PROJECT NO.
WBSE # 10.10.0847
CIP # 20-011
HCAI # S230562-36-00

FACILITY NO.
17282

BUILDING NO.
BLD-00075 CENTRAL PLANT

400 N. PEPPER AVENUE
COLTON, CA 92324-1801

ENGINEER/ARCHITECT

IDS

IDS GROUP

1 PETERS CANYON ROAD, SUITE 130
IRVINE, CA. 92606
TEL: 949-387-8500, FAX: 949-387-0800

STAMP

LICENSED ARCHITECT
JOSEPH H. MACDONALD
C-34131
JUNE 2023
GENERAL DATE
STATE OF CALIFORNIA

STAMP

REGISTERED PROFESSIONAL ENGINEER
DARREN B. SMITH
No. 30841
Exp. 12/31/24
MECHANICAL
STATE OF CALIFORNIA

ISSUE

REV.	DESCRIPTION	DATE
	HCAI SUBMITTAL	03/01/23
A	HCAI BC 1	06/13/23
B	HCAI BC 2	07/28/23

PROJECT IDENTIFICATION

THE ORIGINAL SIZE OF THIS SHEET IS 30" X 42"

THESE DRAWINGS AND SPECIFICATIONS ARE THE PROPERTY AND COPYRIGHT OF IDS GROUP AND SHALL NOT BE USED ON ANY OTHER PROJECT OR LOCATIONS EXCEPT AS DESCRIBED ON THE DRAWINGS, WITHOUT THE WRITTEN AGREEMENT WITH IDS GROUP.

IDS PROJECT NO.	22X66.02
DRAWN BY	CKC
CHECKED BY	CKC
APPROVED BY	JHM

SHEET TITLE

EXTERIOR ELEVATIONS

SHEET NUMBER

A-301

SHEET NO. OF

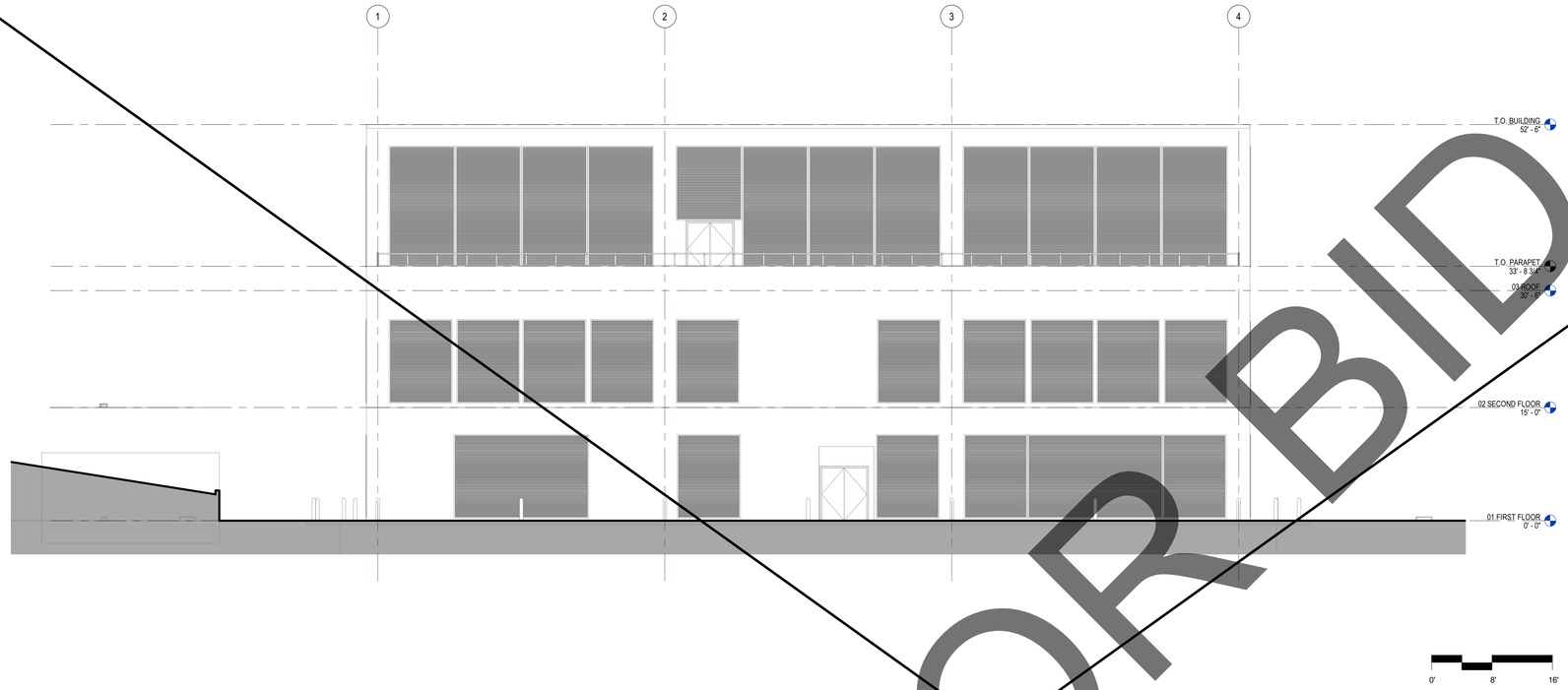

WEST ELEVATION - OVERALL | 1/8" = 1'-0" | 2

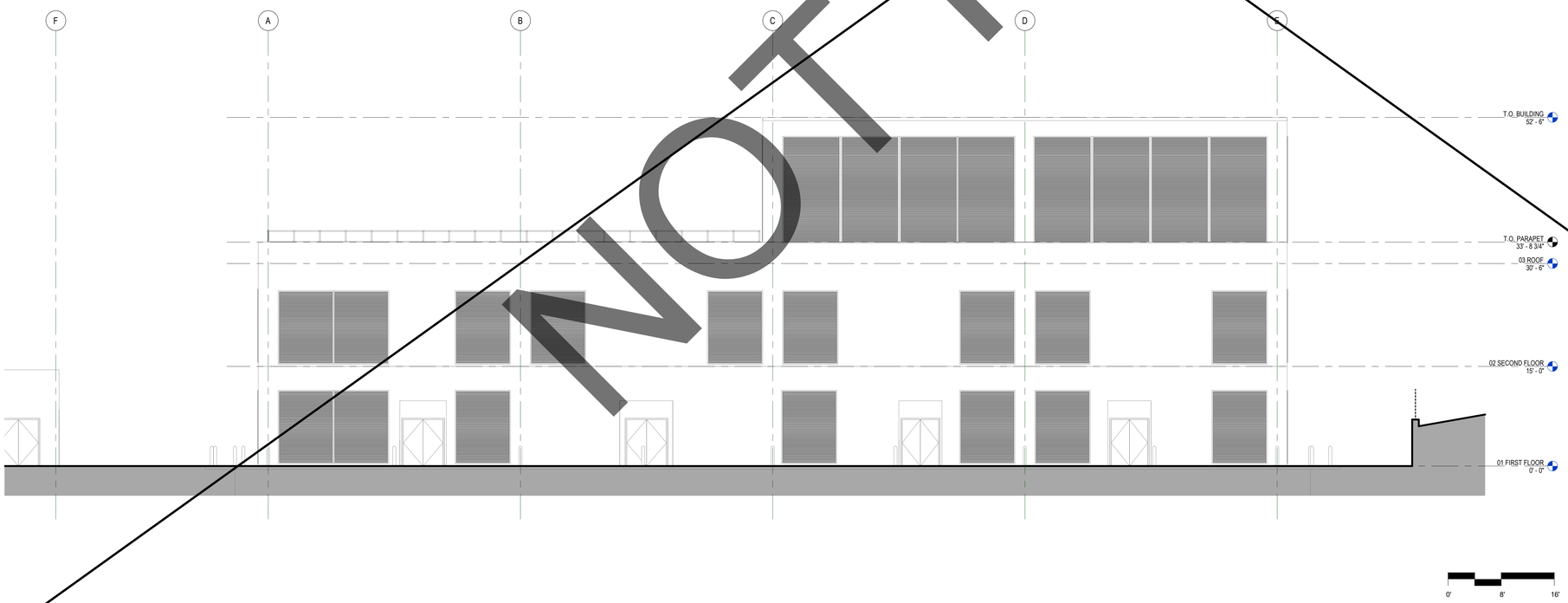

SOUTH ELEVATION - OVERALL | 1/8" = 1'-0" | 1

NOT FOR BID
VOID

GENERAL NOTES - EXT. ELEVATIONS

1. ARCHITECTURAL SCOPE IS LIMITED TO THE TEMPORARY REMOVAL AND SUBSEQUENT REINSTALLATION OF EXISTING LOUVER PANELS AT THE FIRST FLOOR EAST ELEVATION, AS INDICATED.

APPROVAL

CLIENT

SAN BERNARDINO COUNTY
PROJECT AND FACILITIES MANAGEMENT DEPARTMENT

385 NORTH ARROWHEAD AVENUE, 3RD FLOOR SAN BERNARDINO, CA 92415-0184

PROJECT NAME

REPLACEMENT DEAERATOR

PROJECT ADDRESS
400 N PEPPER AVE, COLTON, CA 92324

PROJECT NO.
WBSE # 10.10.0847
CIP # 20-211
HCAI # S230562-36-00

FACILITY NO.
17282

BUILDING NO.
BLD-00075 CENTRAL PLANT

ENGINEER/ARCHITECT

IDS GROUP

1 PETERS CANYON ROAD, SUITE 130
IRVINE, CA 92606
TEL: 949-387-8500, FAX: 949-387-0800

STAMP

LICENSED ARCHITECT
JOSEPH H. MACDONALD
C-34131
JUNE 2023
GENERAL DATE
STATE OF CALIFORNIA

STAMP

REGISTERED PROFESSIONAL ENGINEER
CARMEN B. SMITH
No. 30841
Exp. 12/31/24
MECHANICAL
STATE OF CALIFORNIA

ISSUE

REV.	DESCRIPTION	DATE
	HCAI SUBMITTAL	04/28/23

PROJECT IDENTIFICATION

THE ORIGINAL SIZE OF THIS SHEET IS 30" X 42"

THESE DRAWINGS AND SPECIFICATIONS ARE THE PROPERTY AND COPYRIGHT OF IDS GROUP AND SHALL NOT BE USED ON ANY OTHER PROJECT OR LOCATIONS EXCEPT AS DESCRIBED ON THE DRAWINGS, WITHOUT THE WRITTEN AGREEMENT WITH IDS GROUP.

IDS PROJECT NO.	22X66.02
DRAWN BY	CKC
CHECKED BY	CKC
APPROVED BY	JHM

SHEET TITLE

EXTERIOR ELEVATIONS

SHEET NUMBER

A-302

SHEET NO. XXX OF XXX

IDS GROUP - FILE LOCATION: \\IDS-FS1\Shared\PROJECTS\2022\Shared\22X066.02 ARMC - Replacement Deaerator 1\04 BIM\01 Arch\22X066.02_ARCH_R20.rvt
2/24/2023 11:04:53 AM

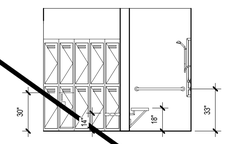

INTERIOR ELEVATION 1E02 - LOCKER SHOWER - EAST | 1/4" = 1'-0" | 12

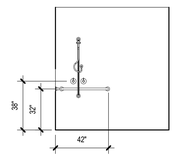

INTERIOR ELEVATION 1E02 - LOCKER SHOWER - SOUTH | 1/4" = 1'-0" | 11

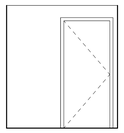

INTERIOR ELEVATION 2E03 - TOILET - NORTH | 1/4" = 1'-0" | 10

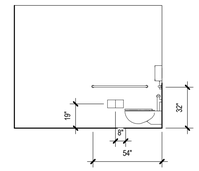

INTERIOR ELEVATION 2E03 - TOILET - EAST | 1/4" = 1'-0" | 9

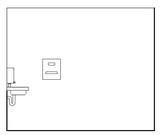

INTERIOR ELEVATION 2E03 - TOILET - WEST | 1/4" = 1'-0" | 8

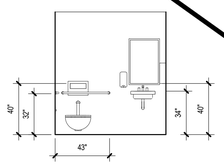

INTERIOR ELEVATION 2E03 - TOILET - SOUTH | 1/4" = 1'-0" | 7

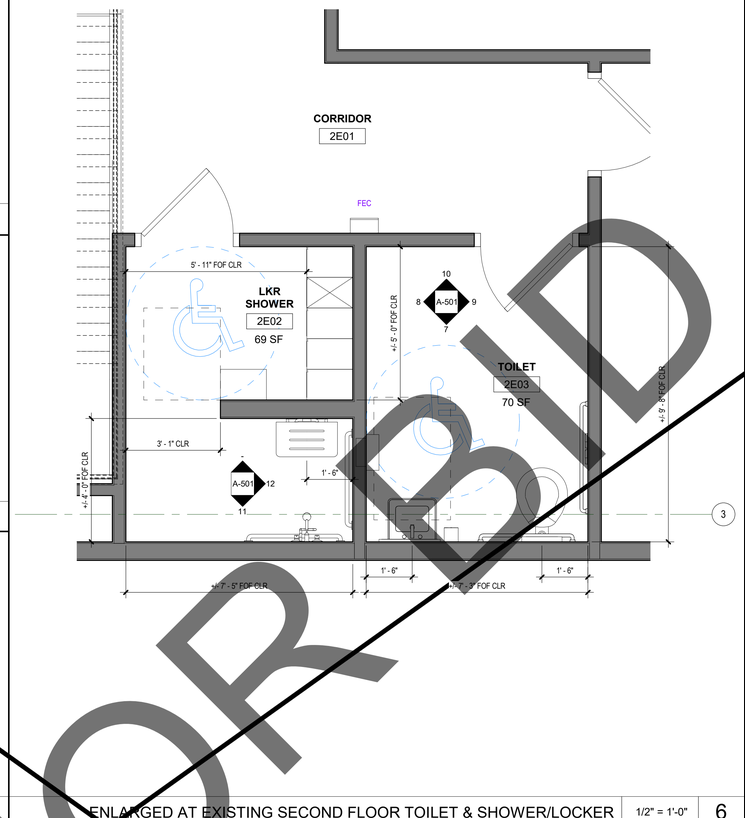

ENLARGED AT EXISTING SECOND FLOOR TOILET & SHOWER/LOCKER | 1/2" = 1'-0" | 6

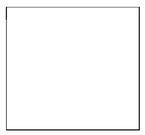

INTERIOR ELEVATION 1H02A - NORTH | 1/4" = 1'-0" | 5

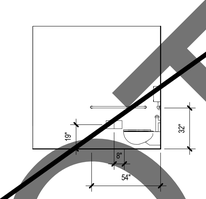

INTERIOR ELEVATION 1H02A - EAST | 1/4" = 1'-0" | 4

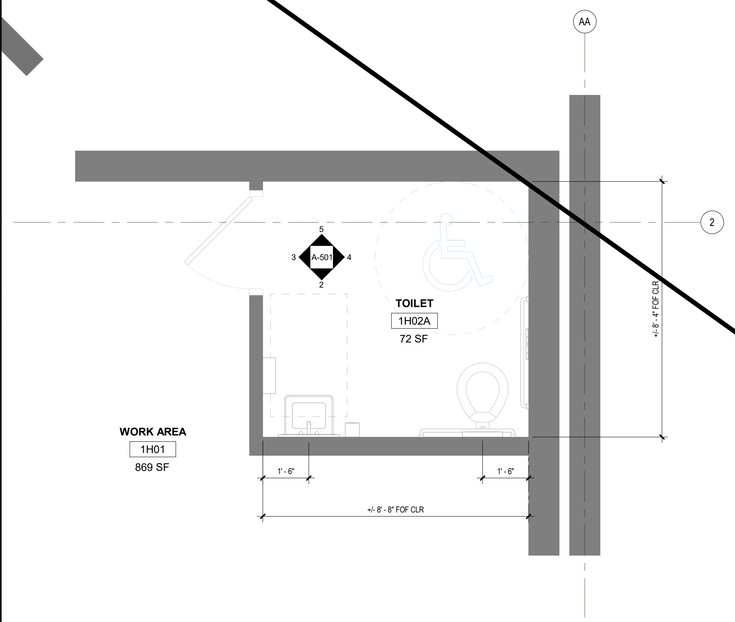

ENLARGED AT EXISTING FIRST FLOOR TOILET | 1/2" = 1'-0" | 1

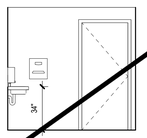

INTERIOR ELEVATION 1H02A - WEST | 1/4" = 1'-0" | 3

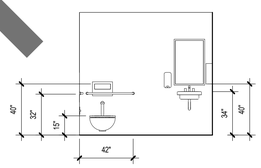

INTERIOR ELEVATION 1H02A - SOUTH | 1/4" = 1'-0" | 2

GENERAL NOTES

1. FOR REFERENCE ONLY. THE PURPOSE OF THIS DRAWING IS TO ILLUSTRATE THE EXISTING ACCESSIBLE TOILET FACILITIES AS SHOWN IN THE CENTRAL PLANT BUILDING. THESE AREAS ARE NOT IN CONTRACT AS PART OF THE MECHANICAL EQUIPMENT REPLACEMENT.
2. REFER TO G-011 FOR ACCESSIBLE FIXTURES AND SIGNAGE.

KEY PLAN

NOT FOR BID
VOID/NOT USED

APPROVAL

CLIENT

SAN BERNANDINO COUNTY
PROJECT AND FACILITIES MANAGEMENT DEPARTMENT

385 NORTH ARROWHEAD AVENUE, 3RD FLOOR SAN BERNARDINO, CA 92415-0184

PROJECT NAME

REPLACEMENT DEAERATOR

PROJECT ADDRESS
400 N PEPPER AVE, COLTON, CA 92324

OSHPD/HCAI PROJECT NO.
S230562-36-00

FACILITY NO.
17282

BUILDING NO.
BLD-00075 CENTRAL PLANT

ENGINEER/ARCHITECT

IDS GROUP

1 PETERS CANYON ROAD, SUITE 130
IRVINE, CA. 92606
TEL: 949-387-8500, FAX: 949-387-0800

STAMP

LICENSED ARCHITECT
JOSEPH H. MACDONALD
C-34131
Exp. 12/31/24
JUNE 20, 2023
STATE OF CALIFORNIA
NOT USED

STAMP

REGISTERED PROFESSIONAL ENGINEER
DARREN B. SMITH
No. 30841
Exp. 12/31/24
MECHANICAL
STATE OF CALIFORNIA
NOT USED

ISSUE

REV.	DESCRIPTION	DATE
	HCAI SUBMITTAL	03/01/23
	HCAI BC 1	06/13/23
	HCAI BC 2	07/28/23

PROJECT IDENTIFICATION

THE ORIGINAL SIZE OF THIS SHEET IS 30" X 42"

THESE DRAWINGS AND SPECIFICATIONS ARE THE PROPERTY AND COPYRIGHT OF IDS GROUP AND SHALL NOT BE USED ON ANY OTHER PROJECT OR LOCATIONS EXCEPT AS DESCRIBED ON THE DRAWINGS, WITHOUT THE WRITTEN AGREEMENT WITH IDS GROUP.

IDS PROJECT NO.	22X66.02
DRAWN BY	CKC
CHECKED BY	CKC
APPROVED BY	JHM

SHEET TITLE

ENLARGED PLANS AT EXISTING TOILETS_NOT USED

SHEET NUMBER

A-501

SHEET NO. OF

IDS GROUP - FILE LOCATION: C:\Users\chris.corbett\Documents\22X066.02_ARCH_R20_chris.corbettRXSMS.rvt
8/4/2023 2:33:57 PM

STRUCTURAL OBSERVATIONS

1. THE OWNER SHALL EMPLOY THE ENGINEER OF RECORD REGISTERED/LICENSED IN THE STATE OF CALIFORNIA WHO IS RESPONSIBLE FOR THE STRUCTURAL DESIGN, TO DO STRUCTURAL OBSERVATION.

2. THE STRUCTURAL OBSERVATION IS REQUIRED FOR THE STRUCTURAL SYSTEM IN ACCORDANCE WITH CBC 2022, SECTION 1704A. STRUCTURAL OBSERVATION IS THE VISUAL OBSERVATION OF THE ELEMENTS AND CONNECTIONS OF THE STRUCTURAL SYSTEM AT SIGNIFICANT CONSTRUCTION STAGES AND THE COMPLETE STRUCTURE FOR GENERAL CONFORMANCE TO THE APPROVED PLANS AND SPECIFICATIONS. STRUCTURAL OBSERVATION DOES NOT WAIVE THE RESPONSIBILITY FOR THE INSPECTIONS REQUIRED OF THE PROJECT INSPECTOR, DEPUTY INSPECTOR, SPECIAL INSPECTOR OR CITY INSPECTOR.

3. STRUCTURAL OBSERVER OF RECORD: RAMI ELHASSAN, S3930

4. THE STRUCTURAL OBSERVER SHALL PERFORM SITE VISITS AT THOSE STEPS IN THE PROGRESS OF THE CONSTRUCTION THAT ALLOW FOR CORRECTION OF DEFICIENCIES WITHOUT SUBSTANTIAL EFFORT OR UNCOVERING OF THE WORK INVOLVED. AT A MINIMUM, THE FOLLOWING SIGNIFICANT CONSTRUCTION STAGES REQUIRE A SITE VISIT AND AN OBSERVATION REPORT FROM THE STRUCTURAL OBSERVER.

   CONSTRUCTION STAGE ELEMENTS / CONNECTIONS TO BE OBSERVED;
   A. AFTER INSTALLING ANCHORS FOR THE TEMPORARY DEAERATOR.
   B. AFTER INSTALLING ANCHORS FOR THE PERMANENT DEAERATOR.

5. STRUCTURAL OBSERVATION: ALL STRUCTURAL OBSERVATIONS SHALL BE DOCUMENTED USING THE COUNTY OF SAN DERNARDINO STRUCTURAL OBSERVATION REPORT FORM, AND SHALL BE STAMPED AND SIGNED BY THE STRUCTURAL OBSERVER OF RECORD.

6. OBSERVED DEFICIENCIES: ANY OBSERVED DEFICIENCIES SHALL BE DESCRIBED ON THE FORM; THE OBSERVER SHALL ALSO INDICATE WHETHER A RE-OBSERVATION IS REQUIRED TO VERIFY CORRECTIVE ACTIONS HAVE BEEN PROPERLY TAKEN OR THAT THE CORRECTIVE ACTIONS ARE DEEMED VERIFIABLE BY THE SPECIAL INSPECTOR OR CITY INSPECTOR PRIOR TO INSPECTION APPROVAL.

STRUCTURAL TESTS AND INSPECTIONS

1. STRUCTURAL TESTS AND INSPECTIONS SHALL BE IN ACCORDANCE WITH THE 2022 CBC AND APPROVED HCAI TIO FORM "TESTING, INSPECTION, AND OBSERVATION PROGRAM."

2. WORK ITEMS REQUIRING THE CONSTANT PRESENCE AND CONTINUOUS INSPECTION BY THE PROJECT OR SPECIAL INSPECTOR HIRED BY THE OWNER (AS MAY BE DIRECTED BY HCAI) INCLUDE, BUT MAY NOT BE LIMITED TO, THE ITEMS LISTED BELOW. THE CONTRACTOR SHALL COORDINATE TEH WORK AND SCHEDULE WITH THE OWNER'S INSPECTOR TO ASSURE THAT ADEQUATE NOTICE IS GIVEN FOR THE INSPECTIONS TO OCCUR WHILE MAINTAINING PROJECT SCHEDULE. PERIODIC INSPECTIONS OF OTHER ITEMS ARE SPECIFIED IN HCAI "TESTING, INSPECTION AND OBSERVATION PROGRAM."

   A. POST INSTALLED ANCHORS

3. WORK ITEMS REQUIRING TESTING INCLUDE, BUT MAY NOT BE LIMITED TO, THE FOLLOWING:

   A. POST INSTALLED ANCHORS

4. THE TESTING TORQUES FOR POST-INSTALLED ANCHORS SHALL BE BASED ON THE MANUFACTURER'S RECOMMENDED INSTALLATION TORQUE AS APPROVED IN AN ICC-ES EVALUATION REPORT UNLESS OTHERWISE NOTED. TESTING SHALL CONFORM TO SECTION 1910A.5 OF THE CBC.

5. ACCEPTANCE CRITERIA FOR POST INSTALLED ANCHORS SHALL BE BASED ON ICC-ESR OR MANUFACTURER'S WRITTEN INSTRUCTION, ACCEPTABLE TO HCAI. FIELD TEST SHALL SATISFY THE MINIMUM ACCEPTANCE CRITERIA PER CBC 2022, SECTION 1910A5.5.

POST-INSTALLED ANCHORAGE INTO CONCRETE

1. ANCHORAGE SHALL BE INSTALLED PER MANUFACTURER'S WRITTEN INSTRUCTIONS, AND SHALL COMPLY WITH ACI 318 CHAPTER 17 AND CBC.

2. THE CONTRACTOR SHALL PREPARE A WRITTEN PROCEDURE PRIOR TO CONSTRUCTION FOR AN INSTALLATION METHOD TO AVOID DRILLING INTO OR CONTACTING IN ANY WAY REINFORCING STEEL AND OTHER EMBEDDED ITEMS. APPROVED METHODS COULD INCLUDE PLASTIC MARKINGS FORMED INTO THE CONCRETE SURFACE, OR USE OF GROUND PENETRATING RADAR EQUIPMENT SUCH AS HILTI FERROSCAN PS300. ANCHORS SHALL CLEAR EXISTING REBAR BY 1" MIN.

3. CONFORM WITH ICC RECOMMENDED VALUES FOR ANCHOR SPACING AND EDGE DISTANCE TO DEVELOP FULL (100%) ALLOWABLE TENSION/SHEAR LOADS LISTED IN ICC REPORTS. DO NOT USE REDUCED SPACING AND EDGE DISTANCE UNLESS SPECIFICALLY NOTED OTHERWISE BY THE DETAILS.

4. ANCHORS SHALL BE INSTALLED ACCORDING TO THE ANCHORING SYSTEM'S SPECIFICATIONS. DO NOT DAMAGE REINFORCING STEEL OR OTHER EMBEDDED ITEMS. FILL UNUSED HOLES WITH NON-SHRINK GROUT.

5. DRILLED HOLE SHALL BE CLEANED WITH A BRUSH AND CLEAN COMPRESSED AIR IN COMPLIANCE WITH ICC ESR REQUIREMENTS.

6. CONTRACTOR SHALL DETERMINE LOCATION OF EXISTING REINFORCING STEEL PRIOR TO DRILLING FOR ANCHORS, AND DRILL THE ANCHOR HOLES TO CLEAR THE REINFORCING STEEL PER THESE NOTES. NO REINFORCING STEEL SHALL BE NICKED, CUT OR DAMAGED IN ANY WAY. DAMAGED REINFORCING WILL BE REPLACED BY THE CONTRACTOR AT NO ADDITIONAL COST. IF THE LOCATION OF ANCHORS MUST BE MOVED SLIGHTLY TO ACCOMMODATE THE LOCATION OF EXISTING REINFORCING STEEL, THE CONTRACTOR SHALL PREPARED A SLIGHTLY MODIFIED DESIGN OF THE ITEM TO BE ANCHORED AND SUBMIT TO THE ENGINEER FOR APPROVAL PRIOR TO FABRICATION. THE MODIFIED DESIGN SUGGESTED BY THE CONTRACTOR SHALL INVOLVE THE ABSOLUTE MINIMUM RELOCATION OF ANCHORS TO MEET THE DETAILS AND REQUIREMENTS HEREIN, AND SHALL BE BASED ON A TEMPLATE BY THE CONTRACTOR WHICH ACCURATELY PORTRAYS THE POSITION OF THE ANCHORS.

7. WHILE ANCHORING STEEL MEMBERS AGAINST CONCRETE, PROVIDE LOCK-WASHER AND NUT AT EACH ANCHOR ROD.

   EXPANSION BOLTS IN CRACKED (AND UNCRACKED CONCRETE)

ACCEPTABLE PRODUCTS	ICC-ES EVALUATION REPORT
HILTI - KWIK BOLT TZ2	ESR-4266
SIMPSON - STRONG-BOLT 2	ESR-3037

AN EQUIVALENT PRODUCT ACCEPTABLE TO ENGINEER

HILTI KWIK BOLT TZ2

BOLT DIAMETER	EFFECTIVE MIN. DEPTH (U.N.O.)	INSTALLATION TORQUE (FT-LB) *
3/8"	2"	30
1/2"	3 1/4"	50
5/8"	4"	40
3/4"	4 3/4"	110

* ANCHORS MUST ATTAIN SPECIFIED TORQUE WITHIN 1/2 TURN OF THE NUT. INSTALLATION TORQUE APPLIES TO CARBON STEEL ANCHORS. REFER TO ICC REPORT FOR INSTALLATION TORQUE REQUIRED FOR STAINLESS STEEL ANCHORS.

SIMPSON STRONG-TIE STRONG-BOLT 2

BOLT DIAMETER	DEPTH (U.N.O.)	INSTALLATION TORQUE (FT-LB) *
3/8"	2 1/2"	30
1/2"	3 3/8"	60
5/8"	4 1/2"	90
3/4"	5"	150

* ANCHORS MUST ATTAIN SPECIFIED TORQUE WITHIN 1/2 TURN OF THE NUT. INSTALLATION TORQUE APPLIES TO CARBON STEEL ANCHORS. REFER TO ICC REPORT FOR INSTALLATION TORQUE REQUIRED FOR STAINLESS STEEL ANCHORS.

8. TEST POST-INSTALLED ANCHORS IN CONCRETE PER CBC. TENSION-TEST BOLTS TO TWICE THE ALLOWABLE TENSION VALUE LISTED IN THE APPLICABLE ICC REPORT FOR BOLTS OF THE SAME DIAMETER. TEST 100-PERCENT OF BOLTS USED FOR STRUCTURAL APPLICATIONS. TEST 50-PERCENT OF BOLTS USED FOR NON-STRUCTURAL APPLICATIONS SUCH AS EQUIPMENT ANCHORAGE, INCLUDING HALF OF THE BOLTS IN EACH GROUP. TEST 10-PERCENT OF BOLTS USED FOR SILL-PLATE BOLTING APPLICATIONS.

9. ALL BOLTS AND ANCHORS (INCLUDING NUTS AND WASHERS) EXPOSED TO WEATHER SHALL BE STAINLESS STEEL.

10. THE EMBEDMENT DEPTH OF POST-INSTALLED ANCHORS SPECIFIED IN THE INDIVIDUAL DRAWING DETAILS SHALL GOVERN OVER THE MINIMUM EMBEDMENTS SHOWN IN THE TABLES ABOVE. WHERE THE INDIVIDUAL DRAWING DETAIL SPECIFIES A CERTAIN PRODUCT AND THE CONTRACTOR WISHES TO USE AN ACCEPTABLE ALTERNATIVE PRODUCT, THE EMBEDMENT DEPTH FOR THAT ALTERNATIVE PRODUCT SHALL BE INCREASED AS REQUIRED BEYOND THE EMBEDMENT DEPTH SHOWN FOR THE SPECIFIED PRODUCT IN ORDER TO ACHIEVE THE SAME CAPACITIES IN SHEAR AND TENSION AS PUBLISHED IN THE ICC-ESR REPORT FOR THE PRODUCT AND EMBEDMENT DEPTH SPECIFIED IN THE DETAIL. IF THE EMBEDMENT DEPTH OF THE ALTERNATIVE PRODUCT MUST BE INCREASED TO MATCH THE CAPACITIES OF THE PRODUCT SPECIFIED IN THE DETAIL, THE LIMITATION ON CONCRETE THICKNESS SPECIFIED IN THE ICC-ESR REPORT FOR THE ALTERNATIVE PRODUCT MAY NOT BE VIOLATED. THE EMBEDMENT DEPTH FOR THE ALTERNATIVE PRODUCT MAY NOT BE LESSENED BELOW THE VALUE SHOWN IN THE DETAIL.

GENERAL (CONTINUED)

11. ALL EXISTING CONDITIONS, WHETHER OR NOT SPECIFICALLY NOTED ON THE DRAWINGS, SHALL BE VERIFIED PRIOR TO THE COMMENCEMENT OF ANY WORK. DO NOT PROCEED WITH ANY ITEM OR WORK THAT IS REASONABLY QUESTIONABLE WITHOUT ADVISING THE OWNER. OBTAIN DIRECTION FROM THE OWNER AS TO HOW TO PROCEED. SUBMIT ALL QUESTIONS ON "RFI" FORM.

12. ANY DISCREPANCIES FOUND IN THE CONTRACT DOCUMENTS SHALL BE BROUGHT TO THE ATTENTION OF THE ENGINEER FOR RESOLUTION PRIOR TO COMMENCING ANY WORK.

13. SHOP DRAWINGS REQUIRED BY THE PROJECT SPECIFICATIONS SHALL BE SUBMITTED TO THE ENGINEER FOR REVIEW PRIOR TO FABRICATION. DRAWINGS ARE REVIEWED BY THE ENGINEER FOR GENERAL CONFORMANCE TO THE DESIGN. REGARDLESS OF THE ENGINEER'S REVIEW, THE CONTRACTOR IS FULLY AND SOLELY RESPONSIBLE FOR COMPLETE AND SATISFACTORY SUBMITTAL AND CONFORMANCE TO THE CONTRACT DOCUMENTS. SHOP DRAWINGS WILL BE REJECTED FOR INCOMPLETENESS, LACK OF CALCULATIONS (IF REQUIRED) OR CHANGES WITHOUT PRE-APPROVAL. ALL STRUCTURAL CALCULATIONS AND DRAWINGS AS PART OF THE SHOP DRAWINGS SUBMITTAL SHALL BE SIGNED AND STAMPED BY A CALIFORNIA REGISTERED STRUCTURAL ENGINEER. FOR RESUBMITTALS, ALL CHANGES FROM THE PRIOR SUBMITTAL SHALL BE TIGHTLY ENCLOSED BY A "CLOUD" SO AS TO INDICATE ONLY THOSE AREAS CHANGED. WHEN THE CLOUDED DRAWINGS ARE RESUBMITTED, ONLY THE CLOUDED AREAS WILL BE REVIEWED.

14. THE CONTRACTOR SHALL SUPERVISE AND DIRECT THE WORK, AND SHALL BE SOLELY RESPONSIBLE FOR ALL CONSTRUCTION MEANS, METHODS, TECHNIQUES, SEQUENCES AND PROCEDURES. THE SUPPORTING SERVICES BY THE ENGINEER, WHETHER PERFORMED PRIOR TO, DURING, OR AFTER CONSTRUCTION, ARE PERFORMED SOLELY FOR THE PURPOSE OF ASSISTING IN QUALITY CONTROL AND IN ACHIEVING CONFORMANCE WITH CONTRACT DRAWINGS AND PROJECT SPECIFICATIONS; BUT THEY DO NOT GUARANTEE THE CONTRACTOR'S PERFORMANCE AND SHALL NOT BE CONSIDERED AS SUPERVISION OF CONSTRUCTION.

15. THE CONTRACTOR IS FULLY AND SOLELY RESPONSIBLE FOR ALL SHORING REQUIRED IN ORDER TO SAFELY ACHIEVE THE FINAL CONSTRUCTION SHOWN ON THE DRAWINGS. THIS INCLUDES, BUT IS NOT LIMITED TO, ANY TYPES OF SHORING REQUIRED FOR SOILS EXCAVATION AND BACKFILL WORK; SUPPORT OF STRUCTURAL ELEMENTS UNTIL THEY HAVE ACHIEVED THE NECESSARY STRENGTH TO PERFORM IN THE FINAL POSITION AND MANNER SHOWN ON THE DRAWINGS; AND SUPPORT OF STRUCTURAL ELEMENTS THAT ARE MODIFIED AND THEREBY REDUCED IN STRENGTH IN ANY WAY DURING CONSTRUCTION AS REQUIRED TO ACHIEVE THE FINAL CONSTRUCTION AS SHOWN ON THE DRAWINGS. ALL SHORING CALCULATIONS AND DRAWINGS SHALL BE STAMPED BY A CALIFORNIA REGISTERED ENGINEER AND SUBMITTED FOR REVIEW PRIOR TO PERFORMING THE WORK.

16. THE CONTRACTOR SHALL COORDINATE ALL UTILITY LOCATIONS WITH OTHER DRAWINGS AND SHALL CONDUCT A DETAILED SURVEY OF EXISTING UTILITIES TO IDENTIFY INTERFERENCES WITH THE NEW CONSTRUCTION. PROMPTLY NOTIFY THE ENGINEER OF ANY INTERFERENCES PRIOR TO PERFORMING THE WORK.

17. IN THE EVENT THAT THERE ARE ANY UTILITIES AFFECTED, ANY MODIFICATIONS SHALL BE THE RESPONSIBILITY OF THE CONTRACTOR AND NOT THAT OF THE OWNER. ALL OUTLETS EITHER ELECTRICAL OR MECHANICAL, OR ANY ASSOCIATED WORK OR MODIFICATIONS WILL BE A PART OF THE BID AND NOT TO BE CONSTRUED AS THE WORK OF THE OWNER. SUFFICIENT DUE DILIGENCE ON THE PART OF THE CONTRACTOR WILL ELIMINATE ANY POTENTIAL ISSUES AND ACCEPTANCE OF THE AGREEMENT SHALL BIND CONTRACTOR TO SAID ACCEPTANCE.

18. LOCATE ALL EMBEDDED ITEMS, REINFORCING STEEL AND TENDONS USING NON-DESTRUCTIVE MEANS PRIOR TO DRILLING OR CORING. DO NOT DAMAGE EMBEDDED ITEMS WITHOUT APPROVAL BY THE STRUCTURAL ENGINEER.

19. THE CONTRACTOR SHALL BE RESPONSIBLE FOR THE SAFETY OF WORK AREA DURING CONSTRUCTION PERIOD. THE CONTRACTOR SHALL PROTECT ADJACENT PROPERTY AND UTILITIES IN ACCORDANCE WITH ALL NATIONAL, STATE, AND LOCAL SAFETY ORDINANCES.

20. PROVIDE BARRICADING AND MAINTAIN ANY REQUIRED LIGHTS, WARNING, AND DIRECTIONAL SIGNS, AND OTHER PROTECTION NEAR AND ABOUT THE AREA OF THE WORK AS MAY BE REQUIRED BY THE OWNER, OR BY ANY OTHER GOVERNING AUTHORITY. PROVIDE NECESSARY MEANS TO PROTECT ANY SURROUNDING ADJACENT SITE STRUCTURES, PROPERTIES, SERVICING UTILITIES, PEDESTRIAN AND VEHICLE WAYS, AND MAINTAIN ALL SAFETY MEASURES UNTIL WORK IS COMPLETED.

21. SECURE THE CONSTRUCTION SITE. ANY PARTS OF WORK AREA WHICH ARE TO BE BARRICADED OR SEALED TO NON-CONSTRUCTION INDIVIDUALS MUST BE COORDINATED WITH AND APPROVED BY THE OWNER BEFORE PROCEEDING WITH THE WORK.

22. PROVIDE ALL MEASURES NECESSARY TO PROTECT THE STRUCTURE AND ADJACENT STRUCTURE(S), FINISHES AND UTILITIES DURING CONSTRUCTION.

23. PROVIDE AND ENGINEER ALL TEMPORARY STRUCTURAL AND SAFETY ELEMENTS REQUIRED TO ACCOMPLISH THE WORK.

24. THE CONTRACTOR SHALL EXERT EVERY EFFORT TO PREVENT DUST AND CONSTRUCTION DEBRIS FROM CONTAMINATING THE WORK AREA. THESE EFFORTS SHALL INCLUDE BUT NOT BE LIMITED TO PROVIDING A DAILY CLEANUP OF THE CONSTRUCTION AREA. THE CONTRACTOR SHALL REFER TO THE PROJECT SPECIFICATIONS FOR ADDITIONAL REQUIREMENTS.

25. CUTTING, CORING, SAW-CUTTING OR DRILLING THROUGH NEW STRUCTURAL MEMBERS OTHER THAN THOSE DETAILED ON STRUCTURAL DRAWINGS SHALL NOT BE DONE WITHOUT THE ENGINEER'S APPROVAL.

26. PERFORM ALL PATCHING AND RESTORATION AS REQUIRED BY THE WORK. THE WORK SHALL MATCH ADJACENT SURFACES UNLESS SPECIFICALLY NOTED OTHERWISE TO THE SATISFACTION OF THE OWNER.

SCOPE OF WORK

EXTERIOR ANCHORAGE OF A TEMPORARY DEAERATOR AND ANCHORAGE FOR REPLACEMENT OF EXISTING INTERIOR DEAERATOR.

DESIGN CRITERIA

DESIGN CONFORMS TO THE 2022 CALIFORNIA BUILDING CODE .

1. DEAD LOADS:
   - EQUIPMENT SELF WEIGHT PER MANUFACTURER

2. NONSTRUCTURAL COMPONENT SEISMIC FORCES:
   - I_p = 1.50
   - S_s = 2.060 g
   - S_1 = 0.817 g
   - S_{DS} = 1.648 g
   - a_p = 1.0
   - R_p = 2.5
   - Ω_0 = 2.0
   - z/h = 0.0

   TEMPORARY EQUIPMENT
   - F_p = 0.37*Wp

   PERMANENT EQUIPMENT
   - F_p = 0.74*Wp

GENERAL

1. ALL CONSTRUCTION AND WORKMANSHIP, INCLUDING MATERIALS, SHALL CONFORM TO THESE DRAWINGS AND THE CBC.

2. GOVERNING CODE AUTHORITY: HCAI

3. COMPLY FULLY WITH ALL CODES HAVING JURISDICTION OVER THE WORK. IF ANY WORK SHOWN OR INDICATED ON THE DRAWINGS IS IN CONFLICT WITH ANY CODE HAVING JURISDICTION, BRING IT TO THE ATTENTION OF THE OWNER PRIOR TO THE COMMENCEMENT OF ANY WORK WHICH WOULD BE AFFECTED BY IT.

4. WHERE NOT INDICATED OTHERWISE, THE LATEST EDITION OF ALL CITED DOCUMENTS SHALL GOVERN.

5. THE TERM CBC IN THESE DRAWINGS MEANS 2022 CALIFORNIA BUILDING CODE, CALIFORNIA CODE OF REGULATIONS, TITLE 24, ALL PARTS AND VOLUMES.

6. ALL INFORMATION, DIMENSIONS, AND ELEVATIONS SHOWN OR NOTED TO EXISTING STRUCTURE ARE BASED ON BEST INFORMATION CURRENTLY AVAILABLE AT THE TIME OF THE PREPARATION OF THESE DRAWINGS. NO WARRANTY IS IMPLIED AS TO THE ACCURACY OF EXISTING CONDITIONS. THE CONTRACTOR SHALL REFER TO THE ORIGINAL CONSTRUCTION DOCUMENTS FOR INFORMATION REGARDING EXISTING CONSTRUCTION AND SHALL FIELD VERIFY ALL CONDITIONS. IF CONDITIONS BECOME APPARENT WHICH DIFFER FROM THE CONDITIONS SHOWN HEREIN, THEY SHALL BE BROUGHT TO THE IMMEDIATE ATTENTION OF THE OWNER. HOWEVER, ANY SIGNIFICANT CONFLICTS SHALL BE RESOLVED AS NOTED.

7. THE CONTRACTOR SHALL:
   A. BECOME FAMILIAR WITH ALL CONTRACT DOCUMENTS.
   B. CHECK ALL DIMENSIONS.
   C. BE RESPONSIBLE FOR COORDINATION OF ALL TRADES TO ASSURE PROPER CONSTRUCTION OF THE PROJECT.
   ALL DISCREPANCIES SHALL BE CALLED TO THE ATTENTION OF THE ENGINEER AND SHALL BE RESOLVED BEFORE PROCEEDING WITH THE WORK.

8. DIMENSIONS: DIMENSIONS TAKE PRECEDENCE OVER SCALE OF DRAWING. RELY ON WRITTEN DIMENSIONS GIVEN AND FIELD VERIFICATION. IF DISCREPANCIES ARE FOUND, NOTIFY THE OWNER BEFORE THE COMMENCEMENT OR RESUMPTION OF WORK. IF NO DIMENSION ARE GIVEN, NOTIFY THE OWNER FOR CLARIFICATIONS. ALL NOTIFICATIONS SHALL BE BY "RFI".

9. DRAWINGS INDICATE GENERAL AND TYPICAL DETAILS OF CONSTRUCTION. NOTES AND DETAILS ON DRAWINGS TAKE PRECEDENCE OVER "GENERAL NOTES" AND TYPICAL DETAILS. WHERE CONDITIONS ARE NOT SPECIFICALLY INDICATED BUT ARE OF SIMILAR CHARACTER TO DETAILS SHOWN, SIMILAR DETAILS OF CONSTRUCTION SHALL BE USED SUBJECT TO PRIOR REVIEW BY THE ENGINEER.

10. CONDITIONS NOTED AS "EXISTING" OR (E) ARE TO REMAIN U.N.O. PROTECT AS REQUIRED. "EXISTING" CONSTRUCTION REMOVED BY THE CONTRACTOR FOR ANY REASON SHALL BE REPLACED TO MATCH EXISTING AT NO ADDITIONAL COST TO THE OWNER. ALL MATERIALS, FEATURES OR CONDITIONS NOT SPECIFICALLY IDENTIFIED AS "EXISTING" OR (E) ARE CONSIDERED NEW WORK AND ARE PART OF THE PROJECT SCOPE OF WORK.

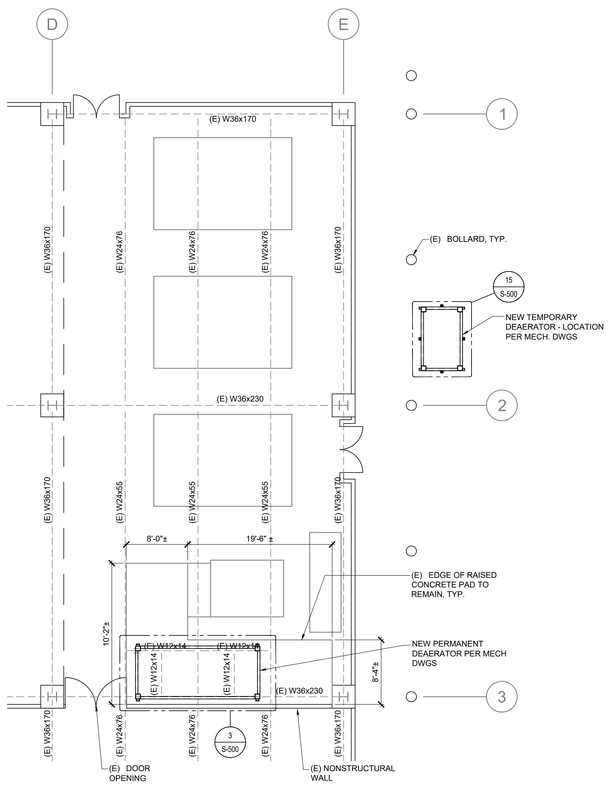

KEY PLAN 1/8"=1'-0" 1

NOT TO SCALE

APPROVAL

REVIEWED IN ACCORDANCE WITH THE REQUIREMENTS OF T24, CCR
APPROVED
Department of Health Care Access & Information
Office of Statewide Hospital Planning & Development
8/3/2023, 7:23:46 AM
S230562-36-00
Allen Cheng

CLIENT

SAN BERNARDINO COUNTY

SAN BERNANDINO COUNTY
PROJECT AND FACILITIES MANAGEMENT DEPARTMENT

385 NORTH ARROWHEAD AVENUE, 3RD FLOOR
SAN BERNARDINO, CA 92415-0184

PROJECT NAME

ARMC DEAERATOR #1 REPLACEMENT

PROJECT NO.
WBSE # 10.10.0847
CIP # 20-011
HCAI # S230562-36-00

FACILITY NO.
17282

BUILDING NO.
BLD-00075 CENTRAL PLANT

400 N. PEPPER AVENUE
COLTON, CA 92324-1801

ENGINEER/ARCHITECT

IDS

IDS GROUP

1 PETERS CANYON ROAD, SUITE 130
IRVINE, CA. 92606
TEL: 949-387-8500, FAX: 949-387-0800

STAMP

REGISTERED PROFESSIONAL ENGINEER
FARID M. ELHASSAN
No. 3930
STRUCTURAL
STATE OF CALIFORNIA

DATE SIGNED: 02-17-2023

STAMP

REGISTERED PROFESSIONAL ENGINEER
DARREN B. SMITH
No. 30841
Exp. 12-31-23
MECHANICAL
STATE OF CALIFORNIA

ISSUE

REV.	DESCRIPTION	DATE
	HCAi SUBMITTAL	04/28/23
A	BACK CHECK #1	06/16/23
B	BACK CHECK #2	07/28/23

PROJECT IDENTIFICATION

THIS DRAWING WAS CREATED IN AUTODESK AUTOCAD V. 2021 UNLESS OTHERWISE NOTED.

THE ORIGINAL SIZE OF THIS SHEET IS 30" X 42"

THESE DRAWINGS AND SPECIFICATIONS ARE THE PROPERTY AND COPYRIGHT OF IDS GROUP AND SHALL NOT BE USED ON ANY OTHER PROJECT OR LOCATIONS EXCEPT AS DESCRIBED ON THE DRAWINGS, WITHOUT THE WRITTEN AGREEMENT WITH IDS GROUP.

IDS PROJECT NO.	22X066.02
DRAWN BY	XX
CHECKED BY	XX
APPROVED BY	XX

SHEET TITLE

GENERAL NOTES & KEY PLAN

SHEET NUMBER

S-001

SHEET NO. 15 OF 29

PLAN CHECK - NOT FOR CONSTRUCTION

IDS GROUP - FILE LOCATION: S:\PROJECTS\2022\SHARED\22X066.02 ARMC - REPLACEMENT DEAERATOR 1\05 CAD\03 STRUC\S-001 - GENERAL NOTES PLOT DATE: 6/6/2023 5:10:27 PM USER: MATTHEW.MICHNEWICH

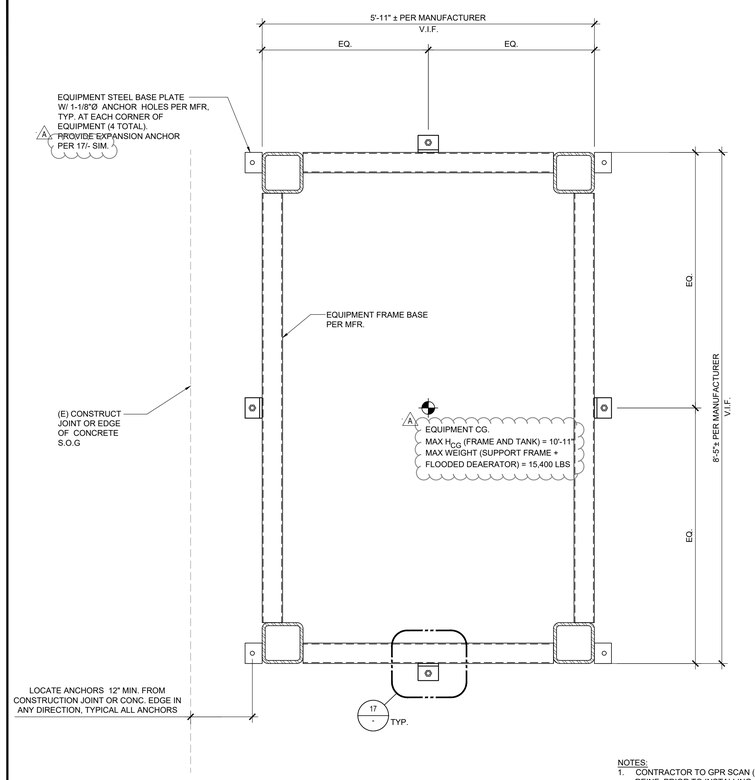

EQUIPMENT PLAN

NOTES:
1. CONTRACTOR TO GPR SCAN (E) CONCRETE AND LOCATE REINF. PRIOR TO INSTALLING ANCHORS. LOCATE ANCHORS MIN 1" CLR OF (E) REINF. DO NOT CUT OR DAMAGE (E) REINF.

TEMPORARY DEAERATOR PLAN | 1"=1'-0" | 15

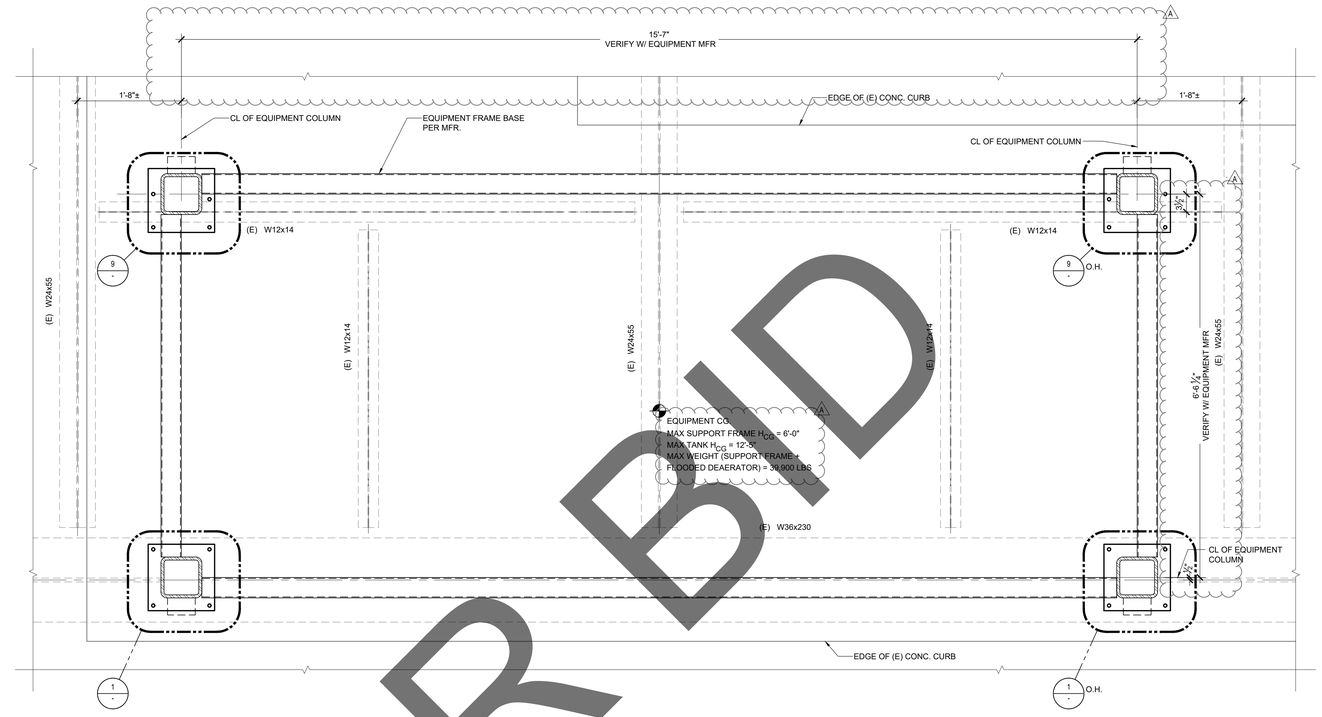

EQUIPMENT PLAN

NOTES:
1. CONTRACTOR TO GPR SCAN (E) CONCRETE AND LOCATE REINF. PRIOR TO INSTALLING ANCHORS. LOCATE ANCHORS MIN 1" CLR OF (E) REINF. DO NOT CUT OR DAMAGE (E) REINF.

PERMANENT DEAERATOR PLAN | 1"=1'-0" | 3

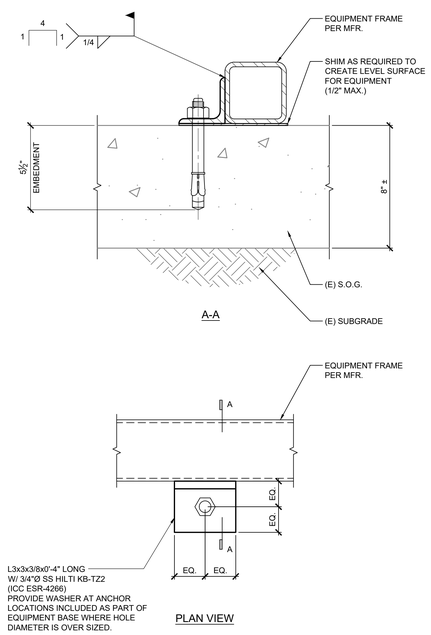

CONNECTION DETAIL | N.T.S. | 17

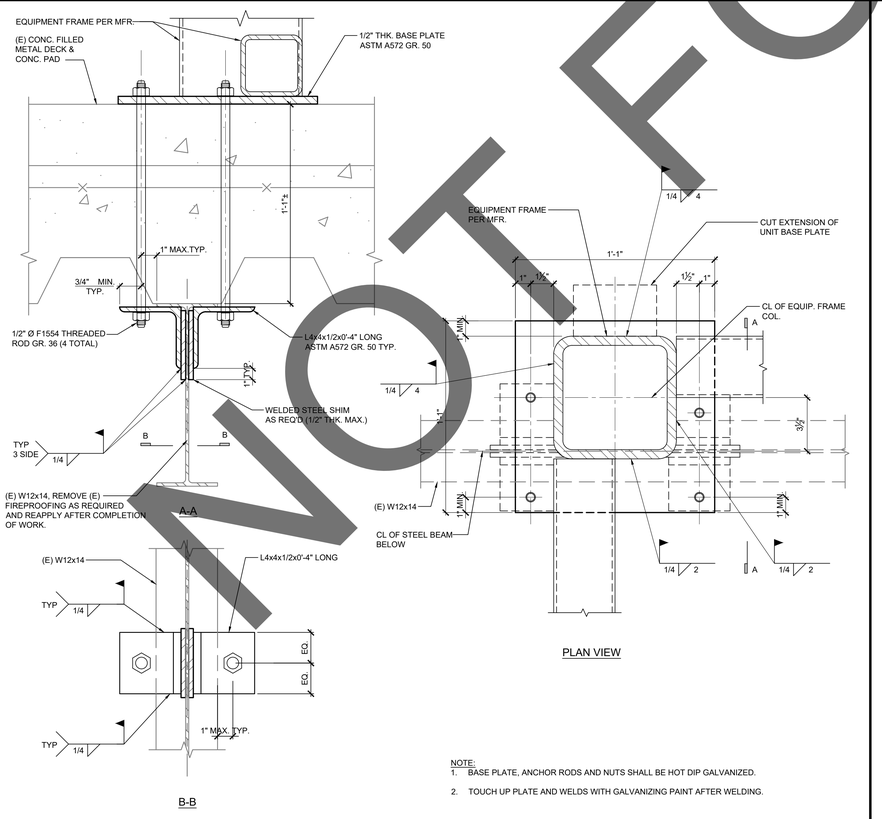

NOTE:
1. BASE PLATE, ANCHOR RODS AND NUTS SHALL BE HOT DIP GALVANIZED.
2. TOUCH UP PLATE AND WELDS WITH GALVANIZING PAINT AFTER WELDING.

CONNECTION DETAIL | N.T.S. | 9

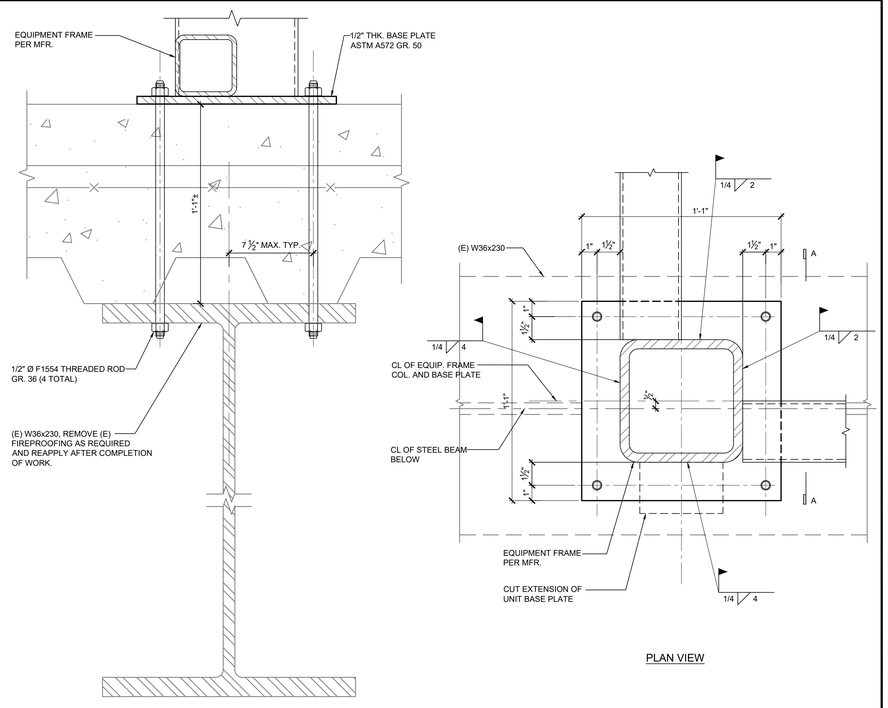

NOTE:
1. BASE PLATE, ANCHOR RODS AND NUTS SHALL BE HOT DIP GALVANIZED.
2. TOUCH UP PLATE AND WELDS WITH GALVANIZING PAINT AFTER WELDING.

CONNECTION DETAIL | N.T.S. | 1

NOT FOR BID

APPROVAL

REVIEWED IN ACCORDANCE WITH THE REQUIREMENTS OF T24, CCR
APPROVED
Department of Health Care Access & Information
Office of Statewide Hospital Planning & Development
6/9/2023, 7:23:46 AM
S230562-36-00
Allen Cheng

CLIENT

SAN BERNARDINO COUNTY

SAN BERNANDINO COUNTY
PROJECT AND FACILITIES MANAGEMENT DEPARTMENT

385 NORTH ARROWHEAD AVENUE, 3RD FLOOR
SAN BERNARDINO, CA 92415-0184

PROJECT NAME

ARMC DEAERATOR #1 REPLACEMENT

PROJECT NO.
WBSE # 10.10.0847
CIP # 20-011
HCAI # S230562-36-00

FACILITY NO.
17282

BUILDING NO.
BLD-00075 CENTRAL PLANT

400 N. PEPPER AVENUE
COLTON, CA 92324-1801

ENGINEER/ARCHITECT

IDS

IDS GROUP

1 PETERS CANYON ROAD, SUITE 130
IRVINE, CA 92606
TEL: 949-387-8500, FAX: 949-387-0800

STAMP

REGISTERED PROFESSIONAL ENGINEER
FARHAD SHAHROKHI
No. 3930
STRUCTURAL
STATE OF CALIFORNIA
DATE SIGNED: 02-17-2023

STAMP

REGISTERED PROFESSIONAL ENGINEER
DARREN B. SMITH
No. 30841
Exp. 12-31-23
MECHANICAL
STATE OF CALIFORNIA

ISSUE

REV.	DESCRIPTION	DATE
	HCAi SUBMITTAL	04/28/23
A	BACK CHECK #1	06/16/23
B	BACK CHECK #2	07/28/23

PROJECT IDENTIFICATION

THIS DRAWING WAS CREATED IN AUTODESK AUTOCAD V. 2021 UNLESS OTHERWISE NOTED.

THE ORIGINAL SIZE OF THIS SHEET IS 30" X 42"

THESE DRAWINGS AND SPECIFICATIONS ARE THE PROPERTY AND COPYRIGHT OF IDS GROUP AND SHALL NOT BE USED ON ANY OTHER PROJECT OR LOCATIONS EXCEPT AS DESCRIBED ON THE DRAWINGS, WITHOUT THE WRITTEN AGREEMENT WITH IDS GROUP.

IDS PROJECT NO.	22X066.02
DRAWN BY	XX
CHECKED BY	XX
APPROVED BY	XX

SHEET TITLE

PLANS & DETAILS

SHEET NUMBER

S-500

SHEET NO. 16 OF 29

PLAN CHECK - NOT FOR CONSTRUCTION

IDS GROUP - FILE LOCATION: S:\PROJECTS\2022\SHARED\22X066.02 ARMC - REPLACEMENT DEAERATOR 1\05 CAD\03 STRUC\S-500 - DETAILS PLOT DATE: 6/6/2023 5:10:31 PM USER: MATTHEW.MICHNEVICH

HCAI REQUIREMENTS

1. THE INTENT OF THE DRAWINGS IS TO RECONSTRUCT THE HOSPITAL BUILDING IN ACCORDANCE WITH TITLE 24, CALIFORNIA CODE OF REGULATIONS AND THE LIFE SAFETY CODE. SHOULD ANY CONDITIONS DEVELOP NOT COVERED BY THE CONTRACT DOCUMENTS WHEREIN THE FINISHED WORK WILL NOT COMPLY WITH SAID TITLE 24, CALIFORNIA CODE OF REGULATIONS. A CHANGE ORDER DETAILING AND SPECIFYING THE REQUIRED WORK SHALL BE SUBMITTED TO AND APPROVED BY HCAI BEFORE PROCEEDING WITH THE WORK.
2. ALL WORK SHALL BE IN ACCORDANCE WITH THE REQUIREMENTS OF TITLE 22, CALIFORNIA CODE OF REGULATIONS AND TITLE 24----ALL APPLICABLE PARTS OF LATEST EFFECTIVE EDITIONS.
3. ALL ADDENDA AND CHANGE ORDERS SHALL BE SIGNED BY THE ARCHITECT/ ENGINEER OF RECORD. APPROVAL TO HCAI (OFFICE OF STATEWIDE HEALTH PLANNING AND DEVELOPMENT). RESPONSIBILITIES OF ARCHITECT/ ENGINEER OF RECORD AND CONSULTANTS, PROJECT INSPECTOR, AND GENERAL CONTRACTOR SHALL BE IN ACCORDANCE WITH C.C.R. TITLE 24, PART 1, SECTION 7-141, 7-145,7-143. VERIFIED REPORTS OF CONSTRUCTION ARE REQUIRED BY C.C.R. TITLE 24, PART 1, SECTION 7-151.
4. NO WORK SHALL COMMENCE AT THE PROJECT SITE BEFORE THE BUILDING PERMIT IS FULLY EXECUTED WITH THE START DATE ENTERED AND SIGNED BY THE OWNER. HCAI AND GENERAL CONTRACTOR AND AVAILABLE FOR POSTING AT JOBSITE.
5. CONSTRUCTION SHALL CONFORM TO ALL GOVERNMENTAL AGENCIES AND CODES HAVING JURISDICTION INCLUDING BUT NOT LIMITED TO:

   2022 CALIFORNIA BUILDING CODE (CBC) PART 2, TITLE 24, CCR

   2022 CALIFORNIA ELECTRICAL CODE (CEC) PART 3, TITLE 24, CCR

   2022 CALIFORNIA MECHANICAL CODE (CMC) PART 4, TITLE 24, (CCR)

   2022 CALIFORNIA PLUMBING CODE (CPC) PART 5, TITLE 24, (CCR)

   2022 CALIFORNIA FIRE CODE (CFC) PART 9, TITLE 24, (CCR)

GENERAL CONSTRUCTION NOTES

1. PROVIDE SHOP DRAWINGS AND EQUIPMENT SUBMITTALS TO THE COUNTY PROJECT MANAGER FOR REVIEW PRIOR TO BEING SUBMITTED TO THE PROJECT ENGINEER
2. INSTALLATION SHALL CONFORM TO THE REQUIREMENTS OF THE 2022 CALIFORNIA MECHANICAL CODE, 2022 CALIFORNIA BUILDING CODE, AND OTHER APPLICABLE CODES AND REGULATIONS, INCLUDING 2022 CALIFORNIA ENERGY CONSERVATION STANDARDS DIVISION T-24.
3. THE DESIGN DRAWINGS AND PLANS ARE DIAGRAMMATIC IN NATURE. PROVIDE LABOR, MATERIALS, AND INCIDENTALS NECESSARY OR REQUIRED FOR THE INSPECTION, TESTING, ADJUSTMENT AND COMPLETION IN ALL RESPECTS FOR PROPER AND SMOOTH OPERATION OF THE MECHANICAL SYSTEMS.
4. EQUIPMENT SHALL BE INSTALLED IN STRICT ACCORDANCE WITH THE EQUIPMENT MANUFACTURER'S INSTRUCTIONS AND RECOMMENDATIONS. PROVIDE FITTINGS, TRANSITIONS, DAMPERS, VALVES, DEVICES AND MATERIALS REQUIRED FOR A COMPLETE WORKING INSTALLATION.
5. COORDINATE WITH ALL OTHER TRADES THE LOCATIONS OF THERMOSTATS, SENSORS AND OTHER DEVICES PRIOR TO INSTALLATION.
6. MAINTENANCE LABELS SHALL BE AFFIXED TO MECHANICAL EQUIPMENT. PROVIDE OWNER WITH FIVE (5) COPIES OF THE MAINTENANCE AND OPERATING MANUAL AND MANUFACTURERS SUPPLIERS ONE YEAR PARTS AND LABOR WARRANTY FOR ALL INSTALLED EQUIPMENT.
7. PROVIDE CODE-COMPLIANT FIRE/SOUND STOPPING AT DUCT, PIPING, CONDUIT PENETRATIONS THROUGH ALL TYPES OF BUILDING CONSTRUCTION TO ACHIEVE FIRE, SMOKE, AND SOUND RATINGS.
8. EQUIPMENT, DUCTS, PIPING, INSULATION, FLEX CONNECTIONS, CONTROL ITEMS, AND OTHER DEVICES AND MATERIALS INSTALLED OUTSIDE OF THE BUILDING OR OTHERWISE EXPOSED TO THE WEATHER SHALL BE WEATHERPROOFED.
9. HVAC EQUIPMENT SHALL BE CERTIFIED BY THE CALIFORNIA ENERGY COMMISSION TO COMPLY WITH EFFICIENCY STANDARDS PER TITLE 24, PART 6, SECTIONS 111 AND 112.
10. POLLUTANT CONTROL: AT THE TIME OF ROUGH INSTALLATION AND DURING STORAGE ON THE CONSTRUCTION SITE UNTIL FINAL STARTUP OF THE HEATING, COOLING, AND VENTILATING EQUIPMENT, DUCT AND OTHER RELATED AIR DISTRIBUTION COMPONENT OPENINGS SHALL BE COVERED WITH TAPE, PLASTIC, SHEET METAL OR OTHER METHODS ACCEPTABLE TO THE ENFORCING AGENCY TO REDUCE THE AMOUNT OF DUST, WATER, AND DEBRIS WHICH MAY ENTER THE SYSTEM.
11. BALANCING AND ADJUSTING: SYSTEM START-UP, BALANCING, TESTING AND ADJUSTING OF THE AFFECTED PORTIONS OF THE MECHANICAL SYSTEM SHALL BE THE RESPONSIBILITY OF AN INDEPENDENT THIRD PARTY APPROVED TESTING AND BALANCING CONTRACTOR. TESTING AND BALANCING CONTRACTOR SHALL BE AN AABC OR NEBB MEMBER. TEST AND BALANCE CONTRACTOR SHALL OBTAIN, COMPLY, FILL OUT, AND SUBMIT TO THE COMMISSIONING AGENT COPIES OF THE CERTIFICATE OF COMPLIANCE AND REQUIRED ACCEPTANCE TEST FORMS AND ALL OTHER PROCESS COMPLIANCE FORMS AND WORKSHEETS REQUIRED BY THIS PROJECT. THE PUMPS SHALL BE BALANCED TO WITHIN 10% OF THE LISTED QUANTITIES, AND WATER SYSTEM EQUIPMENT SHALL BE BALANCED TO WITHIN 5% OF THE LISTED QUANTITIES. THE COST OF THE INDEPENDENT TESTING AND BALANCING CONTRACTOR SHALL BE INCLUDED IN THE MECHANICAL CONTRACTOR BID.
12. UPON COMPLETION OF TESTING, OPERATE EQUIPMENT TO VERIFY THAT SYSTEMS FUNCTION PROPERLY. AFTER VERIFYING THE PROPER OPERATION, DEMONSTRATE THE OPERATION OF SYSTEMS AND EQUIPMENT TO THE OWNER'S REPRESENTATIVES. PROVIDE ONE WEEK NOTICE AND SCHEDULE THE DEMONSTRATION WITH THE OWNER.
13. ALL WORK SHALL BE GUARANTEED TO BE FREE FROM DEFECTS IN MATERIAL AND WORKMANSHIP FOR A PERIOD OF ONE YEAR FROM DATE OF FINAL ACCEPTANCE OF THE WORK. REPLACE OR REPAIR DEFECTIVE MATERIALS OR REPAIR DEFECTIVE WORK AT NO ADDITIONAL COST.
14. PIPE LABELING:
    - CHILLED WATER (CHW): GREEN BACKGROUND COLOR WITH WHITE LETTERS.
    - CONDENSER WATER (CW): GREEN BACKGROUND COLOR WITH WHITE LETTERS.
16. VALVE TAGS: VALVE TAGS SHALL BE OF BRASS MATERIAL AND TYPE. SERVICE AND TAG LETTERING AS FOLLOWS:
    - CHILLED WATER: CHW
    - CONDENSER WATER: CW
    - REFRIGERANT: REF
17. EQUIPMENT LABELING: EQUIPMENT LABEL SHALL BE BRASS OR ANODIZED ALUMINUM, 0.032-INCH MINIMUM THICKNESS. LENGTH AND WIDTH VARY FOR REQUIRED LABEL CONTENT, BUT NOT LESS THAN 2-1/2 BY 3/4 INCH. LETTER SIZE SHALL BE MINIMUM 1/4 INCH IF VIEWING DISTANCE IS LESS THAN 24 INCHES, 1/2 INCH IF VIEWING DISTANCE IS UP TO 72 INCHES AND PROPORTIONALLY LARGER LETTERING FOR GREATER VIEWING DISTANCE.

LEGEND & ABBREVIATIONS

SYMBOL	ABBR.	DESCRIPTION	SYMBOL	ABBR.	DESCRIPTION
		EQUIPMENT DESIGNATION & NUMBER		APPROX.	APPROXIMATE
T		ROOM THERMOSTAT		B.O.P	BOTTOM OF PIPE
SD		SMOKE DETECTOR		S.S	STAINLESS STEEL
	P.O.C.	POINT OF CONNECTION		AC	AIR CONDITIONING UNIT
	P.O.D.	POINT OF DISCONNECT		AP	ACCESS PANEL
U/C		UNDERCUT DOOR		B.D.D.	BACK DRAFT DAMPER
D/L		DOOR LOUVER		CB	CIRCUIT BREAKER
X		NOTE DESIGNATION		CP	CONTROL PANEL
M		MOTORIZED DAMPER OR VALVE ACTUATOR		CFM	CUBIC FEET PER MINUTE
	BDD	BACKDRAFT DAMPER		CONC.	CONCRETE
		PIPE UNION		COND.	CONDENSATE
HWS		HOT WATER SUPPLY		D	DRAIN
HWR		HOT WATER RETURN		D.B.	DRY BULB
		REDUCER		DN.	DOWN
		CONDENSATE DRAIN, DRAIN		ENT.	ENTERING
		FLOW INDICATOR, FLOW METER		EF	EXHAUST FAN
		FLEXIBLE PIPE CONNECTOR		E.S.P.	EXTERNAL STATIC PRESSURE (INCHES OF WATER)
	GV	GATE VALVE		TYP.	TYPICAL
		BALANCING VALVE		A.F.F	ABOVE FINISHED FLOOR
		PLUG VALVE		FLA	FULL LOAD AMPS
		CHECK VALVE		FT.	FEET
	PRV, T&PRV	PRESSURE RELIEF VALVE, TEMPERATURE & PRESSURE RELIEF VALVE		GC	GENERAL CONTRACTOR
	AAV	AUTOMATIC AIR VENT		HP	HORSEPOWER
	BV	BALL VALVE		BHP	BRAKE HORSEPOWER
	BFV	BUTTERFLY VALVE		IN.	INCHES
	IV	ACTUATED BUTTERFLY VALVE		KW	KILOWATTS
	P.G. OR P.I.	PRESSURE GAGE, PRESSURE INDICATOR		L.R.A.	LOCKED ROTOR AMPS
	T.G. OR T.I.	THERMOMETER, TEMPERATURE INDICATOR		M.C.A.	MINIMUM CIRCUIT AMPS
	CV	2-WAY CONTROL VALVE		R.L.A.	RATED LOAD AMPS
		3-WAY CONTROL VALVE		M.O.C.P.	MAX. OVER CURRENT PROTEC. AMPS
		PRESSURE REDUCING VALVE		PH	PHASE
	BF	BLIND FLANGE		FD	FUSED DISCONNECT
	T/P	TEMPERATURE/ PRESSURE TEST PORT		NFD	NON FUSED DISCONNECT
		STRAINER		PRESS.	PRESSURE
		STRAINER WITH BLOW DOWN VALVE		RPM	REVOLUTIONS PER MINUTE
		VALVE IN VERTICAL PIPE		MIN.	MINIMUM
CWS		CONDENSER WATER SUPPLY		B.O.D.	BOTTOM OF SHEET METAL DUCT
CWR		CONDENSER WATER RETURN		A.F.F.	ABOVE FINISHED FLOOR
CHWS		CHILLED WATER SUPPLY		UTR	UP THRU ROOF
CHWR		CHILLED WATER RETURN		DTR	DOWN THRU ROOF
		EXISTING DUCT/PIPING		U.N.O.	UNLESS NOTED OTHERWISE
		EXISTING DUCT/PIPING TO BE REMOVED		O.C.	ON CENTER
		EXISTING EQUIPMENT TO BE REMOVED		TEMP	TEMPORARY
FM FM	FM	FLOWMETER		SCV	SILENT CHECK VALVE

MECHANICAL SHEET INDEX

S.NO.	SHEET #	SHEET TITLE	SCALE
1	M-001	MECHANICAL NOTES LEGEND AND ABBREVIATIONS	NO SCALE
2	M-002	MECHANICAL SPECIFICATIONS	NO SCALE
3	M-101	MECHANICAL FLOOR PLAN TEMPORARY WORK	1/4"=1'-0"
4	M-102	MECHANICAL FLOOR PLAN DEMOLITION	1/4"=1'-0"
5	M-201	MECHANICAL FLOOR PLAN	1/4"=1'-0"
6	M-501	MECHANICAL DETAILS	NO SCALE

SEISMIC BRACING NOTES

A. PROVIDE SEISMIC BRACING OF MECHANICAL, PLUMBING AND FIRE PROTECTION SYSTEMS IN ACCORDANCE WITH REQUIREMENTS OF THE CURRENT CALIFORNIA BUILDING CODE IMPORTANCE FACTOR OR 1.5.

B. DUCTWORK AND PIPING SHALL BE SUPPORTED AND BRACED WITH ONE OF THE FOLLOWING HCAI PRE-APPROVED SYSTEMS:

1. MASON SEISMIC RESTRAINT COMPONENTS FOR SUSPENDED UTILITIES. HCAI PRE-APPROVAL OPM-0043-13.
2. B-LINE / TOLCO OPM-0052.

C. CALCULATIONS AND DRAWINGS SHALL BE SUBMITTED FOR DUCTWORK, PIPING AND SUPPORTS AND BRACING SHOWING:

1. LOCATION OF SEISMIC BRACING.
2. REACTION FORCES TO THE SUPPORTING STRUCTURE.
3. MANUFACTURER'S DESIGNATION OF SUPPORT DEVICES.

CALCULATION SHALL INCLUDE REFERENCES TO THE MANUFACTURER'S LITERATURE FOR ALLOWABLE LOADS ON THE DEVICES. CALCULATIONS AND DRAWINGS SHALL BE APPROVED, STAMPED, AND SIGNED BY A LICENSED CALIFORNIA ENGINEER PRIOR TO SUBMITTING THEM FOR REVIEW TO THE MECHANICAL, STRUCTURAL ENGINEER OF RECORD AND TO HCAI.

D. SEISMIC BRACING POINTS SHALL BE SUBMITTED ON CONTRACTOR'S COORDINATED SHOP DRAWINGS.

E. ANCHORAGE OF ALL EQUIPMENT SHALL BE DETAILED EXCEPT FOR:
IF THERE ARE THE EQUIPMENTS FOR THIS PROJECT THAT WEIGH EQUAL OR LESS THAN 400 LBS AND HAS A CENTER OF MASS LOCATED LESS THAN 4FT, THEN PROVIDE SUPPORT AND ATTACHMENT DETAILS ON THE DRAWINGS. CALCULATIONS NEED NOT BE PROVIDED FOR HCAI REVIEW. FURNITURE OR TEMPORARY OR MOVABLE EQUIPMENT AND EQUIPMENT WEIGHING LESS THAN 20 LBS THAT IS SUPPORTED AND ANCHORED TO RESIST THE FORCES PRESCRIBED IN CHAPTER 13 OF ASCE 7-16, 2022 CBC AND THE ANCHORAGE SHALL BE APPROVED BY THE STRUCTURAL ENGINEER OF RECORD AND OSHPD AS PART OF FIELD REVIEWS/ INSPECTIONS. THE INSPECTOR OF RECORD SHALL BE ASSURE THAT THE ABOVE REQUIREMENTS ARE ENFORCED.

F. SPACING, SUPPORT AND BRACING OF MECHANICAL & FIRE SPRINKLER PIPING SHALL COMPLY WITH THE 2019 EDITION OF NFPA 13 AND CHAPTER 13 OF ASCE 7, 2022 CBC.

G. A COPY OF CHOSEN BRACING SYSTEM(S) INSTALLATION GUIDE/ MANUAL SHALL BE ON THE JOBSITE PRIOR TO STARTING THE INSTALLATION OF THE COMPONENT, EQUIPMENT HANGERS AND/ OR BRACES.

H. MECHANICAL CONTRACTOR TO PROVIDE DUCT, PIPING SUPPORT SHOP DRAWINGS FOR STRUCTURAL ENGINEER TO REVIEW.

I. ALL DUCTS SHALL HAVE A MINIMUM TWO TRANSVERSE AND ONE LONGITUDINAL BRACING IN EACH RUN.

APPLICABLE CODES & STANDARDS

2022 CALIFORNIA ADMINISTRATIVE CODE, PART 1, TITLE 24 C.C.R. *
2022 CALIFORNIA BUILDING CODE (CBC), PART 2, TITLE 24 C.C.R
2022 CALIFORNIA ELECTRICAL CODE (CEC), PART 3, TITLE 24 C.C.R.
2022 CALIFORNIA MECHANICAL CODE (CMC) PART 4, TITLE 24 C.C.R
2022 CALIFORNIA PLUMBING CODE (CPC), PART 5, TITLE 24 C.C.R.
2022 CALIFORNIA ENERGY CODE (CEC), PART 6, TITLE 24 C.C.R.
2022 CALIFORNIA FIRE CODE, PART 9, TITLE 24 C.C.R.
2022 CALIFORNIA GREEN BUILDING STANDARDS CODE, PART 11, TITLE 24 C.C.R.
2022 CALIFORNIA REFERENCED STANDARDS, PART 12, TITLE 24 C.C.R.

NFPA	NATIONAL FIRE PROTECTION ASSOCIATION, SECTION 96
UL	UNDERWRITERS LABORATORIES, INC.
ASTM	AMERICAN SOCIETY FOR TESTING AND MATERIALS
ANSI	AMERICAN NATIONAL STANDARDS INSTITUTE
NEMA	NATIONAL ELECTRICAL MANUFACTURER'S ASSOCIATION
ADA	AMERICANS WITH DISABILITIES ACT
OSHA	OCCUPATIONAL SAFETY AND HEALTH ADMINISTRATION
EPA	ENVIRONMENTAL PROTECTION AGENCY

*CALIFORNIA ADMINISTRATIVE CODE, PART 1, CHAPTER 10, ADMINISTRATIVE REGULATIONS FOR THE CALIFORNIA ENERGY COMMISSION (CEC).

INSULATION NOTES

PIPING INSULATION SHALL BE AS PER CALIFORNIA ENERGY CODE TABLE 120.3-A

TABLE 120.3-A PIPE INSULATION THICKNESS

FLUID TEMPERATURE RANGE (°F)	CONDUCTIVITY RANGE (IN BTU-INCH PER HOUR PER SQUARE FOOT PER °F)	INSULATION MEAN RATING TEMPERATURE (°F)	NOMINAL PIPE DIAMETER (IN INCHES)				
			<1 TO 1	1 TO <1.5	1.5 TO <4	4 TO <8	8 AND LARGER
			INSULATION THICKNESS REQUIRED (IN INCHES)				
SPACE HEATING, HOT WATER (STEAM, STEAM CONDENSATE & HOT WATER) & SERVICE WATER HEATING SYSTEM							
ABOVE 350	0.32 - 0.34	250	4.5	5.0	5.0	5.0	5.0
251 - 350	0.29 - 0.31	200	3.0	4.0	4.5	4.5	4.5
201 - 250	0.27 - 0.30	150	2.5	2.5	2.5	3.0	3.0
141 - 200	0.25 - 0.29	125	1.5	1.5	2.0	2.0	2.0
105 - 140	0.22 - 0.28	100	1.0	1.5	1.5	1.5	1.5
SPACE COOLING SYSTEMS (CHILLED WATER, HVAC CONDENSATE, REFRIGERANT AND BRINE)							
40 - 60	0.21 - 0.27	75	0.5	0.75	1.0	1.0	1.0
BELOW 40	0.20 - 0.26	50	1.0	1.5	1.5	1.5	1.5

PIPE MATERIAL SCHEDULE

SERVICES	APPLICATION	MATERIAL	REMARKS
STEAM CONDENSATE RETURN/ BOILER FEEDWATER	ALL SIZES	SCHEDULE 80 CARBON STEEL PIPE	JOINING METHOD OPTIONS INCLUDE WELDING, OR FLANGED. 3" THICK PRE-FORMED RIGID FIBERGLASS INSULATION COVER INSULATION WITH CORRUGATED ALUMINUM JACKET
HIGH PRESSURE STEAM	ALL SIZES	SCHEDULE 40 CARBON STEEL PIPE	JOINING METHOD OPTIONS INCLUDE WELDING, OR FLANGED. 3" THICK PRE-FORMED RIGID FIBERGLASS INSULATION COVER INSULATION WITH CORRUGATED ALUMINUM JACKET
MAKE UP WATER	ALL SIZES	STANDARD CARBON STEEL PIPE	JOINING METHOD OPTIONS INCLUDE WELDING, FLANGED OR MECHANICAL COUPLINGS.
TEMPORARY PIPING	ALL SIZES	SAME AS ABOVE OR APPROVED FLEXIBLE TEMPORARY HOSE	-

NOTES:
1. INSULATION CONDUCTIVITY PER CEC 2022 SHALL BE DETERMINED IN ACCORDANCE WITH ASTM C335 AT THE MEAN TEMPERATURE LISTED IN TABLE 120.3-A, AND SHALL BE ROUNDED TO THE NEAREST 1/100 BTU-INCH PER HOUR PER SQUARE FOOT PER °F. FLUID DISTRIBUTION SYSTEMS INCLUDE ALL ELEMENTS THAT ARE IN SERIES WITH THE FLUID FLOW, SUCH AS PIPES, PUMPS, VALVES, STRAINERS, COIL U-BENDS, AND AIR SEPARATORS, BUT NOT INCLUDING ELEMENTS THAT ARE NOT IN SERIES WITH THE FLUID FLOW, SUCH AS EXPANSION TANKS, FILL LINES, CHEMICAL FEEDERS, AND DRAINS.
2. PIPE INSULATION SHALL BE PROTECTED FROM DAMAGE, DUE TO SUNLIGHT, MOISTURE, EQUIPMENT MAINTENANCE, AND WIND. PROTECTION SHALL, AT MINIMUM, INCLUDE THE FOLLOWING:
   A. PIPE INSULATION EXPOSED TO WEATHER SHALL BE PROTECTED BY A COVER SUITABLE FOR OUTDOOR SERVICE. THE COVER SHALL BE WATER RETARDANT AND PROVIDE SHIELDING FROM SOLAR RADIATION THAT CAN CAUSE DEGRADATION OF THE MATERIAL. ADHESIVE TAPE SHALL NOT BE USED TO PROVIDE THIS PROTECTION.
   B. PIPE INSULATION COVERING CHILLED WATER PIPING AND REFRIGERANT SUCTION PIPING LOCATED OUTSIDE THE CONDITIONED SPACE SHALL INCLUDE, OR BE PROTECTED BY, A CLASS I OR CLASS II VAPOR RETARDER. ALL PENETRATIONS AND JOINTS SHALL BE SEALED.
   C. PIPE INSULATION BURIED BELOW GRADE MUST BE INSTALLED IN A WATER PROOF AND NON-CRUSHABLE CASING OR SLEEVE.
3. HYDRONIC PIPING INSTALLATION SHALL COMPLY WITH CHAPTER 12 PART I OF THE CMC 2022.

DEAERATOR/SURGE TANK AND PUMP SCHEDULE

TAG	STATUS	MAKE	MODEL	TYPE	LOCATION	SERVICE	CAPACITY		PUMPS											ELECTRICAL		PHYSICAL				ANCHORAGE DETAIL	COMMENTS
							SURGE TANK (GAL.)	DEAERATOR TANK (GAL.)	SURGE					BOILER FEED						V	PH	L	W	H	WEIGHT		
									QTY.	GPM	FT	RPM	HP	QTY.	GPM	FT	RPM	HP									
DA/ST 1	NEW	CLEAVER BROOKS	SD 70-1400-1800	COMBINATION DEAERATOR & SURGE TANK	CENTRAL PLANT	STEAM BOILERS	1800	1400	2	182	90	3500	20	4	79	438	3500	20	460	3	239"	99"	205"	32,900	3/S-500	
TEMP 1	TEMPORARY	CLEAVER BROOKS	SMP-45-900	DEAERATOR TANK	CENTRAL PLANT	STEAM BOILERS	-	900	-	-	-	-	-	2 2	63 81	438 438	3450 3450	15 15	460	3	133"	71"	177" 4	10,800	15/S-500 4	

NOT FOR BID

APPROVAL

REVIEWED IN ACCORDANCE WITH THE REQUIREMENTS OF T24, CCR
APPROVED
Department of Health Care Access & Information
Office of Statewide Hospital Planning & Development
6/9/2023, 7:23:46 AM
S230562-36-00
Allen Cheng

CLIENT

SAN BERNARDINO COUNTY

SAN BERNANDINO COUNTY
PROJECT AND FACILITIES MANAGEMENT DEPARTMENT

385 NORTH ARROWHEAD AVENUE, 3RD FLOOR
SAN BERNARDINO, CA 92415-0184

PROJECT NAME

ARMC DEAERATOR #1 REPLACEMENT

PROJECT NO.
WBSE # 10.10.0847
CIP # 20-011
HCAI # S230562-36-00

FACILITY NO.
17282

BUILDING NO.
BLD-00075 CENTRAL PLANT

400 N. PEPPER AVENUE
COLTON, CA 92324-1801

ENGINEER/ARCHITECT

IDS

IDS GROUP

1 PETERS CANYON ROAD, SUITE 130
IRVINE, CA 92606
TEL: 949-387-8500, FAX: 949-387-0800

STAMP

REGISTERED PROFESSIONAL ENGINEER
DARRYN B. SMITH
No. 30841
Exp. 12/31/24
MECHANICAL
STATE OF CALIFORNIA

STAMP

ISSUE

REV.	DESCRIPTION	DATE
	HCAI SUBMITTAL	04/28/23
A	BACK CHECK #1	06/16/23
B	BACK CHECK #2	07/28/23

PROJECT IDENTIFICATION

THIS DRAWING WAS CREATED IN AUTODESK AUTOCAD V. 2021 UNLESS OTHERWISE NOTED.

THE ORIGINAL SIZE OF THIS SHEET IS 30" X 42"

THESE DRAWINGS AND SPECIFICATIONS ARE THE PROPERTY AND COPYRIGHT OF IDS GROUP AND SHALL NOT BE USED ON ANY OTHER PROJECT OR LOCATIONS EXCEPT AS DESCRIBED ON THE DRAWINGS, WITHOUT THE WRITTEN AGREEMENT WITH IDS GROUP.

IDS PROJECT NO.	22X066.02
DRAWN BY	AZ
CHECKED BY	AZ
APPROVED BY	DS

SHEET TITLE

MECHANICAL NOTES LEGEND AND ABBREVIATIONS

SHEET NUMBER

M-001

SHEET NO. 001 OF 005

PLAN CHECK - NOT FOR CONSTRUCTION

IDS GROUP - FILE LOCATION: S:\PROJECTS\2022\SHARED\22X066.02 ARMC - REPLACEMENT DEAERATOR 1\05 CAD\04 MECH\22X06602_M001_NOTES PLOT DATE: 6/16/2023 3:24:36 PM USER: ANTHONY.ZANOTTI

GENERAL

1. PLANS ARE DIAGRAMMATIC. DO NOT SCALE FOR MATERIAL QUANTITIES. ALL SCALING SHOULD BE REFERENCED TO ARCHITECTURAL PLANS ONLY.

2. CONTRACTOR SHALL OBTAIN AND PAY FOR ALL REQUIRED FEES, PERMITS AND INSPECTIONS. OBTAIN ALL FIELD APPROVALS ON WORK FROM REGULATING AGENCIES WHERE REQUIRED.

3. COORDINATE ALL WORK WITH VARIOUS TRADES IN INSTALLING ALL WORK TO CLEAR ARCHITECTURAL AND STRUCTURAL MEMBERS. NO WORK SUCH AS PIPE, DUCT, ETC., TO BE IN CONTACT WITH ANY EQUIPMENT.

4. COORDINATE ALL CUTTING AND PATCHING WITH GENERAL CONTRACTOR AND OTHER DISCIPLINES. CONTRACTOR SHALL BE RESPONSIBLE FOR ALL CUTTING AND PATCHING RELATED TO HIS WORK.

5. RESTORE ALL DAMAGE RESULTING FORM YOUR WORK AND LEAVE PREMISES IN CLEAN CONDITION WHEN FINISHED WITH WORK.

6. FURNISH AND INSTALL ALL MATERIALS, EQUIPMENT AND LABOR AS SHOWN AND AS NECESSARY FOR COMPLETE WORKABLE SYSTEMS.

7. GUARANTEE ALL WORK AND MATERIALS FOR ONE YEAR (MINIMUM) FROM DATE OF FILING NOTICE OF COMPLETION.

8. PROVIDE FIVE BOUND COPIES OF EQUIPMENT SUBMITTALS PRIOR TO CONSTRUCTION FOR REVIEW AND APPROVAL. PROVIDE DIMENSIONALLY INSTALLATION DRAWINGS PLANS AND SECTIONS SHOWING ALL ARCHITECTURAL AND STRUCTURAL ELEMENTS, ALL EQUIPMENT, PIPING, ACCESSORIES, AND CLEARANCE FOR ACCESS, OPERATION AND SERVICING FOR ANY WORK THAT DEVIATES FROM DESIGN.

9. AT COMPLETION OF CONSTRUCTION PROVIDE AS-BUILT MARK-UPS AND THREE COPES OF BOUND OPERATIONS AND MAINTENANCE MANUALS.

DEMOLITION

1. SUMMARY
   a. REMOVING ABOVE-GRADE SITE IMPROVEMENTS WITHIN LIMITS INDICATED AS REQUIRED TO PERFORM TESTING BY OTHERS AND TO REPAIR DAMAGE LEFT BY TESTING OPERATIONS TO RESTORE BUILDING TO CONDITION SPECIFIED.
   b. DISCONNECTING, CAPPING, OR SEALING, AND ABANDONING SITE UTILITIES IN PLACE.
   c. DISCONNECTING, CAPPING, OR SEALING, AND REMOVING SITE UTILITIES.
   d. DISPOSING OF OBJECTIONABLE MATERIAL.

2. DEFINITIONS
   a. ANSI: AMERICAN NATIONAL STANDARDS INSTITUTE.
   b. CAL-OSHA: CALIFORNIA OCCUPATIONAL SAFETY AND HEALTH ADMINISTRATION.

3. PROJECT CONDITIONS
   a. EXCEPT FOR MATERIALS INDICATED TO BE STOCKPILED OR TO REMAIN THE OWNER'S PROPERTY, CLEARED MATERIALS ARE THE CONTRACTOR'S PROPERTY. REMOVE CLEARED MATERIALS FROM SITE AND DISPOSE OF IN LAWFUL MANNER.
   b. SALVABLE IMPROVEMENTS: CAREFULLY REMOVE ITEMS INDICATED TO BE SALVAGED AND STORE WHERE INDICATED ON PLANS OR WHERE DESIGNATED BY THE OWNER. AVOID DAMAGING MATERIALS DESIGNATED FOR SALVAGE.
   c. UNIDENTIFIED MATERIALS: IF UNIDENTIFIED MATERIALS ARE DISCOVERED, INCLUDING HAZARDOUS MATERIALS THAT WILL REQUIRE ADDITIONAL REMOVAL OTHER THAN IS REQUIRED BY THE CONTRACT DOCUMENTS, IMMEDIATELY REPORT THE DISCOVERY TO THE OWNER. IF NECESSARY, THE OWNER WILL ARRANGE FOR ANY TESTING OR ANALYSIS OF THE DISCOVERED MATERIALS AND WILL PROVIDE INSTRUCTIONS REGARDING THE REMOVAL AND DISPOSAL OF THE UNIDENTIFIED MATERIALS.
   d. FOR ANY UTILITY LINES WHICH ARE TO BE PARTIALLY DEMOLISHED, THE CONTRACTOR SHALL PROVIDE NEW OPERABLE SERVICE RE-CONNECTION ALL THE WAY TO THE EXTENT OF THE UTILITY SOURCE IF NEEDED TO MAINTAIN SERVICE. THIS INCLUDES THE LOWERED OF ANY UTILITIES LINES TO ACHIEVE MINIMUM COVER REQUIREMENTS.

EXECUTION

1. INSTALLATION
   a. ALL EQUIPMENT, UNLESS OTHERWISE SHOWN OR NOTED ON THE DRAWINGS, IS TO BE INSTALLED IN ACCORDANCE WITH INDUSTRY STANDARDS AND MANUFACTURER'S RECOMMENDED INSTALLATION INSTRUCTIONS.
   b. FLUSH AND CLEAN EQUIPMENT, IN ACCORDANCE WITH MANUFACTURER'S START-UP INSTRUCTIONS, AND IN PRESENCE OF MANUFACTURER'S REPRESENTATIVE. TEST CONTROLS AND DEMONSTRATE COMPLIANCE WITH REQUIREMENTS. REPLACE DAMAGE OR MALFUNCTIONING CONTROLS.

2. FLUSH AND CLEAN WATER PIPING SYSTEMS
   a. THE WATER TREATMENT CONTRACTOR SHALL BE RESPONSIBLE FOR FURNISHING THE CLEANING MATERIAL AND SUPERVISING THE CHEMICAL CLEANING OF THE CHILLED WATER PIPING AND CONDENSER WATER PIPING.
   b. THE SYSTEM TO BE CLEANED SHALL BE FILLED WITH A SOLUTION OF 10% BY WEIGHT OF A HEAVY DUTY ALKALINE LIQUID CLEANER. THE CLEANER SHALL BE CAPABLE OF WETTING AND PENETRATING HEAVY SOIL DEPOSITS OF OIL OR GREASE, AND KEEPING THESE PRODUCTS IN SUSPENSION, FOR REMOVAL THROUGH FLUSHING THE SYSTEM TO DRAIN.
   c. THE CLEANING SOLUTION SHALL BE CIRCULATED FOR A MINIMUM OF 8 HOURS. AT THE END OF THE 8 HOURS, THE SYSTEM SHALL BE FLUSHED TO DRAIN, AND THEN REFILLED WITH FRESH WATER, TAKING CARE TO REMOVE ANY ENTRAPPED AIR FROM THE SYSTEM.
   d. AT THE END OF THE CLEANING PERIOD, THE SYSTEM SHALL BE CHEMICALLY TREATED AS SPECIFIED. IN NO CASE SHALL THE SYSTEM BEING CLEANED BE LEFT IN AN UNTREATED CONDITION FOR MORE THAN 8 HOURS.
   e. AT THE CONCLUSION OF THE CLEANING OPERATION, THE WATER TREATMENT CONTRACTOR SHALL CERTIFY IN WRITING THAT THE SYSTEM WAS CLEANED AS SPECIFIED.

3. MANUFACTURER'S START-UP SERVICES: THE MANUFACTURER SHALL PROVIDE START-UP SERVICE IN THE FORM OF A FACTORY TRAINED SERVICE TECHNICIAN. THE SERVICE TECHNICIAN SHALL VERIFY CORRECT INSTALLATION, VERIFY EQUIPMENT MOUNTING AND INSTALLATION, VERIFY PIPING INSTALLATION, VERIFY CONTROL WIRING, VERIFY POWER WIRING, AND CHECK FOR PROPER OPERATION. THE SERVICE TECHNICIAN SHALL PROVIDE FINAL ADJUSTMENTS TO MEET THE SPECIFIED PERFORMANCE REQUIREMENTS. FULLY STAFFED PARTS AND SERVICE PERSONNEL SHALL BE WITHIN 4 HOURS TRAVEL FROM THE JOB SITE.

4. RESTORATION
   a. RESTORE DAMAGED IMPROVEMENTS TO THEIR ORIGINAL CONDITION, AS ACCEPTABLE TO THE OWNER.

5. UTILITIES
   a. LOCATE, IDENTIFY, DISCONNECT, AND SEAL OR CAP OFF UTILITIES INDICATED TO BE REMOVED OR ABANDONED. ANY PIPES TO BE ABANDONED SHALL BE FILLED WITH A CEMENT SLURRY.
   b. ARRANGE TO SHUT OFF INDICATED UTILITIES WITH UTILITY COMPANIES OR VERIFY THAT UTILITIES HAVE BEEN SHUT OFF.
   c. EXISTING UTILITIES: DO NOT INTERRUPT UTILITIES SERVING FACILITIES OCCUPIED BY OWNER OR OTHERS UNLESS AUTHORIZED IN WRITING BY THE OWNER, AND THEN ONLY AFTER ARRANGING TO PROVIDE TEMPORARY UTILITY SERVICES ACCORDING TO REQUIREMENTS INDICATED.
   d. COORDINATE UTILITY INTERRUPTIONS WITH UTILITY COMPANY AFFECTED.
   e. DO NOT PROCEED WITH UTILITY INTERRUPTIONS WITHOUT THE PERMISSION OF THE OWNER AND UTILITY COMPANY AFFECTED. NOTIFY OWNER AND UTILITY COMPANY AFFECTED TWO WORKING DAYS PRIOR TO UTILITY INTERRUPTIONS.

6. DISPOSAL
   a. REMOVE SURPLUS OBSTRUCTIONS, DEMOLISHED MATERIALS, AND WASTE MATERIALS, INCLUDING TRASH AND DEBRIS, AND LEGALLY DISPOSE OF THEM OFF THE OWNER'S PROPERTY. REFER TO SECTION 01 74 19 CONSTRUCTION WASTE MANAGEMENT AND DISPOSAL.

STEAM/CONDENSATE SPECIALTIES

1. STRAINERS
   a. Y-PATTERN STRAINERS, STAINLESS STEEL:
      1. BODY: ASTM A351 STAINLESS STEEL, WITH BOLTED COVER AND BOTTOM DRAIN CONNECTION.
      2. END CONNECTIONS: THREADED FOR STRAINERS NPS 2 AND SMALLER; FLANGED ENDS FOR STRAINERS NPS 2-1/2 AND LARGER.
      3. STRAINER SCREEN: 1/32 INCH PERFORATIONS IN MESH STAINLESS STEEL STRAINER SCREEN.
      4. TAPPED BLOWOFF PLUG.
      5. RATING: CLASS 600 FOR THREADED; CLASS 150 FOR FLANGED.

2. STOP-CHECK VALVES
   a. STOP-CHECK VALVES:
      1. BODY AND BONNET: CAST IRON.
      2. END CONNECTIONS: FLANGED.
      3. DISC: CYLINDRICAL WITH REMOVABLE LINER AND MACHINED SEAT.
      4. STEM: BRASS ALLOY.
      5. OPERATOR: OUTSIDE SCREW AND YOKE WITH CAST-IRON HANDWHEEL.
      6. PACKING: PTFE-IMPREGNATED PACKING WITH TWO-PIECE PACKING GLAND ASSEMBLY.
      7. PRESSURE CLASS: 250.

3. STEAM SAFETY VALVES
   a. BRONZE STEAM SAFETY VALVES: ASME LABELED.
      1. DISC MATERIAL: FORGED COPPER ALLOY.
      2. END CONNECTIONS: THREADED INLET AND OUTLET.
      3. SPRING: FULLY ENCLOSED STEEL SPRING WITH ADJUSTABLE PRESSURE RANGE AND POSITIVE SHUTOFF; FACTORY SET AND SEALED.
      4. PRESSURE CLASS: 250.
      5. DRIP-PAN ELBOW: CAST IRON AND HAVING THREADED INLET AND OUTLET, WITH THREADS COMPLYING WITH ASME B1.20.1.
      6. SIZE AND CAPACITY: AS REQUIRED FOR EQUIPMENT ACCORDING TO ASME BOILER AND PRESSURE VESSEL CODE.
   b. CAST-IRON STEAM SAFETY VALVES: ASME LABELED.
      1. DISC MATERIAL: FORGED COPPER ALLOY WITH BRONZE NOZZLE.
      2. END CONNECTIONS: RAISED-FACE FLANGED INLET AND THREADED OR FLANGED OUTLET CONNECTIONS.
      3. SPRING: FULLY ENCLOSED CADMIUM-PLATED STEEL SPRING WITH ADJUSTABLE PRESSURE RANGE AND POSITIVE SHUTOFF, FACTORY SET AND SEALED.
      4. PRESSURE CLASS: 250.
      5. DRIP-PAN ELBOW: CAST IRON AND HAVING THREADED INLET, OUTLET, AND DRAIN, WITH THREADS COMPLYING WITH ASME B1.20.1.
      6. EXHAUST HEAD: CAST IRON AND HAVING THREADED INLET AND DRAIN, WITH THREADS COMPLYING WITH ASME B1.20.1.
      7. SIZE AND CAPACITY: AS REQUIRED FOR EQUIPMENT ACCORDING TO ASME BOILER AND PRESSURE VESSEL CODE.

4. STEAM TRAPS
   a. FLOAT AND THERMOSTATIC STEAM TRAPS, CAST IRON:
      1. BODY AND BOLTED CAP: ASTM A126 CAST IRON.
      2. END CONNECTIONS: THREADED.
      3. FLOAT MECHANISM: REPLACEABLE, STAINLESS STEEL.
      4. SEAT: HARDENED STAINLESS STEEL.
      5. TRAP TYPE: BALANCED PRESSURE.
      6. THERMOSTATIC BELLOWS: STAINLESS STEEL OR MONEL.
      7. THERMOSTATIC AIR VENT CAPABLE OF WITHSTANDING 45 DEG F OF SUPERHEAT AND RESISTING WATER HAMMER WITHOUT SUSTAINING DAMAGE.
      8. VACUUM BREAKER: THERMOSTATIC WITH PHOSPHOR BRONZE BELLOWS, AND STAINLESS STEEL CAGE, VALVE, AND SEAT.
      9. MAXIMUM OPERATING PRESSURE: 125 PSIG.
   b. INVERTED BUCKET STEAM TRAPS, CAST IRON:
      1. BODY AND CAP: CAST IRON.
      2. END CONNECTIONS: THREADED.
      3. HEAD AND SEAT: STAINLESS STEEL.
      4. VALVE RETAINER, LEVER, AND GUIDE PIN ASSEMBLY: STAINLESS STEEL.
      5. BUCKET: BRASS OR STAINLESS STEEL.
      6. STRAINER: INTEGRAL STAINLESS STEEL INLET STRAINER WITHIN THE TRAP BODY.
      7. AIR VENT: STAINLESS STEEL THERMOSTATIC VENT.
      8. PRESSURE RATING: 250 PSIG.

5. THERMOSTATIC AIR VENTS AND VACUUM BREAKERS
   a. VACUUM BREAKERS:
      1. BODY: STAINLESS STEEL.
      2. END CONNECTIONS: THREADED.
      3. SEALING BALL, RETAINER, SPRING, AND SCREEN: STAINLESS STEEL.
      4. O-RING SEAL: ETHYLENE PROPYLENE RUBBER.
      5. PRESSURE RATING: 125 PSIG.
      6. MAXIMUM TEMPERATURE RATING: 350 DEG F.

6. FLEXIBLE CONNECTORS
   a. STAINLESS STEEL BELLOWS, FLEXIBLE CONNECTORS:
      1. BODY: STAINLESS STEEL BELLOWS WITH WOVEN, FLEXIBLE, BRONZE WIRE-REINFORCED, PROTECTIVE JACKET.
      2. END CONNECTIONS: THREADED OR FLANGED TO MATCH EQUIPMENT CONNECTED.
      3. PERFORMANCE: CAPABLE OF 3/4-INCH MISALIGNMENT.
      4. CWP RATING: 150 PSIG.
      5. MAXIMUM OPERATING TEMPERATURE: 250 DEG F.

SLEEVES:

1. THE CONTRACTOR SHALL PROVIDE SLEEVES TO PROTECT EQUIPMENT OR FACILITIES IN THE INSTALLATION. EACH SLEEVE SHALL EXTEND THROUGH IT'S RESPECTIVE FLOOR, WALL OR PARTITION AND SHALL BE CUT FLUSH WITH EACH SURFACE EXCEPT SLEEVES THAT PENETRATE THE FLOOR, WHICH SHALL EXTEND 2" ABOVE THE FLOOR.

2. ALL SLEEVES AND OPENINGS THROUGH FIRE RATED WALLS AND/OR FLOORS SHALL BE FIRE SEALED WITH CALCIUM SILICATE, SILICONE "RTV" FOAM, "3M" FIRE RATED SEALANTS OR EQUAL, SO AS TO RETAIN THE FIRE RATING OF THE FLOOR OR WALL. CONFORM TO U.L. ASSEMBLY RATING OF FLOOR OR WALL.

3. SLEEVES IN BEARING AND MASONRY WALLS, FLOORS, AND PARTITIONS SHALL BE STANDARD WEIGHT STEEL PIPE FINISHED WITH SMOOTH EDGES. FOR OTHER THAN MASONRY PARTITIONS, THROUGH SUSPENDED CEILINGS, OR FOR CONCEALED VERTICAL PIPING, SLEEVES SHALL BE NO. 22 U.S.G. GALVANIZED STEEL MINIMUM.

4. DUCT SLEEVES TO BE MINIMUM 14 GAUGE STEEL.

HANGERS:

1. HANGERS SHALL INCLUDE ALL MISCELLANEOUS STEEL SUCH AS ANGLE IRON, BANDS, C-CLAMPS WITH RETAINING CLIPS, CHANNELS, HANGER RODS, ETC., NECESSARY FOR THE INSTALLATION OF WORK.
2. HANGERS SHALL BE FASTENED TO BUILDING STEEL, CONCRETE, OR MASONRY, BUT NOT TO PIPING OR DUCTWORK. HANGING FROM METAL DECK IS NOT PERMITTED. HANGERS MUST BE ATTACHED TO UPPER CHORD OF BAR JOIST. WHERE INTERFERENCES OCCUR, IN ORDER TO SUPPORT DUCTWORK OR PIPING, THE CONTRACTOR MUST INSTALL TRAPEZE TYPE HANGERS OR SUPPORTS WHICH SHALL BE LOCATED WHERE THEY DO NOT INTERFERE WITH ACCESS TO FIRE DAMPERS, VALVES, ACCESS DOORS AND OTHER EQUIPMENT SERVICE REQUIREMENTS AND/OR OTHER TRADES. HANGER TYPES AND INSTALLATION METHODS ARE SUBJECT TO LANDLORD CRITERIA.

3. HANGERS FOR ALL INSULATED PIPING SHALL BE SIZED AND INSTALLED FOR THE OUTER DIAMETER OF INSULATION. INSTALL 6" LONG SPLIT CIRCLE GALVANIZED SADDLE BETWEEN THE HANGER AND THE PIPE INSULATION.

4. HANGERS AND PIPING OF DISSIMILAR METALS SHALL BE DI-ELECTRICALLY SEPARATED FROM ONE ANOTHER.

SEISMIC RESTRAINT REQUIREMENTS

1. BRACE MECHANICAL SYSTEMS AND ITEMS OF EQUIPMENT TO WITHSTAND LATERAL AND VERTICAL FORCES THAT RESULT FROM EARTHQUAKES.

2. PROVIDE COMPLETE SEISMIC ANCHORAGE AND BRACING FOR ALL SUSPENDED MECHANICAL EQUIPMENT TO RESIST A HORIZONTAL FORCE ACTING IN ANY DIRECTION.

3. PROVIDE RESTRAINTS WITH BRACING FOR PIPES. THE DESIGN AND INSTALLATION OF PIPING RESTRAINING DEVICES FOR LATERAL AND VERTICAL FORCES SHALL BE IN ACCORDANCE WITH OPM-0043

SYSTEM TESTING, ADJUSTING, AND BALANCING

1. PRIOR TO REMOVING EXISTING CHILLER PERFORM A PRE-FUNCTIONAL TEST , COMMISSIONING AND TREND LOG ANALYSIS.

2. COMMISSIONING SPEC TO BE PROVIDED BY THE COMMISSIONING AGENT.

3. TESTING, ADJUSTING AND BALANCING OF ALL WORK SHALL BE MADE BY AN INDEPENDENT CONTRACTOR WHO IS CURRENTLY LICENSED ASSOCIATED AIR BALANCING COUNCIL (AABC) OR NATIONAL ENVIRONMENTAL BALANCING BUREAU (NEBB) BALANCING CONTRACTOR. NO OTHER BALANCE REPORTS WILL BE REVIEWED OR ACCEPTED. ALL BALANCING WORK MUST BE COMPLETE AND DONE IN ACCORDANCE WITH THE MOST RECENT STANDARDS OF THEIR SOCIETY. PAYMENT OF ALL COSTS FOR TESTING SHALL BE MADE BY THE HVAC CONTRACTOR.

4. BALANCE WATER QUANTITIES TO WITHIN + 5% OF THAT INDICATED ON THE DRAWINGS.

5. THE BALANCE REPORT SHALL INCLUDE AS A MINIMUM THE FOLLOWING INFORMATION:
   a. AABC OR NEBB CERTIFICATION NUMBER AND SIGNATURE OF BALANCING CONTRACTOR.
   b. INSTRUMENTATION LIST WITH LAST CALIBRATION DATES.
   c. MAKE AND MODEL NUMBERS OF ALL HVAC EQUIPMENT TESTED.
   d. MOTOR NAMEPLATE DATA WITH ACTUAL FIELD VOLTAGE AND AMPERAGE READINGS FOR EACH LEG.
   e. MOTOR RPMS.
   f. WATER BALANCE DATA INCLUDING GPM WITH INLET AND OUTLET TEMPERATURE AND PRESSURE READINGS (WHERE APPLICABLE)

5. ALL CONTROL SEQUENCES SHALL BE TESTED, INTERLOCKED EQUIPMENT, AND OPERATING STATUS RECORDED IN THE REPORT.

6. THREE COPIES OF THE BALANCE REPORT SHALL BE SUBMITTED THROUGH THE GENERAL CONTRACTOR TO THE TENANT'S CONSTRUCTION MANAGER FOR APPROVAL.

7. THE BALANCING CONTRACTOR SHALL PERFORM ALL APPLICABLE TESTING AND BALANCING FUNCTIONS REQUIRED FOR THE SYSTEM DESIGNED IN THESE DRAWINGS. THE BALANCING CONTRACTOR SHALL RECHECK ANY ITEMS THAT THE TENANT DEEMS NECESSARY AT NO ADDITIONAL COST TO THE TENANT.

8. FINAL BALANCE REPORT SHALL BE INCLUDED IN THE OPERATION & MAINTENANCE MANUALS.

FINAL HVAC INSPECTIONS

1. ASIDE FROM NORMAL INTERIM INSPECTIONS OF WORK IN PLACE, THE TENANT SHALL HAVE THE RIGHT TO AN INDEPENDENT HVAC CONTRACTOR INSPECT THE FINISHED HVAC INSTALLATION UPON COMPLETION FOR COMPLIANCE WITH THE PLANS, SPECIFICATIONS, AND CODES. THE INSTALLING CONTRACTOR WILL BE RESPONSIBLE TO BRING ALL ITEMS REPORTED BY THE INDEPENDENT HVAC CONTRACTOR UP TO PLANS AND SPECIFICATION REQUIREMENTS AT NO COST TO TENANT.

NOT FOR BID

APPROVAL

REVIEWED IN ACCORDANCE WITH THE REQUIREMENTS OF T24, CCR
APPROVED
Department of Health Care Access & Information
Office of Statewide Hospital Planning & Development
8/9/2023, 7:23:46 AM
S230562-36-00
Allen Cheng

CLIENT

SAN BERNANDINO COUNTY
PROJECT AND FACILITIES MANAGEMENT DEPARTMENT

385 NORTH ARROWHEAD AVENUE, 3RD FLOOR
SAN BERNARDINO, CA 92415-0184

PROJECT NAME

ARMC DEAERATOR #1 REPLACEMENT

PROJECT NO.
WBSE # 10.10.0847
CIP # 20-011
HCAi # S230562-36-00

FACILITY NO.
17282

BUILDING NO.
BLD-00075 CENTRAL PLANT

400 N. PEPPER AVENUE
COLTON, CA 92324-1801

ENGINEER/ARCHITECT

IDS GROUP

1 PETERS CANYON ROAD, SUITE 130
IRVINE, CA. 92606
TEL: 949-387-8500, FAX: 949-387-0800

STAMP

REGISTERED PROFESSIONAL ENGINEER
DARREN B. SMITH
No. 30841
Exp. 12/31/24
MECHANICAL
STATE OF CALIFORNIA

STAMP

ISSUE

REV.	DESCRIPTION	DATE
	HCAi SUBMITTAL	04/28/23
A	BACK CHECK #1	06/16/23
B	BACK CHECK #2	07/28/23

PROJECT IDENTIFICATION

THIS DRAWING WAS CREATED IN AUTODESK AUTOCAD V. 2021 UNLESS OTHERWISE NOTED.

THE ORIGINAL SIZE OF THIS SHEET IS 30" X 42"

THESE DRAWINGS AND SPECIFICATIONS ARE THE PROPERTY AND COPYRIGHT OF IDS GROUP AND SHALL NOT BE USED ON ANY OTHER PROJECT OR LOCATIONS EXCEPT AS DESCRIBED ON THE DRAWINGS, WITHOUT THE WRITTEN AGREEMENT WITH IDS GROUP.

IDS PROJECT NO.	22X066.02
DRAWN BY	AZ
CHECKED BY	AS
APPROVED BY	DS

SHEET TITLE

MECHANICAL SPECIFICATIONS

SHEET NUMBER

M-002

SHEET NO. 002 OF 006

PLAN CHECK - NOT FOR CONSTRUCTION

IDS GROUP - FILE LOCATION: S:\PROJECTS\2022\SHARED\22X066.02 ARMC - REPLACEMENT DEAERATOR 1\05 CAD\04 MECH\22X066\02_M001_NOTES PLOT DATE: 6/16/2023 3:24:37 PM USER: ANTHONY.ZANOTTI

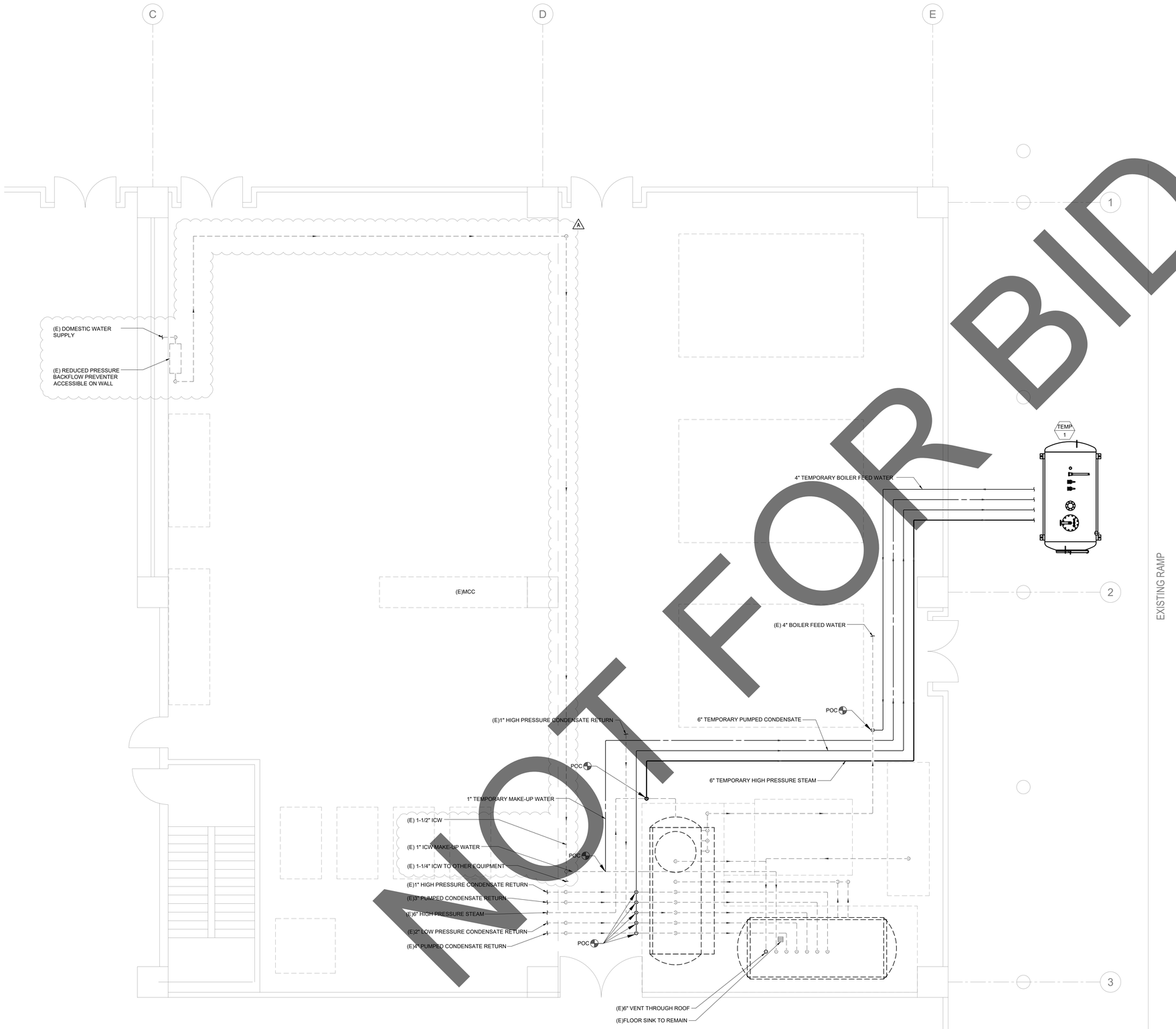

NOT FOR BID

MECHANICAL FLOOR PLAN - TEMPORARY WORK | 1/4" = 1'-0" | 1

GENERAL NOTES

1. THE TEMPORARY EQUIPMENT WILL ONLY BE IN OPERATION DURING REPLACEMENT OF EQUIPMENT, AND SHALL NOT EXCEED 180 DAYS.

APPROVAL

REVIEWED IN ACCORDANCE WITH THE REQUIREMENTS OF T24, CCR
APPROVED
Department of Health Care Access & Information
Office of Statewide Hospital Planning & Development
6/9/2023, 7:23:46 AM
S230562-36-00
Allen Cheng

CLIENT

SAN BERNARDINO COUNTY

SAN BERNANDINO COUNTY
PROJECT AND FACILITIES
MANAGEMENT DEPARTMENT

385 NORTH ARROWHEAD AVENUE, 3RD FLOOR
SAN BERNARDINO, CA 92415-0184

PROJECT NAME

ARMC DEAERATOR #1 REPLACEMENT

PROJECT NO.
WBSE # 10.10.0847
CIP # 20-011
HCAi # S230562-36-00

FACILITY NO.
17282

BUILDING NO.
BLD-00075 CENTRAL PLANT

400 N. PEPPER AVENUE
COLTON, CA 92324-1801

ENGINEER/ARCHITECT

IDS

IDS GROUP

1 PETERS CANYON ROAD, SUITE 130
IRVINE, CA. 92606
TEL: 949-387-8500, FAX: 949-387-0800

STAMP

REGISTERED PROFESSIONAL ENGINEER
DARREN B. SMITH
No. 30841
Exp. 12/31/24
MECHANICAL
STATE OF CALIFORNIA

STAMP

ISSUE

REV.	DESCRIPTION	DATE
	HCAi SUBMITTAL	04/28/23
A	BACK CHECK #1	06/16/23
B	BACK CHECK #2	07/28/23

PROJECT IDENTIFICATION

THIS DRAWING WAS CREATED IN AUTODESK AUTOCAD V. 2021 UNLESS OTHERWISE NOTED.

THE ORIGINAL SIZE OF THIS SHEET IS 30" X 42"

THESE DRAWINGS AND SPECIFICATIONS ARE THE PROPERTY AND COPYRIGHT OF IDS GROUP AND SHALL NOT BE USED ON ANY OTHER PROJECT OR LOCATIONS EXCEPT AS DESCRIBED ON THE DRAWINGS, WITHOUT THE WRITTEN AGREEMENT WITH IDS GROUP.

IDS PROJECT NO.	22X066.02
DRAWN BY	
CHECKED BY	
APPROVED BY	

SHEET TITLE

MECHANICAL FLOOR PLAN TEMPORARY WORK

SHEET NUMBER

M-101

SHEET NO. 003 OF 006

PLAN CHECK - NOT FOR CONSTRUCTION

IDS GROUP - FILE LOCATION: S:\PROJECTS\2022\SHARED\22X066.02 ARMC - REPLACEMENT DEAERATOR 1\05 CAD\04 MECH\22X06602_M102_TEMP PLOT DATE: 6/16/2023 3:24:48 PM USER: ANTHONY.ZANOTTI

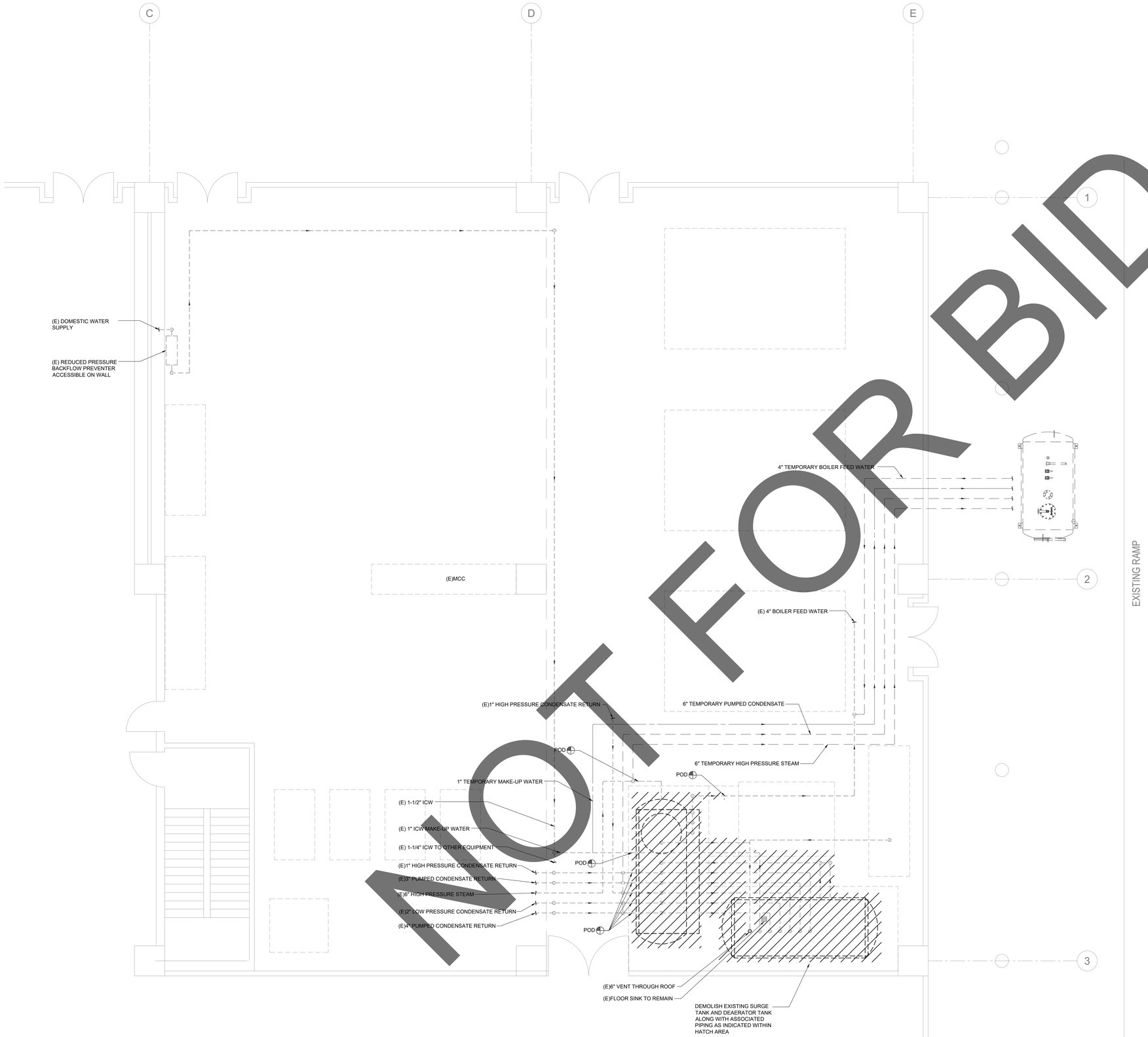

NOT FOR BID

MECHANICAL FLOOR PLAN - DEMOLITION | 1/4" = 1'-0" | 1

DEMOLITION KEYNOTES

APPROVAL

REVIEWED IN ACCORDANCE WITH THE REQUIREMENTS OF T24, CCR
APPROVED
Department of Health Care Access & Information
Office of Statewide Hospital Planning & Development
6/9/2023, 7:23:46 AM
S230562-36-00
Allen Cheng

CLIENT

SAN BERNARDINO COUNTY

SAN BERNANDINO COUNTY
PROJECT AND FACILITIES
MANAGEMENT DEPARTMENT

385 NORTH ARROWHEAD AVENUE, 3RD FLOOR
SAN BERNARDINO, CA 92415-0184

PROJECT NAME

ARMC DEAERATOR #1 REPLACEMENT

PROJECT NO.
WBSE # 10.10.0847
CIP # 20-011
HCAi # S230562-36-00

FACILITY NO.
17282

BUILDING NO.
BLD-00075 CENTRAL PLANT

400 N. PEPPER AVENUE
COLTON, CA 92324-1801

ENGINEER/ARCHITECT

IDS

IDS GROUP

1 PETERS CANYON ROAD, SUITE 130
IRVINE, CA 92606
TEL: 949-387-8500, FAX: 949-387-0800

STAMP

REGISTERED PROFESSIONAL ENGINEER
DARREN B. DAVIS
No. 30841
Exp. 12/31/24
MECHANICAL
STATE OF CALIFORNIA

STAMP

ISSUE

REV.	DESCRIPTION	DATE
	HCAi SUBMITTAL	04/28/23
A	BACK CHECK #1	06/16/23
B	BACK CHECK #2	07/28/23

PROJECT IDENTIFICATION

THIS DRAWING WAS CREATED IN AUTODESK AUTOCAD V. 2021 UNLESS OTHERWISE NOTED.

THE ORIGINAL SIZE OF THIS SHEET IS 30" X 42"

THESE DRAWINGS AND SPECIFICATIONS ARE THE PROPERTY AND COPYRIGHT OF IDS GROUP AND SHALL NOT BE USED ON ANY OTHER PROJECT OR LOCATIONS EXCEPT AS DESCRIBED ON THE DRAWINGS, WITHOUT THE WRITTEN AGREEMENT WITH IDS GROUP.

IDS PROJECT NO.	22X066.02
DRAWN BY	AZ
CHECKED BY	AZ
APPROVED BY	DS

SHEET TITLE

MECHANICAL FLOOR PLAN DEMOLITION

SHEET NUMBER

M-102

SHEET NO. 004 OF 006

PLAN CHECK - NOT FOR CONSTRUCTION

IDS GROUP - FILE LOCATION: S:\PROJECTS\2022\SHARED\22X066.02 ARMC - REPLACEMENT DEAERATOR 1\05 CAD\04 MECH\22X06602_M101_DEMO PLOT DATE: 6/16/2023 3:24:57 PM USER: SUHAIL.SHAHZAD

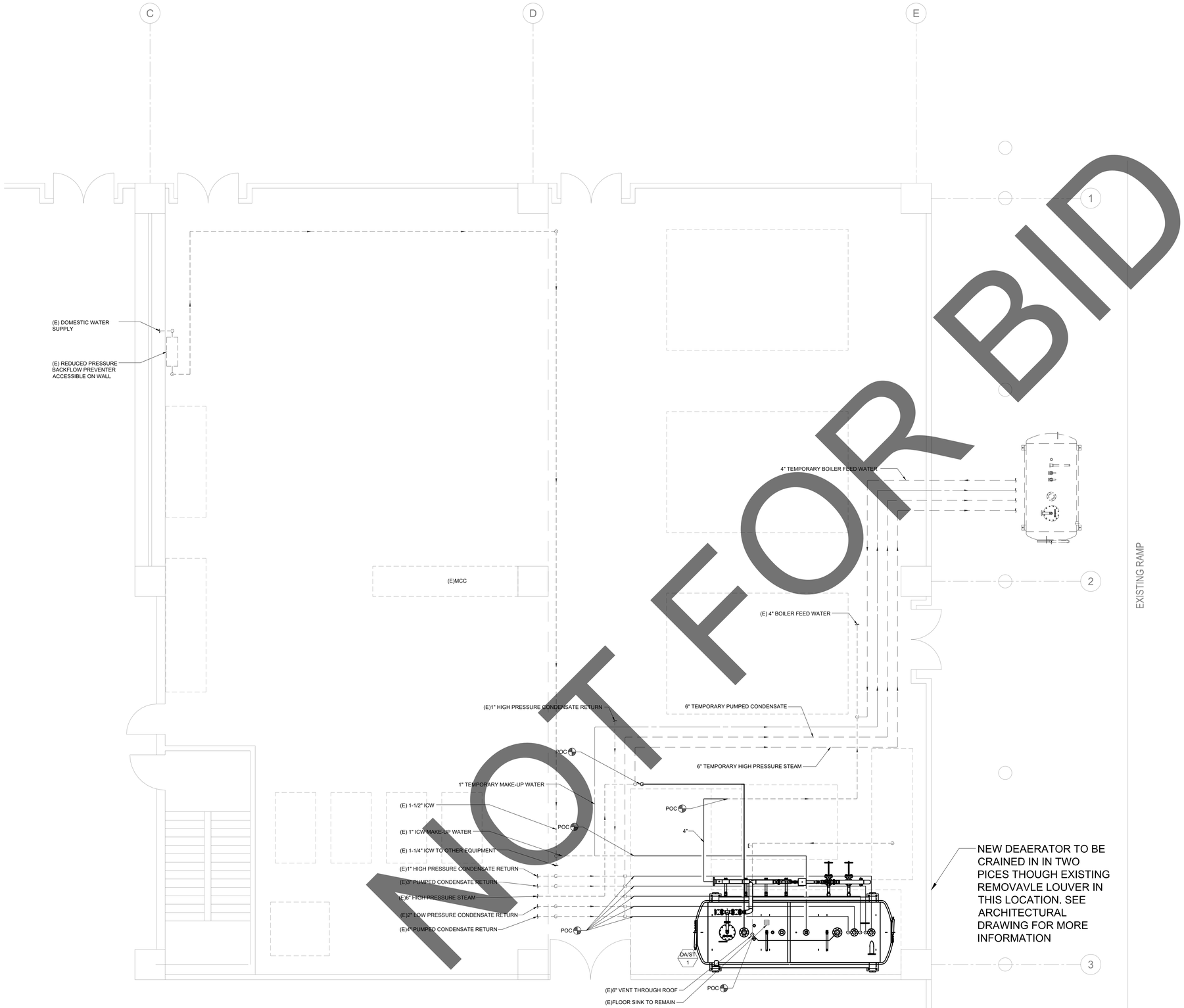

NOT FOR BID

GENERAL NOTES

1. All TEMPORARY EQUIPMENT, PIPING, AND SUPPORTS ARE TO BE REMOVED ONCE THE NEW DEAERATOR SYSTEM IS OPERATING.

MECHANICAL FLOOR PLAN | 1/4" = 1'-0" | 1

APPROVAL

REVIEWED IN ACCORDANCE WITH THE REQUIREMENTS OF T24, CCR
APPROVED
Department of Health Care Access & Information
Office of Statewide Hospital Planning & Development
6/9/2023, 7:23:46 AM
S230562-36-00
Allen Cheng

CLIENT

SAN BERNARDINO COUNTY

SAN BERNANDINO COUNTY
PROJECT AND FACILITIES
MANAGEMENT DEPARTMENT

385 NORTH ARROWHEAD AVENUE, 3RD FLOOR
SAN BERNARDINO, CA 92415-0184

PROJECT NAME

ARMC DEAERATOR #1 REPLACEMENT

PROJECT NO.
WBSE # 10.10.0847
CIP # 20-011
HCAi # S230562-36-00

FACILITY NO.
17282

BUILDING NO.
BLD-00075 CENTRAL PLANT

400 N. PEPPER AVENUE
COLTON, CA 92324-1801

ENGINEER/ARCHITECT

IDS

IDS GROUP

1 PETERS CANYON ROAD, SUITE 130
IRVINE, CA 92606
TEL: 949-387-8500, FAX: 949-387-0800

STAMP

REGISTERED PROFESSIONAL ENGINEER
DARREN B. SMITH
No. 30841
Exp. 12/31/24
MECHANICAL
STATE OF CALIFORNIA

STAMP

ISSUE

REV.	DESCRIPTION	DATE
	HCAi SUBMITTAL	04/28/23
A	BACK CHECK #1	06/16/23
B	BACK CHECK #2	07/28/23

PROJECT IDENTIFICATION

THIS DRAWING WAS CREATED IN AUTODESK AUTOCAD V. 2021 UNLESS OTHERWISE NOTED.

THE ORIGINAL SIZE OF THIS SHEET IS 30" X 42"

THESE DRAWINGS AND SPECIFICATIONS ARE THE PROPERTY AND COPYRIGHT OF IDS GROUP AND SHALL NOT BE USED ON ANY OTHER PROJECT OR LOCATIONS EXCEPT AS DESCRIBED ON THE DRAWINGS, WITHOUT THE WRITTEN AGREEMENT WITH IDS GROUP.

IDS PROJECT NO.	22X066.02
DRAWN BY	AZ
CHECKED BY	AZ
APPROVED BY	DS

SHEET TITLE

MECHANICAL FLOOR PLAN

SHEET NUMBER

M-201

SHEET NO. 005 OF 006

PLAN CHECK - NOT FOR CONSTRUCTION

IDS GROUP - FILE LOCATION: S:\PROJECTS\2022\SHARED\22X066.02 ARMC - REPLACEMENT DEAERATOR 1\05 CAD\04 MECH\22X06602_M201_NEW PLOT DATE: 6/16/2023 3:25:08 PM USER: SUHAIL.SHAHZAD

IDS GROUP - FILE LOCATION: S:\PROJECTS\2022\SHARED\22X066.02 ARMC - REPLACEMENT DEAERATOR 1\05 CAD\04 MECH\22X06602_M501_DETAIL PLOT DATE: 6/16/2023 3:25:20 PM USER: SUHAIL.SHAHZAD

NOT FOR BID

TEMPORARY UNIT DIMENSIONS — NO SCALE — 5

7 | 6 | 5 | 4 | 3 | 2 | 1

MAJOR COMPONENTS

(* = SHIPPED LOOSE)

ITEM	MAJOR COMPONENTS
1	TANK, SM 45, 900 GALLON
2	STAND, 8' HIGH
3	SPRAY NOZZLE, 45,000 LBS/HR, 90 GPM, 50 PSI, WITH SEPCO 200 GASKET
4	PUMP (2), GRUNDFOS CR20-7K, CAPACITY 81 GPM, TDH 438', NPSHR 5.5', 2" NPT
5	MOTOR (2), 15 HP @ 3450 RPM, TEFC, NEMA PREMIUM
6	SUCTION PIPING (2), 3" FLG, CLASS 150, INC. FLEX COUPLING, GATE AND CHECK VALVES
7	NOT USED
8	RECIRCULATION PIPING (2), 1-1/4" NPT, CLASS 300, INC. RECIRC ORIFICE AND BALL VALVES
9	PUMP (2), GRUNDFOS CR15-7K, CAPACITY 63 GPM, TDH 438', NPSHR 3.7', 2" NPT
10	MOTOR (2), 15 HP @ 3450 RPM, TEFC, NEMA PREMIUM
11	SUCTION PIPING (2), 2-1/2" NPT, CLASS 300, INC., STRAINER, BALL VALVE & FLEX COUPLING
12	NOT USED
13	NOT USED
14	MAIN POWER UNFUSED DISCONNECT, NEMA 4
15	CONTROL PANEL, NEMA 4
16	LCS 150S LEVEL CONTROL BOX
17	NOT USED
*18	GEM MINI-SURESITE, 29" LG WITH 4-20 mA TRANSMITTER
19	NOT USED
20	NOT USED
21	
22	NOT USED
23	NOT USED
*24	NOT USED
*25	RELIEF VALVE, SET @ 50 PSIG, KUNKLE 6021 JH, 2" NPT INLET, 2-1/2" NPT OUTLET
*26	RELIEF VALVE, SET @ 50 PSIG, KUNKLE 6021 GF, 1-1/4" NPT INLET, \\" NPT OUTLET
27	NOT USED
28	CHEMICAL FEED QUILL, 316 SS, 1" TANK CONNECTION
29	TANK DRAIN VALVE, 2" NPT
30	NOT USED
31	NOT USED
32	NOT USED
33	NOT USED
34	MAGNESIUM ANODE, 18 IN, 1-1/4" TANK CONNECTION
35	MANWAY, 28" DIAMETER, DAVITED, WITH SEPCO 200 GASKET
*36	OVERFLOW DRAINER, WARREN 313, 2" FNPT
*37	MAKE-UP VALVE, SIEMENS 599, 1-1/2" NPT
38	NOT USED
39	NOT USED
40	NOT USED
*41	PRESSURE REDUCING VALVE, SPENCE ED, 1-1/2" NPT
42	NOT USED

SYSTEM SPECIFICATIONS

STAMP UNIT	O9462-1-1
MODEL	SMP-45-900
CONTROL TYPE	INTERMEDIATE
MAXIMUM LEVEL OF OXYGEN	0.005 cc / LITER
INLET CAPACITY	45,000 LBS/HR, 90 GPM
STORAGE CAPACITY	900 GALLONS TO OVERFLOW
FLOODED WEIGHT	10,800 LB
DESIGN PRESSURE	50 PSI

SPECIAL ENGINEERING

ELECTRICAL COMPONENTS FINGER SAFE

RIGID AND SEALTITE CONDUIT

CUSTOMER CONNECTIONS

LOCATION	CUSTOMER CONNECTIONS	
A	STEAM INLET	6"-150# FF FLG
B	WATER INLET	2-150# RF FLG
C	HIGH TEMPERATURE RETURN	2" FNPT
D	RELIEF VALVE CONNECTION	2-1/2" NPT
E	RELIEF VALVE CONNECTION	1-1/2" NPT
F	OVERFLOW	3" FNPT
G	DRAIN CONNECTION	2" NPT
H	CHEMICAL FEED CONNECTION	1/2" MNPT
J	SAMPLE CONNECTION	1/2" FNPT
K	TEMPERATURE CONNECTION	1/2" FNPT
L1-L2	PUMP DISCHARGE	2" FNPT
M	LEVEL CONTROL DRAIN	1-1/2" FNPT
N	AUTOMATIC VENT VALVE	1/2" FNPT
P	MANUAL VENT VALVE	3/4" FNPT
R	NOT USED	
S1-S2	OVERFLOW DRAINER	2" FNPT
T	NOT USED	
U1-U2	PUMP DISCHARGE	2" FNPT

SHIPPING DATA

TANK SIZE	135" L X 64" W X 83" H
TANK WEIGHT	3,200 LB
STAND SIZE	103" L X 73" W X 98" H
STAND WEIGHT	4,600 LB

THIS DRAWING IS PROPERTY OF CLEAVER-BROOKS DIVISION
IT IS SUBJECT TO CHANGE WITHOUT NOTICE, AND IS NOT TO BE COPIED OR USED IN ANY WAY DETRIMENTAL TO THE COMPANY.

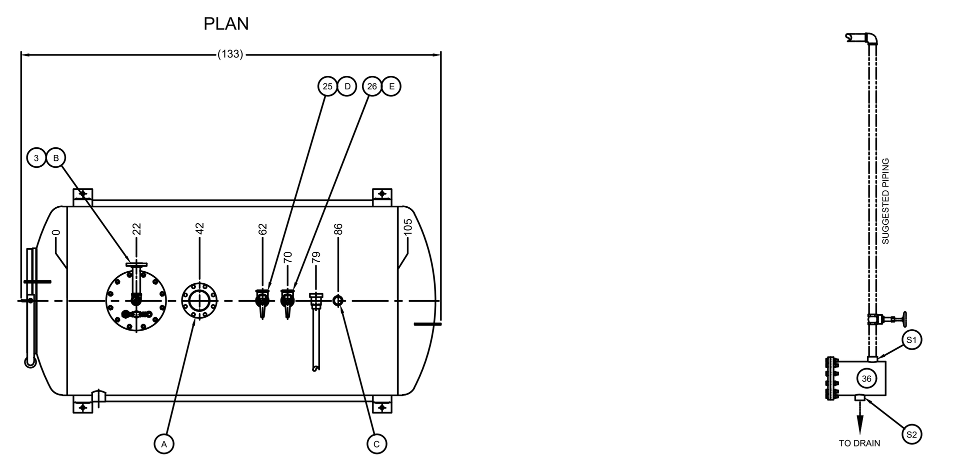

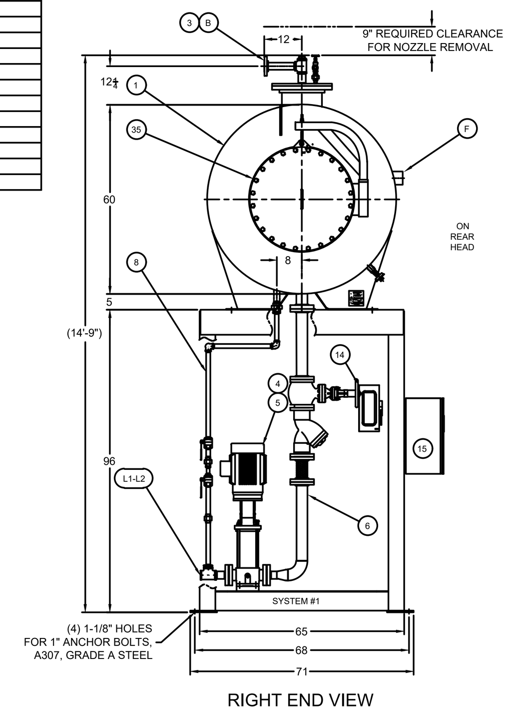

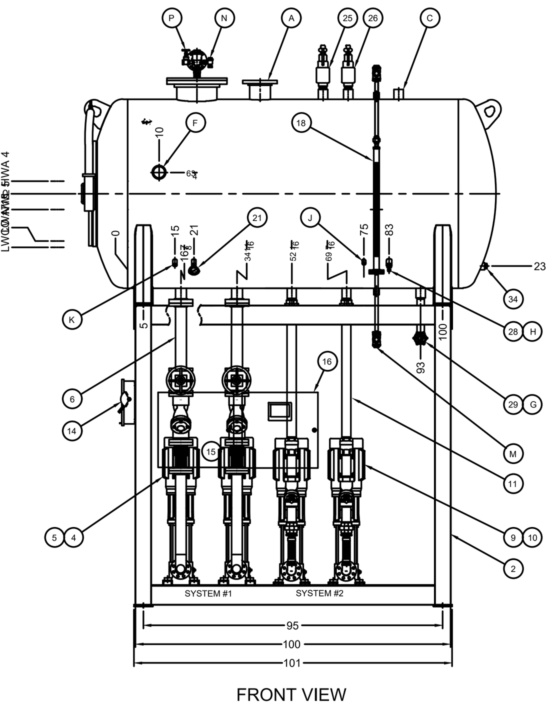

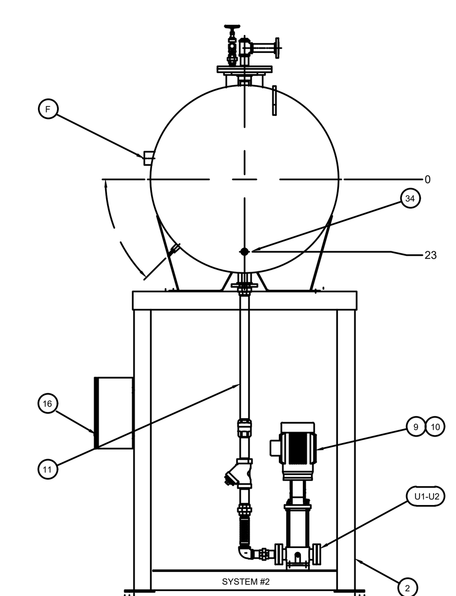

REVISIONS 00 --/--/-- ---

CAUTION
DIMENSIONS SHOWN ARE APPROXIMATE AND SHOULD NOT BE USED IN RESTRICTIVE LAYOUTS OR TO PREFABRICATE ASSEMBLIES UNLESS CLEAVER-BROOKS HAS BEEN CONSULTED. IT IS STRONGLY RECOMMENDED THAT THE CUSTOMER REQUEST AS-BUILT CERTIFIED DRAWINGS FOR THESE CASES.

WARNING
LIFTING LUGS PROVIDED ON THE VESSEL SHALL ONLY BE USED TO LIFT THE VESSEL WHEN IT IS DRY.

WARNING
CHANGES, MODIFICATIONS OR ALTERATIONS ARE STRICTLY PROHIBITED.
CHANGES TO THIS DRAWING AND SUBSEQUENT MODIFICATION OF EQUIPMENT COULD RESULT IN DAMAGE TO THE EQUIPMENT AND/OR SERIOUS PERSONAL INJURY.

O9462-1-1 | RENTAL DEAERATOR | DIMENSIONAL DIAGRAM | SIZE D | DEAERATOR SHT 01 OF 02 | SCALE N.T.S. | DATE 02/26/2014 | DRAWN CAD | CleaverBrooks | SMP (TYPE) 45 (CAPACITY) 900 (GALLONS) 2H/2I (PUMPS) | 460 (VOLTS) 3 (PHASE) 60 (HERTZ) 3 (WIRE) | DRWG. NO. O9462-1-1DD | 00

DEAERATOR/SURGE TANK DETAIL — NO SCALE — 2

LOCATION	CUSTOMER CONNECTIONS	
A	STEAM INLET	6"-150# FF FLG
B	WATER INLET	2-1/2"-150# RF FLG
C	SAFETY RELIEF VALVE CONNECTION (3)	2" FNPT
D	TEMPERATURE CONNECTION	3/4" FNPT
E	OVERFLOW	4"-150# FF FLG
F	DRAIN CONNECTION	2" FNPT
G	CHEMICAL FEED QUILL CONNECTION	1/2" FNPT
H	HIGH TEMPERATURE DIFFUSER TUBE CONNECTION	2-1/2"-150#FF FLG
J	LEVEL CONTROL DRAIN WITH ISOLATION AND DRAIN VALVES	1-1/2" FNPT
K	AUTOMATIC VENT VALVE	1/2" FNPT
L	MANUAL VENT VALVE	1" FNPT
M	PRESSURE GAUGE DRAIN	1/4" FNPT
N	DISCHARGE MANIFOLD CONNECTION	4"-300# RF FLG
P	FEEDWATER SECONDARY MUV BYPASS CONNECTION (2)	2-1/2"-150# FF FLG
Q	PRV BYPASS INLET CONNECTION	2-1/2"-150# FF FLG
R	PRV BYPASS OUTLET CONNECTION	4"-150# FF FLG
S	SAMPLE VALVE CONNECTION	1/2" FNPT

LOCATION	CUSTOMER CONNECTIONS	
AA	LOW PRESSURE RETURN (2)	4"-150# FF FLG
AB	VENT	6"-150# FF FLG
AC	COLD WATER INLET	2-1/2"-150# FF FLG
AD	OVERFLOW	4"-150# FF FLG
AE	SPARE	1" FNPT
AF	DRAIN CONNECTION	2" FNPT
AG	CHEMICAL FEED QUILL	1/2" MNPT
AH	LEVEL CONTROL DRAIN	1-1/2" FNPT
AJ	HIGH TEMPERATURE DIFFUSER TUBE CONNECTION	2-1/2"-150# FF FLG

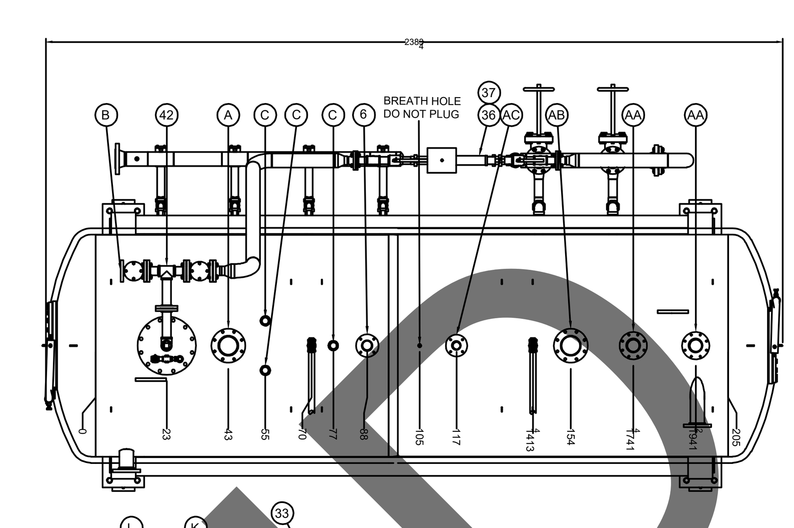

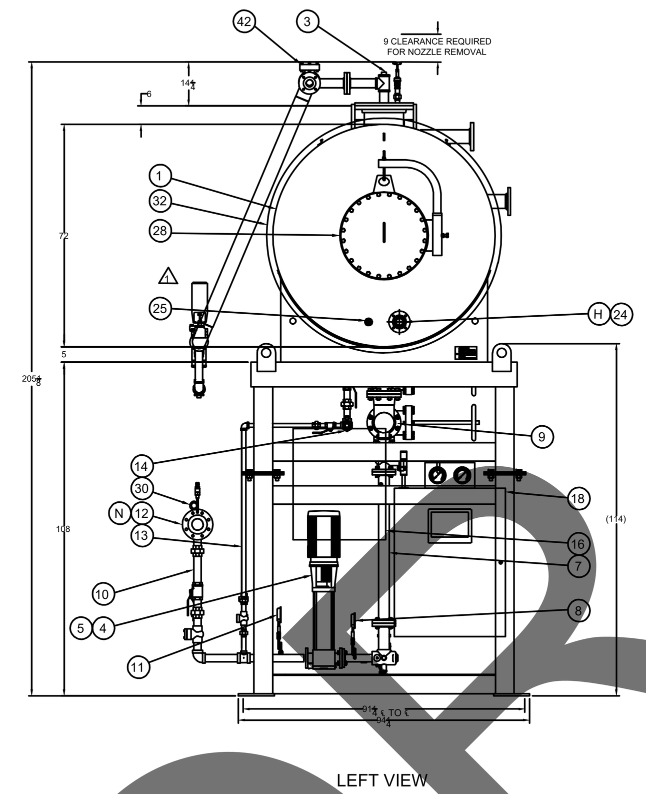

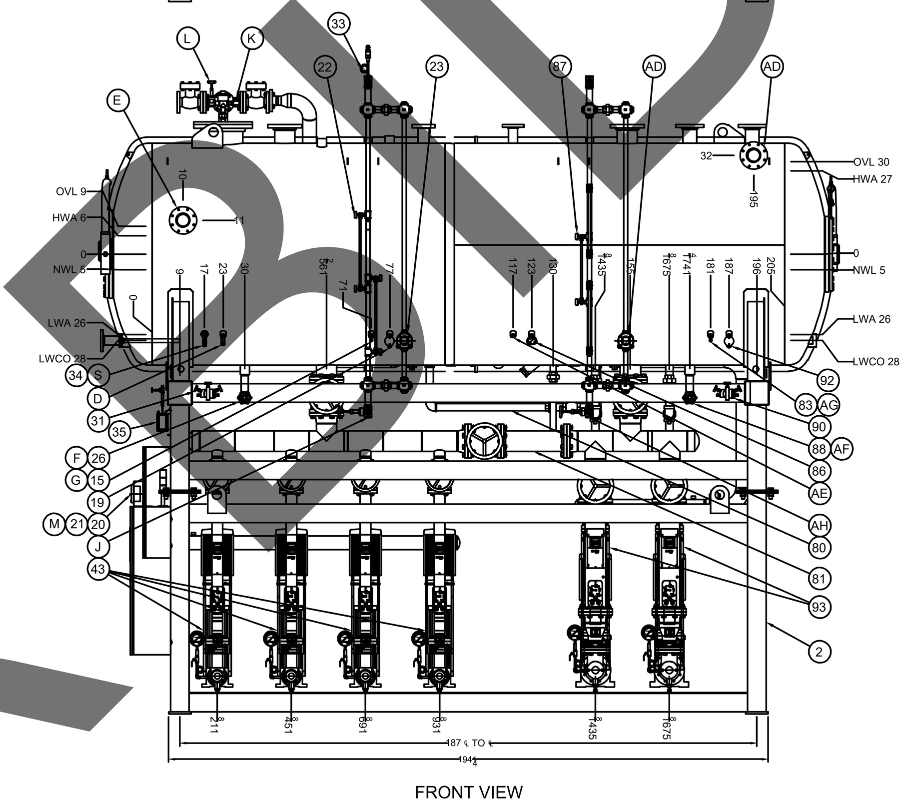

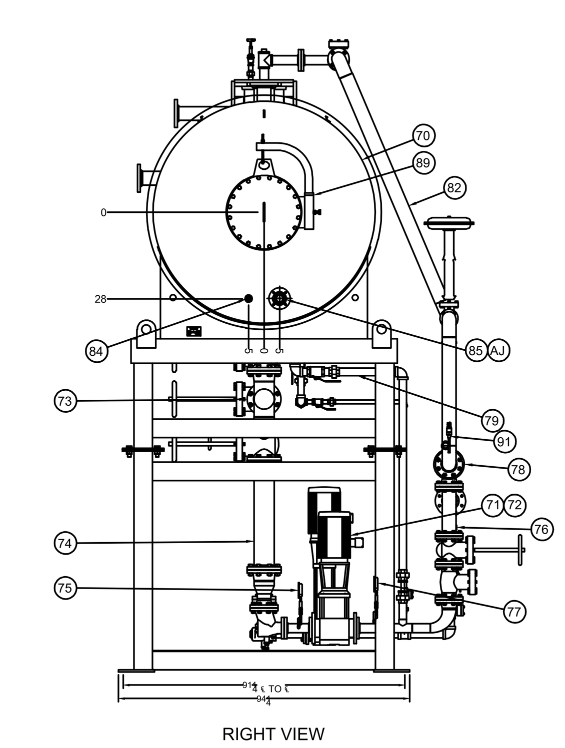

PIPE SUPPORTS (OPM-0043) — NO SCALE — 3

SEISMIC BRACKET ATTACHMENT TO CONCRETE FILLED METAL DECK WITH (1) HILTI KB-TZ CONCRETE ANCHOR

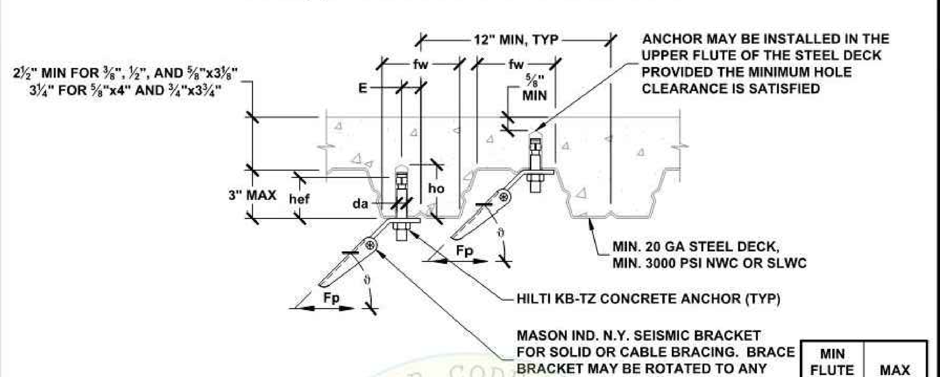

MIN FLUTE WIDTH fw INCH	MAX OFFSET E INCH
3⅞	15/16
4½	1

BRACE BRACKET ATTACHMENT TYPE	ALLOWABLE LATERAL LOAD Fp LBS	Ω_0 = 2.0[1] BRACE BRACKET ATTACHMENT TYPE	ALLOWABLE LATERAL LOAD Fp LBS	MAX BRACE RANGE θ	HILTI KB-TZ CONCRETE ANCHOR (ICC ESR-1917) SPECIAL INSPECTION REQ'D: DIA. da INCH	MIN. EFF. EMBED. hef INCH	MIN. HOLE DEPTH ho INCH	MIN. SPACING Smin INCH	MIN. END DIST. Cmin INCH	TORQUE REQ'D FT-LBS
38A TO 38C	190	38A TO 38C	190	30°- 45°	⅜	2	2⅝	MAX OF: 3*hef OR 1.5*FLUTE WIDTH	3⅜	25
38A TO 38A	120	38A TO 38A	120	46°- 60°						
50A TO 50C	200	50A TO 50C	200	30°- 45°	½	2	2⅝		3⅜	40
50A TO 50A	120	50A TO 50A	120	46°- 60°						
50A TO 50E	400	50A TO 50E	400	30°- 45°	½	3¼	4		4⅞	40
50A TO 50C	230	50A TO 50C	230	46°- 60°						
63A TO 63D	320	63A TO 63D	320	30°- 45°	⅝	3⅛	3¾		4 11/16	60
63A TO 63C	180	63A TO 63C	180	46°- 60°						
63A TO 63G	580	63A TO 63G	580	30°- 45°	⅝	4	4¾		6	60
63A TO 63D	340	63A TO 63D	340	46°- 60°						
75A TO 75F	490	75A TO 75F	490	30°- 45°	¾	3¾	4½		5⅝	110
75A TO 75D	280	75A TO 75D	280	46°- 60°						

SEE DETAIL N0.00 FOR SECTION NOTES
[1] OVERSTRENGTH FACTOR AS REQUIRED FOR ANCHORAGE TO CONCRETE.

MASON WEST, INC. 1601 E. Miraloma Ave. Placentia, CA 92870 TEL (714) 630 - 0701, www.masonwest.com | Jiefu "Jeff" Zhang, SE California SE No. S5270 | PAGE N2.20

HANGER ATTACHMENT TO CONCRETE FILLED METAL DECK WITH (1) HILTI KB-TZ CONCRETE ANCHOR

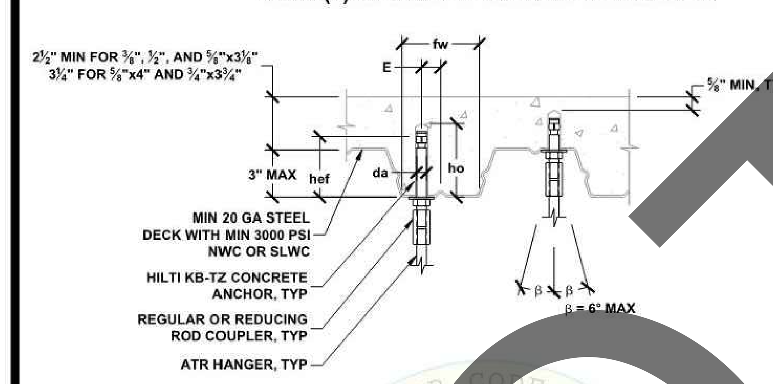

MIN FLUTE WIDTH fw INCH	MAX OFFSET E INCH
3⅞	15/16
4½	1

HANGER ATTACHMENT TYPE	ALLOWABLE VERTICAL LOAD Ta[1] LBS	MIN ATR HANGER DIA. INCH	HILTI KB-TZ CONCRETE ANCHOR (ICC ESR-1917) SPECIAL INSPECTION REQ'D: DIA. da INCH	MIN EFF. EMBED hef INCH	MIN HOLE DEPTH ho INCH	MIN SPACING Smin INCH	MIN END DIST. Cmin INCH	TORQUE REQ'D FT-LBS
38A TO 38G	580	⅜	⅜	2	2⅝	MAX OF: 3*hef OR 1.5*FLUTE WIDTH	3⅜	25
38A TO38G	580	⅜	½	2	2⅝		3⅜	40
50A TO 50G	580	½						
63A TO 63G	580	⅝						
38A TO 38K	1070	⅜	½	3¼	4		4⅞	40
50A TO 50K	1070	½						
63A TO 63K	1070	⅝						
50A TO 50H	820	½	⅝	3⅛	3¾		4 11/16	60
63A TO 63H	820	⅝						
75A TO 75H	820	¾						
50A TO 50L	1590	½	⅝	4	4¾		6	60
63A TO 63L	1590	⅝						
75A TO 75L	1590	¾						
63A TO 63L	1300	⅝	¾	3¾	4½		5⅝	110
75A TO 75L	1300	¾						
88A TO 88L	1300	⅞						

SEE DETAIL M0.00 FOR SECTION NOTES
[1] ALLOWABLE LOADS HAVE BEEN INCREASED BY A FACTOR OF 1.2 FOR LOAD COMBINATIONS INCLUDING OVERSTRENGTH, Ω_0, PER ASCE 7-10 SEC. 12.4.3.3.

MASON WEST, INC. 1601 E. Miraloma Ave. Placentia, CA 92870 TEL (714) 630 - 0701, www.masonwest.com | Jiefu "Jeff" Zhang, SE California SE No. S5270 | PAGE M2.20

HANGER ROD DIAMETER = ⅝" — PIPING/CONDUIT TRANSVERSE TRAPEZE SEISMIC SOLID BRACING SYSTEM 100 PLF MAX — KIT OPTIONS TSH54T TSH5T

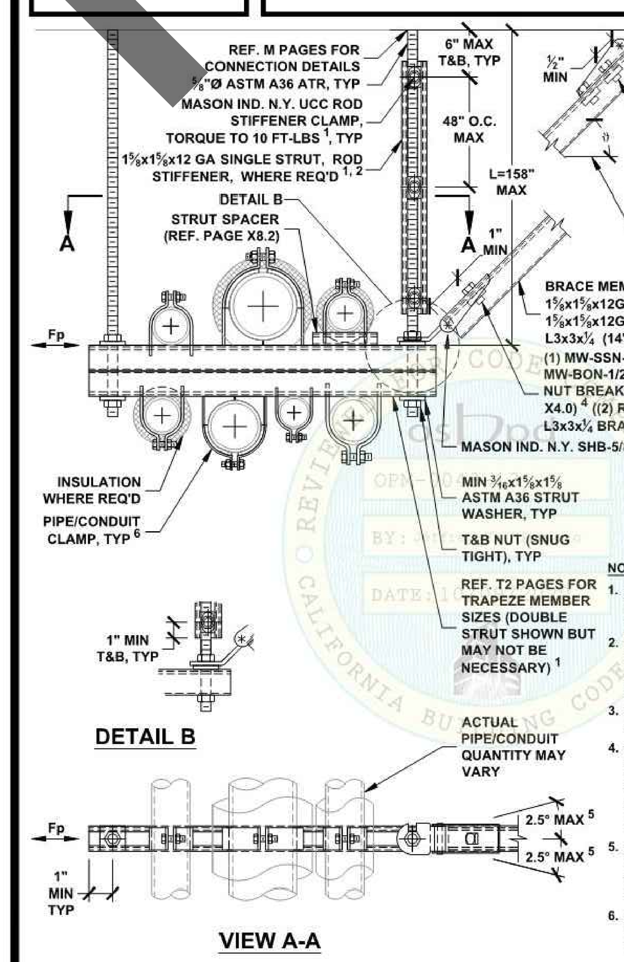

BRACE ANGLE RANGE θ	MAX ALLOWABLE FORCE PER SEISMIC BRACE ASSEMBLY, Fp[6]
30° - 45°	1050 LBS
46° - 60°	645 LBS

NOTES:
1. REF. SECTION A10 OR A20 FOR GENERAL NOTES. MAX ALLOWABLE FORCE, Fp, MAY BE LIMITED BY ANCHORAGE CAPACITY.
2. PROVIDE ROD STIFFENING ONLY WHERE SEISMIC BRACKETS ARE ATTACHED TO THE ROD AND ROD LENGTH (L) EXCEEDS 31". REF. APPROPRIATE M10 PAGES FOR DETAIL.
3. REF. SECTION A15 OR A25 FOR ALTERNATE ARRANGEMENTS OF SEISMIC BRACES.
4. PROVIDE (1) 1/2" DIA. CONNECTION IN CENTER HOLE WHEN STRUT BRACE IS INSTALLED INSIDE THE BRACKET AND (2) 1/2" DIA. CONNECTIONS IN (2) OUTER HOLES WHEN THE BRACE IS INSTALLED OUTSIDE OF THE BRACKET. REF. X2.3 FOR CONNECTION DETAILS.
5. TO INCREASE ANGLE UP TO 15°, REF. PAGE A14.1 OR A24.2. WHERE MW-SCCI PIPE CLAMP IS USED, ANGLE INCREASE SHALL BE LIMITED TO 10° MAX.
6. REF. X8.0 - X8.1.1, X8.6 - X8.6.3 FOR PIPE/CONDUIT CLAMP OPTIONS. CLAMP RATINGS MAY REDUCE MAX ALLOWABLE Fp.

MASON WEST, INC. 1601 E. Miraloma Ave. Placentia, CA 92870 TEL (714) 630 - 0701, www.masonwest.com | Jiefu "Jeff" Zhang, SE California SE No. S5270 | PAGE F1.33

DEAERATOR (DA-1) CONTROLS — NO SCALE — 1

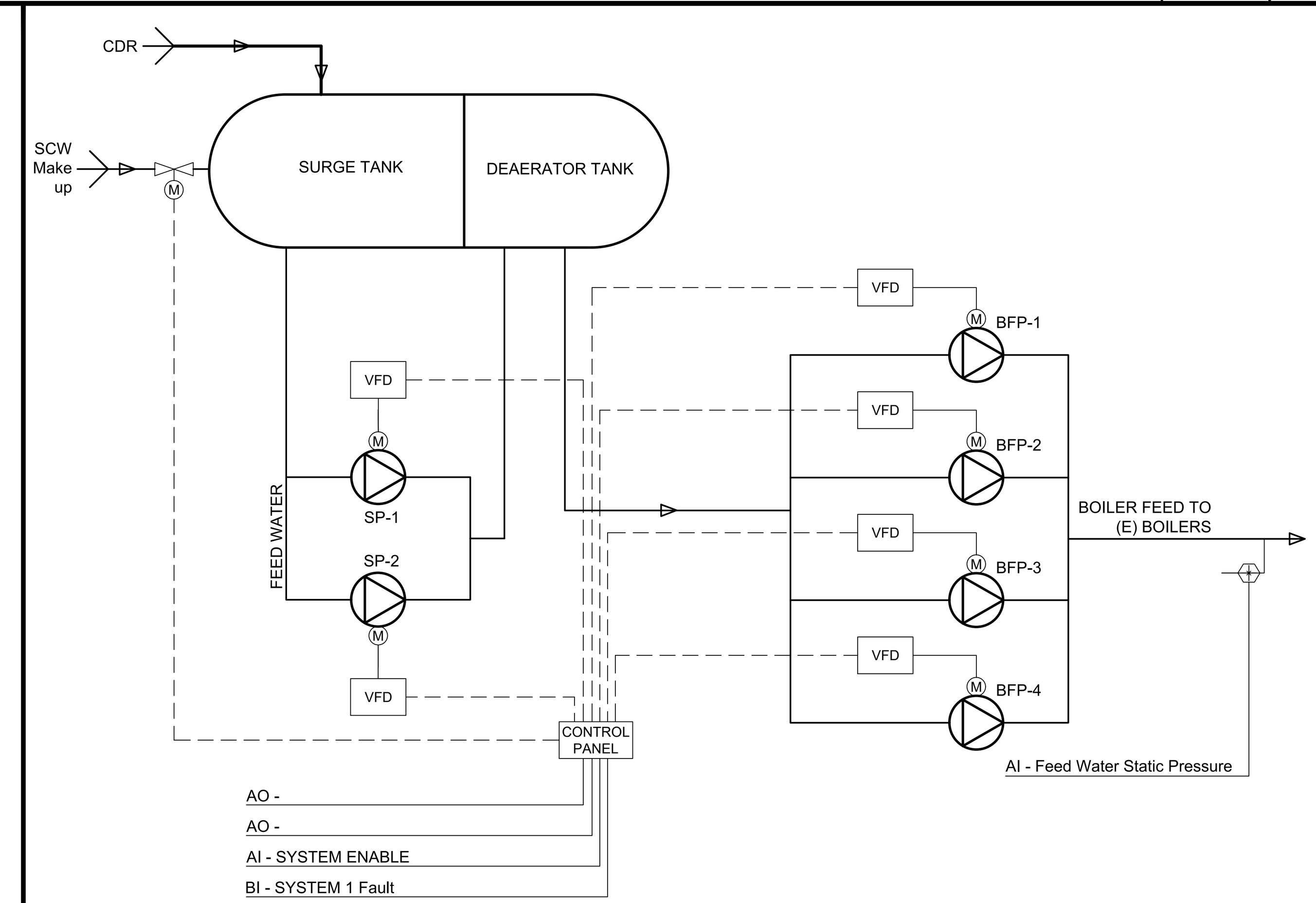

Steam Boiler Feed Controls

System Run Conditions:
The Deaerator system shall be enabled to run whenever:

- A there is a call for any of the steam boilers to run.

When Enabled the deaerator control panel will modulate based on factory controls and provide a set static pressure set point leading to the existing steam boilers.

The following safeties shall be monitored:

- Pump Status. Total 6
- Surge Tank water level.
- Make-up water valve position.

Alarms shall be provided as follows:

- Pump Fault.
- Surge Tank water level low.
- Surge Tank water level High.

PLAN CHECK - NOT FOR CONSTRUCTION

APPROVAL
REVIEWED IN ACCORDANCE WITH THE REQUIREMENTS OF T24, CCR
APPROVED
Department of Health Care Access & Information
Office of Statewide Hospital Planning & Development
8/9/2023, 7:23:46 AM
S230562-36-00
Allen Cheng

CLIENT
SAN BERNARDINO COUNTY
SAN BERNANDINO COUNTY PROJECT AND FACILITIES MANAGEMENT DEPARTMENT
385 NORTH ARROWHEAD AVENUE, 3RD FLOOR
SAN BERNARDINO, CA 92415-0184

PROJECT NAME
ARMC DEAERATOR #1 REPLACEMENT

PROJECT NO.
WBSE # 10.10.0847
CIP # 20-011
HCAi # S230562-36-00

FACILITY NO.
17282

BUILDING NO.
BLD-00075 CENTRAL PLANT

400 N. PEPPER AVENUE
COLTON, CA 92324-1801

ENGINEER/ARCHITECT
IDS GROUP
1 PETERS CANYON ROAD, SUITE 130
IRVINE, CA. 92606
TEL: 949-387-8500, FAX: 949-387-0800

STAMP
REGISTERED PROFESSIONAL ENGINEER DARREN B. SMITH No. 30841 Exp. 12/31/24 MECHANICAL STATE OF CALIFORNIA

STAMP

ISSUE

REV.	DESCRIPTION	DATE
	HCAi SUBMITTAL	04/28/23
A	BACK CHECK #1	06/16/23
B	BACK CHECK #2	07/28/23

PROJECT IDENTIFICATION

THIS DRAWING WAS CREATED IN AUTODESK AUTOCAD V. 2021 UNLESS OTHERWISE NOTED.

THE ORIGINAL SIZE OF THIS SHEET IS 30" X 42"

THESE DRAWINGS AND SPECIFICATIONS ARE THE PROPERTY AND COPYRIGHT OF IDS GROUP AND SHALL NOT BE USED ON ANY OTHER PROJECT OR LOCATIONS EXCEPT AS DESCRIBED ON THE DRAWINGS, WITHOUT THE WRITTEN AGREEMENT WITH IDS GROUP.

IDS PROJECT NO.	22X066.02
DRAWN BY	AZ
CHECKED BY	AZ
APPROVED BY	DS

SHEET TITLE
MECHANICAL DETAILS

SHEET NUMBER
M-501

SHEET NO. 006 OF 006

IDS GROUP - FILE LOCATION: S:\PROJECTS\2022\SHARED\22X066.02 ARMC - REPLACEMENT DEAERATOR 1\05 CAD\05 ELEC\22X06602_E001_NOTES PLOT DATE: 7/24/2023 2:27:17 PM USER: MANNY.OCAMPO

GENERAL ELECTRICAL NOTES

1. SYMBOLS ARE NOT NECESSARILY USED IN THIS PROJECT.
2. IT IS THE INTENT OF THESE DRAWINGS AND SPECIFICATIONS TO ESTABLISH A STANDARD OF QUALITY. THE ENGINEER RESERVES THE RIGHT TO ALLOW OTHER METHODS AND MATERIALS NOT REFLECTED HEREIN. THE CONTRACTOR SHALL BE RESPONSIBLE TO REQUEST THE ENGINEER WAIVE THE STANDARDS TO ALLOW ALTERNATE MEANS AND METHODS PRIOR TO BEGINNING THE PROJECT. CONTRACT DOCUMENT REVISIONS TO ACCOMMODATE INSTALLED CONDITIONS, WITHOUT PRIOR APPROVAL, WILL RESULT IN ADDITIONAL DESIGN CHARGES TO THE CONTRACTOR.
3. ELECTRICAL WORK SHALL BE PERFORMED IN A WORKMANLIKE MANNER IN ACCORDANCE WITH THE NECA INSTALLATION STANDARDS TO THE SATISFACTION OF THE ARCHITECT AND ENGINEER.
4. WORK, MATERIALS AND EQUIPMENT SHALL CONFORM TO THE CURRENTLY ACCEPTED EDITION OF APPLICABLE NATIONAL, STATE AND CITY CODES AND ORDINANCES.
5. ELECTRICAL SYSTEM COMPONENTS SHALL BE LISTED OR LABELED BY UL OR OTHER RECOGNIZED TESTING FACILITY AS ALLOWED BY AUTHORITY HAVING JURISDICTION.
6. WHERE AN APPARENT DISCREPANCY EXISTS BETWEEN THE REQUIREMENTS OF THE GENERAL NOTES AND INFORMATION PORTRAYED IN THE ELECTRICAL DRAWINGS, THE CONTRACTOR SHALL INCLUDE IN HIS BID THE COST OF THE GREATER QUALITY OR QUANTITY.
7. CONTRACTOR SHALL VISIT JOB SITE PRIOR TO BID AND VERIFY EXISTING CONDITIONS. CONTRACTOR SHALL INCLUDE IN BASE BID COSTS REQUIRED FOR PERMITS AND INSPECTIONS.
8. CONTRACTOR SHALL VERIFY, WITH OWNER'S REPRESENTATIVE PRIOR TO SUBMITTING BID, ALLOWABLE WORKING HOURS, EMPLOYEE PARKING AREAS, MATERIAL DELIVERY, STORAGE REQUIREMENTS, DEMOLITION AND REMOVAL OF CONSTRUCTION DEBRIS, AS WELL AS DAILY CLEAN UP REQUIREMENTS. INCLUDE COSTS IN BID FOR DUST BARRIERS, DUMPSTERS ETC. AS REQUIRED FOR THE DURATION OF THE PROJECT. PERFORM WORK AS DIRECTED BY OWNER'S REPRESENTATIVE AND ARCHITECT.
9. ELECTRICAL SYSTEMS SHALL BE TESTED FOR PROPER OPERATION. IF TESTS SHOW THAT WORK IS DEFECTIVE, CONTRACTOR SHALL MAKE NECESSARY CORRECTIONS.
10. CONTRACTOR SHALL GUARANTEE WORK AGAINST DEFECTS IN MATERIALS AND WORKMANSHIP WHICH MAY OCCUR UNDER NORMAL USE FOR A PERIOD OF ONE YEAR AFTER OWNER'S ACCEPTANCE. DEFECTS SHALL BE PROMPTLY CORRECTED BY CONTRACTOR WITHOUT ADDITIONAL CHARGE TO OWNER.
11. PROVIDE AS-BUILT DRAWINGS TO ARCHITECT. DRAWINGS SHALL INCLUDE ACCURATE CONDUIT AND DEVICE LOCATIONS DIMENSIONED FROM PERMANENT LANDMARKS SUCH AS BUILDING WALLS.
12. DO NOT SCALE ELECTRICAL DRAWINGS. VERIFY EXACT LOCATION OF ALL DEVICES, JUNCTION BOXES, LIGHTING FIXTURES, WITH ARCHITECTURAL AND INTERIOR DESIGN DRAWINGS PRIOR TO INSTALLATION. CONTRACTOR SHALL VERIFY THE EXACT LOCATION OF MECHANICAL EQUIPMENT AND OTHER EQUIPMENT REQUIRING ELECTRICAL CONNECTION PRIOR TO ROUGH-IN. EVERY OUTLET HEIGHT SHALL BE VERIFIED ON EACH WALL WITH THE INTERIOR PLANNING AND DESIGN DRAWINGS. COORDINATE WITH CABINET SHOP DRAWINGS TO ENSURE PROPER HEIGHT AND LOCATION WITH RESPECT TO MILLWORK, EQUIPMENT.
13. THESE DRAWINGS INDICATE THE FINISHED REQUIREMENTS FOR THE ELECTRICAL SYSTEMS, EQUIPMENT, LIGHTING FIXTURES, OUTLETS AND DEVICES. DUE TO STRUCTURAL CONDITIONS, MECHANICAL DUCT, PIPING CONFLICTS, OR OTHER LEGITIMATE REASONS, THE CONTRACTOR MAY DESIRE TO INSTALL THE WORK INDICATED IN A MANNER DIFFERENT FROM THAT SHOWN. SUCH CHANGES SHALL BE PRESENTED TO THE OWNER'S REPRESENTATIVE FOR REVIEW AND APPROVAL PRIOR TO PROCEEDING. UPON APPROVAL, THE WORK SHALL BE PERFORMED AND THE AS-BUILT DRAWINGS SHALL BE REVISED TO ACCURATELY REFLECT THE WORK AS ACTUALLY INSTALLED.
14. RACEWAY SYSTEMS ARE SHOWN DIAGRAMMATICALLY. ACTUAL LOCATION AND ROUTING SHALL BE DETERMINED BY CONTRACTOR TO SUIT FIELD CONDITIONS.
15. PROVIDE DEDICATED NEUTRAL FOR EACH NEW CIRCUIT. HOME RUN CONDUCTORS MAY BE COMBINED INTO ONE CONDUIT. NO RACEWAY OR CABLE SHALL CONTAIN MORE THAN NINE (9) CURRENT CARRYING CONDUCTORS. WHERE MULTIPLE CONDUCTORS IN EXCESS OF THREE (3) ARE INDICATED ON THESE DRAWINGS, THEY HAVE BEEN DERATED AS REQUIRED BY CEC ARTICLE 310 REQUIREMENTS.
16. WHERE ALLOWED, MC CABLE MAY BE INSTALLED PER CEC ARTICLE 330. WHERE MULTIPLE CABLES ARE ROUTED ADJACENT TO EACH OTHER (BUNDLED), A MINIMUM SEPARATION OF ONE (1) CABLE DIAMETER (LARGEST) SHALL BE REQUIRED.
17. PLASTIC CABLE TIES SHALL NOT BE USED AS A MEANS OF SUPPORT FOR MC CABLE. USE ONLY APPROVED CABLE SUPPORTS PER CABLE MANUFACTURER'S INSTALLATION REQUIREMENTS.
18. RACEWAYS SHALL BE INSTALLED CONCEALED (IN CMU OR OTHER WALL) WHENEVER POSSIBLE. RACEWAYS INSTALLED EXPOSED SHALL BE ROUTED OUT OF PUBLIC VIEW AS MUCH AS POSSIBLE. RACEWAYS SHALL BE RUN PARALLEL WITH, OR AT RIGHT ANGLE TO WALLS.
19. PROVIDE APPROVED EXPANSION FITTINGS WHERE RACEWAYS CROSS BUILDING EXPANSION JOINTS. PROVIDE BONDING JUMPER(S) SIZED PER CODE WHERE REQUIRED. PROVIDE FITTINGS REQUIRED FOR A COMPLETE INSTALLATION. REFER TO ARCHITECTURAL DRAWINGS FOR EXPANSION JOINT LOCATION(S).
20. MINIMUM RACEWAY SIZE SHALL BE 1/2". MINIMUM HOMERUN SIZE SHALL BE 3/4". MINIMUM CONDUCTOR SIZE SHALL BE #12 AWG U.N.O. TYPICAL. POWER RELATED CONDUITS SHALL HAVE A CODE SIZE GROUND WIRE INSTALLED IN EACH RUN.
21. CONTRACTOR SHALL PROVIDE PULL CORDS IN ALL EMPTY CONDUITS. WHERE MORE THAN ONE CONDUIT TERMINATES IN A JUNCTION BOX, THE CONTRACTOR SHALL IDENTIFY EACH CONDUIT AND JUNCTION BOX IN A MANNER ALLOWING IDENTIFICATION AFTER WALL FINISHES HAVE BEEN APPLIED.
22. CONTRACTOR SHALL PROVIDE RACEWAY SYSTEMS INDICATED ON THE DRAWING PER CEC REQUIREMENTS AND GENERAL NOTES. ANY DEVIATION FROM THE WIRING METHODS INDICATED SHALL BE ALLOWED ONLY BY SPECIFIC WRITTEN APPROVAL FROM EITHER THE ARCHITECT, ENGINEER OR OWNER. CONTRACTOR'S BID SHALL INCLUDE COSTS FOR RACEWAY SYSTEMS AS SPECIFIED UNLESS SPECIFIC WRITTEN APPROVAL FOR AN ALTERNATIVE WIRING METHOD IS OBTAINED FROM EITHER THE ARCHITECT, ENGINEER OR OWNER AND IS SUBMITTED AS PART OF CONTRACTOR'S FORMAL BID PROPOSAL.
23. CONTRACTOR SHALL BE RESPONSIBLE FOR CORRECT SIZE AND INSTALLATION OF OUTLET, PULL AND JUNCTION BOXES IN ACCORDANCE WITH CEC 314-16. BOXES SHALL BE MINIMUM 4" SQUARE BY 1-1/2" DEEP OR AS INDICATED ON THE DRAWINGS. BOXES SHALL BE RECESSED WITH COVER PLATE TO SUIT THE INTENDED APPLICATION.
24. REFER TO THE ARCHITECTURAL REFLECTED CEILING PLAN(S) FOR EXACT LOCATION OF CEILING MOUNTED LIGHTING FIXTURES. ARCHITECTURAL DRAWINGS SHALL GOVERN IN CASE OF CONFLICT WITH THESE DRAWINGS.
25. PRIOR TO INSTALLATION, CONTRACTOR SHALL REVIEW THE COMPLETE SET OF CONSTRUCTION DOCUMENTS FOR CONFLICTS WITH OTHER TRADES. CONTRACTOR SHALL BE RESPONSIBLE TO COORDINATE WORK WITH OTHER TRADES TO AVOID CONFLICT DURING INSTALLATION. CONTRACTOR SHALL MAKE MINOR ADJUSTMENTS IN EQUIPMENT LOCATION AND ROUTING AS NECESSARY.
26. CONTRACTOR SHALL BE RESPONSIBLE TO PROPERLY CUT AND PATCH EXISTING CONSTRUCTION AS REQUIRED TO INSTALL NEW ELECTRICAL WORK PATCHING SHALL BE OF THE SAME MATERIALS, WORKMANSHIP AND FINISH AS THE EXISTING WORK AND SHALL ACCURATELY MATCH SURROUNDING WORK TO THE SATISFACTION OF THE ARCHITECT.
27. ELECTRICAL EQUIPMENT SHALL HAVE SUFFICIENT GUTTER SPACE AND LUGS TO ACCOMMODATE QUANTITY AND SIZE OF CONDUCTORS REQUIRED. CONTRACTORS SHALL PROVIDE EQUIPMENT WITH OVERSIZED ENCLOSURES WHERE REQUIRED.
28. NEW PANELBOARDS AND SWITCHBOARDS SHALL BE OF THE SAME MANUFACTURER AND HAVE LOCKING DOORS AND BE KEYED THE SAME U.N.O.
29. PROVIDE TYPE WRITTEN UPDATED PANEL DIRECTORY TO BE MOUNTED ON INSIDE OF PANEL DOOR COVERS. DIRECTORY SHALL REFLECT ADDITIONS OR MODIFICATIONS TO EXISTING PANELS AND SHALL REFLECT ACTUAL "AS-BUILT" CONDITIONS.
30. VERIFY DEVICE COLOR AND MOUNTING ORIENTATION (VERTICAL OR HORIZONTAL) WITH ARCHITECTURAL AND INTERIOR DESIGN DRAWINGS PRIOR TO ORDERING ANY EQUIPMENT AND PROVIDE DEVICES AS REQUIRED. UNLESS NOTED OTHERWISE, DEVICES AND DEVICE PLATES SHALL BE WHITE IN COLOR.
31. WHERE MOTORS ARE INSTALLED IN SUSPENDED CEILINGS, CONTRACTOR SHALL PROVIDE DISCONNECT SWITCH IN SUSPENDED CEILING WITHIN REACH FROM ACCESS POINT.
32. SIZING OF MOTOR-RELATED ELECTRICAL COMPONENTS, INCLUDING FEEDER AND/ OR BRANCH CIRCUITS (WIRE AND CONDUIT) AND OVERCURRENT PROTECTION (BREAKER AND/ OR FUSES) IS BASED ON RATINGS INDICATED IN THE CONTRACT DOCUMENTS AS WELL AS CEC APPROXIMATED LOADS FOR A GIVEN MOTOR HORSEPOWER, VOLTAGE AND PHASE. IT IS THE CONTRACTOR'S RESPONSIBILITY TO VERIFY ACTUAL MOTOR AND APPLIANCE RATING AND LOADS. CONTRACTOR TO PROVIDE CORRECTLY SIZED MOTOR OVERLOAD ELECTRICAL COMPONENTS BASED ON NAMEPLATE RATING. REFLECT CHANGES IN THE AS-BUILT DRAWINGS.
33. CONTRACTOR SHALL SUBMIT SHOP DRAWINGS TO ARCHITECT FOR REVIEW OF THE FOLLOWING EQUIPMENT:
    a. ELECTRICAL SWITCHGEAR: SWITCHBOARDS, WITH PANELS, MOTOR CONTROL
    b. CENTERS AND SAFETY DEVICES.
    c. OVERCURRENT DEVICES: CIRCUIT BREAKERS AND FUSES INCLUDING
    d. TIME/CURRENT TRIP CURVES.
    e. LIGHTING FIXTURES: INDOOR/OUTDOOR AS SPECIFIED, PHOTOMETRIC
    f. PERFORMANCE DATA AND LAMPS.
    g. DEVICES: SWITCHES, RECEPTACLES, MOTOR CONTROLLERS AND
    h. DEVICE PLATES.
    i. LIFE SAFTY/FIRE ALARM SYSTEM: CONTROL PANEL, ANNUNCIATOR PANEL,
    j. INITIATION AND NOTIFICATION DEVICES/APPLIANCES, SYSTEM WIRING
    k. REQUIREMENTS AND DIAGRAM, SYSTEM LOAD CALCS, STANDARD BATTERY
    l. CALCULATIONS, AND AUXILIARY POWER SUPPLY.
34. EQUIPMENT ELECTRICAL TERMINATIONS TO UNDERGO A TORQUE TEST. ELECTRICAL CONTRACTOR IS RESPONSIBLE FOR MANUFACTURER'S RECOMMENDED TORQUE DOCUMENTATION AND TOOLS TO PERFORM TORQUE TEST.
35. UNDERGROUND SERVICE CONDUITS SHALL BE SEALED PER CEC ARTICLE 230-8.
36. FLOOR MOUNTED ELECTRICAL EQUIPMENT SHALL BE MOUNTED ON A 4" HIGH CONCRETE PAD.
37. INSTALL TRANSFORMER FOLLOWING MANUFACTURER'S RECOMMENDATIONS FOR VENTILATION CLEARANCES.
38. COORDINATE ELECTRICAL REQUIREMENTS FOR PLUMBING AND MECHANICAL EQUIPMENT WITH FINAL CONTRACTOR SELECTION. THE CONTRACTOR SHALL SIZE DISCONNECTS BASED UPON CIRCUIT BREAKER RATINGS AND PROVIDE FUSING AS REQUIRED PER EQUIPMENT MANUFACTURER RECOMMENDATIONS AND U.L. LISTING REQUIREMENTS.
39. PROVIDE 10 AWG CONDUCTORS FOR 20 AMPERE, 120V BRANCH CIRCUITS LONGER THAN 75' AND 8 AWG CONDUCTORS FOR 20 AMPERE, 120V BRANCH CIRCUITS LONGER THAN 120'. PROVIDE 10 AWG CONDUCTORS FOR 20 AMPERE, 277V BRANCH CIRCUITS LONGER THAN 200'.
40. ALL ELECTRICAL EQUIPMENT SHALL BE LABELED, LISTED, OR CERTIFIED BY A NATIONALLY RECOGNIZED TESTING LABORATORY ACCREDITED BY THE UNITED STATES OCCUPATIONAL SAFETY HEALTH ADMINISTRATION.
41. ALL NEW CIRCUIT BREAKERS INSTALLED IN PANELS SHALL MATCH THE HIGHEST EXISTING AIC RATED CIRCUIT BREAKER WITHIN THAT BOARD. INSPECTOR TO VERIFY HIGHEST AIC RATING AT THE SITE."

SINGLE LINE DIAGRAM

- CIRCUIT BREAKER
- UTILITY COMPANY SERVICE CABLE TERMINATION
- FUSE
- FUSED DISCONNECT SWITCH
- SWITCH
- TVSS — TRANSIENT VOLTAGE SURGE SUPPRESSOR
- CURRENT TRANSFORMER (CT)
- POTENTIAL TRANSFORMER
- GROUNDING ELECTRODE
- M — UTILITY COMPANY POWER METER
- # — MOTOR (# INDICATED HP)
- M — CUSTOMER OWNED POWER METER
- G — GENERATOR
- ST — SHUNT TRIP
- GFPD — GROUND FAULT PROTECTION DEVICE
- TRANSFER SWITCH ATS OR MTS AND NUMBER OF POLES AS NOTED
- CONTACTOR (NORMALLY OPEN)
- CONTACTOR (NORMALLY CLOSED)
- TIME SWITCH
- CONTROL SWITCH
- PUSH BUTTON
- T AC-1 — THERMOSTAT OUTLET AT +54" (HVAC UNIT DESIGNATION)
- ENCLOSED CIRCUIT BREAKER
- R — RELAY
- C — CONTACTOR

Add the EEOR's inspection and observation report on TIO.

LIGHTING

- LINEAR LED FIXTURE RECESSED MOUNT
- LINEAR LED FIXTURE SUSPENDED OR PENDANT
- LED WALL MOUNT FIXTURE
- LINEAR LED STRIP FIXTURE
- LED DOWNLIGHT RECESSED OR SURFACE
- PENDANT FIXTURE
- LED WALL MOUNTED LIGHT FIXTURE
- LED WALL SCONCE
- LED WALL WASHER
- MONO-POINT LIGHT FIXTURE
- PARKING LOT POLE MOUNTED LIGHT FIXTURE
- BOLLARD LIGHT FIXTURE
- EXIT SIGN - CEILING MOUNTED (SHADE INDICATES FACE)
- EXIT SIGN - WALL MOUNTED (SHADE INDICATES FACE)
- EXIT SIGN - W/ARROWS INDICATE DIRECTION
- EMERGENCY BUG EYE FIXTURE WITH 90 MIN BATTERY BACKUP
- A 1b — LIGHTING FIXTURE NOTATION A, 1, b INDICATES:
  - A = FIXTURE TYPE, REFER TO SCHEDULE
  - 1 = CIRCUIT NUMBER
  - b = SWITCH CONTROLLING FIXTURE
  - ab =BI-LEVEL/DUAL SWITCH CONTROL
- HALF SHADED LINEAR LED OR SOLID DOWNLIGHT FIXTURE FURNISHED ON EMERGENCY POWER.
- $ D,K $ abcd 2,3,4 — WALL SWITCH, +48" OR AS NOTED: SUBSCRIPTS AT SYMBOL INDICATE THE FOLLOWING:
  - 2 - DOUBLE POLE (20A, 120/277V)
  - 3 - THREE WAY (20A, 120/277V)
  - 4 - FOUR WAY (20A, 120/277V)
  - D - DIMMER SWITCH (20A, 120/277V)
  - K - KEY OPERATED (20A, 120/277V)
  - M - MOTOR STARTING SWITCH (20A, 120/277V)
  - P - PILOT LIGHT (20A, 120/277V)
  - R - REMOTE CONTROL SWITCH (20A, 120/277V)
  - T - TIMER SWITCH (0-60 MIN.) (20A, 120/277V)
- OS — OCCUPANCY SENSOR - CEILING
- OS — OCCUPANCY SENSOR - WALL MOUNTED
- OS D — OCCUPANCY SENSOR w/DIMMER- WALL MOUNTED
- LC — LIGHTING CONTACTOR
- PC — PHOTOCELL
- PP — LIGHTING CONTROL POWER PACK

POWER

- SINGLE RECEPTACLE, NEMA 5-20R, 20A, 125V, MOUNT CENTER OF OUTLET AT 18" A.F.F. U.N.O.
- DUPLEX RECEPTACLE, NEMA 5-20R, 20A, 125V RATED, MOUNT CENTER OF OUTLET AT 18" A.F.F. U.N.O.
- DEDICATED DUPLEX RECEPTACLE, NEMA 5-20R, 20A, 125V RATED MOUNT CENTER OF OUTLET AT 18" A.F.F. U.N.O.
- G — DEDICATED DUPLEX RECEPTACLE, NEMA 5-20R, 20A, 125V, GFCI TYPE, RATED MOUNT CENTER OF OUTLET AT 18" A.F.F. U.N.O.
- C — DUPLEX RECEPTACLE / HALF-SWITCHED "C" INDICATES CONTROLLED VIA MOTION SENSOR/TIME CLOCK, MOUNT CENTER OF OUTLET AT 18" A.F.F. U.N.O.
- DUPLEX RECEPTACLE NEMA 5-20R 125V RATED MOUNTED 6" ABOVE COUNTER SPLASH
- DUPLEX RECEPTACLE NEMA 5-20R, 20A, 125V GFCI TYPE, MOUNTED 6" ABOVE COUNTER SPLASH
- QUADPLEX RECEPTACLE, NEMA 5-20R, 20A, 125V, MOUNT CENTER OF OUTLET AT 18" A.F.F. U.N.O.
- SPECIAL RECEPTACLE 480V RATED w/GROUND AS NOTED
- SPECIAL RECEPTACLE. 250V RATED AS NOTED
- DUPLEX RECEPTACLE NEMA 5-20R, 20A, 125V - FLUSH MOUNT CEILING
- POWER FLOOR OUTLET w/ DEVICE AS INDICATED
- COMBINATION POWER / DATA FLOOR OUTLET AS INDICATED
- COMBINATION USB/DUPLEX NEMA 5-20R, 125V, MOUNTED 18" A.F.F. U.N.O.
- COMBINATION USB/DUPLEX NEMA 5-20R, 125V, MOUNTED 6" ABOVE COUNTER SPLASH
- J — JUNCTION BOX
- J — JUNCTION BOX - WALL MOUNT
- J — JUNCTION BOX - FLUSH FLOOR MOUNT
- MULTI-OUTLET SURFACE RACEWAY w/ NEMA 5-20R, 20A, 125V AT 12" ON CENTER., U.N.O.
- PB — PULLBOX - EXTERIOR OR INTERIOR AS INDICATED
- LIGHTING AND APPLIANCE PANELBOARD - SURFACE MOUNT
- LIGHTING AND APPLIANCE PANELBOARD - FLUSH MOUNT
- SWITCHBOARD OR DISTRIBUTION BOARD
- ATS — AUTOMATIC TRANSFER SWITCH
- VFD — VARIABLE FREQUENCY DRIVE
- METER SERVICE PEDESTAL
- PUSH BUTTON CONTROL STATION
- $ 2P M — MOTOR RATED MANUAL DISCONNECT SWITCH
- NON-FUSED DISCONNECT SWITCH (WITH SEALTITE RACEWAY CONNECTION
- F — FUSED DISCONNECT SWITCH
- MOTOR CONTROLLER OR STARTER
- F — COMBINATION FUSIBLE DISCONNECT W/MOTOR STARTER AS NOTES

SIGNAL

- COMBINATION TELE/DATA OUTLET AT +18"
- TELEPHONE OUTLET AT +18"
- DATA OUTLET AT +18"
- TELE/DATA OUTLET MOUNTED 6" ABOVE COUNTER SPLASH
- TELEPHONE OUTLET MOUNTED 6" ABOVE COUNTER SPLASH
- DATA OUTLET MOUNTED 6" ABOVE COUNTER SPLASH
- TELE/DATA CEILING OUTLET
- DATA CEILING OUTLET
- CR — CARD READER
- S — CEILING MOUNTED SPEAKER
- C — CAMERA (CCTV)
- FLUSH FLOOR BOX WITH COMBINATION TELE/DATA OUTLET
- TV — TELEVISION OUTLET
- TS — TIME SWITCH
- T — POWER TRANSFORMER. SIZE AND TYPE NOTED ON PLANS AND SPECIFICATIONS
- TELEPHONE BACKBOARD

FIRE ALARM

- FACP — FIRE ALARM CONTROL PANEL 120V
- FATC — FIRE ALARM TERMINAL CABINET
- ANN — FIRE ALARM ANNUNCIATOR
- FS — FLOW SWITCH
- TS — TAMPER SWITCH
- DD — DUCT MOUNTED SMOKE DETECTOR
- CSFD — COMBINATION SMOKE FIRE DAMPER
- FIRE ALARM PULL STATION
- DH — ELECTROMAGNETIC DOOR HOLDER
- WALL MOUNTED FIRE ALARM HORN SPEAKER DEVICE "CD" INDICATES CANDELA; "db" INDICATES DECIBEL LEVEL
- 15cd 30cd 75cd — WALL MOUNTED HORN STROBE DEVICE "cd" INDICATES CANDELA; "db" INDICATES DECIBEL LEVEL
- WALL MOUNTED STROBE DEVICE "cd" INDICATES CANDELA
- CEILING MOUNTED STROBE DEVICE "CD" INDICATES CANDELA
- SD — FIRE ALARM SMOKE DETECTOR DEVICE
- HEAT DETECTOR
- CO — CARBON MONOXIDE DETECTOR
- FIRE ALARM BELL MOUNTED +90"A.F.F. PER NFPA72 18.4.8.1

WIRING

- CONDUIT ROUTED EXPOSED
- CONDUIT ROUTED UNDER FLOOR/UNDERGROUND
- RACEWAY CONCEALED IN WALL OR CEILING 1/2"C, 2#12 AND 1#12 GND - TYPICAL U.N.O.
- RACEWAY TURNED UP 1/2"C, 2#12 AND 1#12 GND - TYPICAL U.N.O.
- RACEWAY TURNED DOWN 1/2"C, 2#12 AND 1#12 GND - TYPICAL U.N.O.
- MIN. 3/4"C- HOMERUN TO PANELBOARD
- CONDUIT CAP-OFF

MISCELLANEOUS

- UNIT # — MECHANICAL EQUIPMENT TAG
- # SHEET — DIAGRAM TAG
- 1 — KEYNOTE PLAN SYMBOL
- 1 — DEMOLITION KEYNOTE PLAN SYMBOL
- 1 — REVISION SYMBOL
- XXX — FEEDER SCHEDULED EQUIPMENT
- XXXX — ELECTRICAL EQUIPMENT TAG

APPLICABLE CODES

- 2022 CALIFORNIA ELECTRICAL CODE (CEC) PART 3, TITLE 24, CALIFORNIA CODE OF REGULATIONS (CCR)
- 2020 NATIONAL ELECTRICAL CODE (NEC) NFPA 70
- 2022 CALIFORNIA ADMINISTRATIVE CODE (CAC) PART 1, TITLE 24, CALIFORNIA CODE OF REGULATIONS (CCR)
- 2022 CALIFORNIA BUILDING CODE (CBC) PART 2, TITLE 24, CALIFORNIA CODE OF REGULATIONS (CCR)
- 2022 CALIFORNIA MECHANICAL CODE (CMC) PART 4, TITLE 24, CALIFORNIA CODE OF REGULATIONS (CCR)
- 2022 CALIFORNIA PLUMBING CODE (CPC) PART 5, TITLE 24, CALIFORNIA CODE OF REGULATIONS (CCR)
- 2022 CALIFORNIA ENERGY CODE (CEC) PART 6, TITLE 24, CALIFORNIA CODE OF REGULATIONS (CCR)
- 2022 CALIFORNIA FIRE CODE (CFC) PART 9, TITLE 24, CALIFORNIA CODE OF REGULATIONS (CCR)
- 2022 CALIFORNIA GREEN BUILDING CODE (CGBC) PART 11, TITLE 24, CALIFORNIA CODE OF REGULATIONS (CCR)

STANDARD ABBREVIATIONS

- A -
A AMPERE
AB ABOVE BACK SPLASH
ADA AMERICANS W/DISABILITIES ACT
A.F.F. ABOVE FINISHED FLOOR
AF ARC FAULT
AHU AIR HANDLING UNIT
AMP FUSE
AFG ABOVE FINISHED GRADE
AIC AMPERE INTERRUPTING CAPACITY
AL ALUMINUM
ARCH'L ARCHITECTURAL AS AMP SWITCH
ATS AUTOMATIC TRANSFER SWITCH
AWG AMERICAN WIRE GAUGE

- B -
BC BARE COPPER
BLDG BUILDING BLDG

- C -
C CONDUIT
CAB CABINET
CAT CATALOG/CATEGORY
CB CIRCUIT BREAKER
CKT CIRCUIT
CLG CEILING
CO CONDUIT ONLY
CC COMM COMMUNICATION
CU COPPER
CTEP CALIFORNIA TYPE EVALUATION PROGRAM

- D -
DEMO,(D) DEMOLITION/DEMOLISH
DISC. DISCONNECT
DN DOWN
DWG DRAWING

- E -
EA EACH
EF EXHAUST FAN
EG EQUIPMENT GROUND
ELEC. ELECTRICAL
ELEV ELEVATOR
EM EMERGENCY
EMT ELECTRICAL METALLIC TUBING
EQUIP EQUIPMENT
(E) EXISTING TO REMAIN
EVCS ELECTRICAL VEHICLE CHARGING STATION

- F -
FBO FURNISHED BY OTHERS
FF FINISHED FLOOR
FIXT FIXTURE
FLA FULL LOAD AMPS
FLEX FLEXIBLE METALLIC CONDUIT(STEEL)
FLUOR FLUORESCENT
FT FEET OR FOOT

- G -
GFA GROUND FAULT ALARM
GFCI GROUND FAULT CIRCUIT INTERRUPTER
GND GROUND

- H -
HP HORSEPOWER
HVAC HEATING, VENTILATING & AIR CONDITIONING

- I -
IBC INTERNATIONAL BUILDING CODE
IMC INTERMEDIATE METAL CONDUIT
IN INCH(ES)
IRC INTERNATIONAL RESIDENTIAL CODE
ISC SHORT CIRCUIT AMPERES

- J -
JB, J-BOX JUNCTION BOX

- K -
KCMIL & MCM THOUSAND CIRCULAR MILS
KVA KILOVOLT AMPERE
KW KILOWATT

- L -
LTG LIGHTING
LRA LOCK RUNNING AMPS
LOTO LOCK OUT TAG OUT

- M -
MAX. MAXIMUM
MCA MAXIMUM CIRCUIT AMP
MCB MAIN CIRCUIT BREAKER
MCC MOTOR CONTROL CENTER
MECH. MECHANICAL
MIN. MINIMUM
MLO MAIN LUGS ONLY
MTD MOUNTED

- N -
NC NORMALLY CLOSED
NEC NATIONAL ELECTRICAL CODE
NECA NATIONAL ELECTRICAL CONTRACTOR'S ASSOCIATION
NEMA NATIONAL ELECTRICAL MANUFACTURERS ASSOCIATION
NEUT NEUTRAL
NFC NATIONAL FIRE CODE
NF NON-FUSIBLE
NFPA NATIONAL FIRE PROTECTION ASSOCIATION
NIC NOT IN CONTRACT
NO NORMALLY OPEN
NTS NOT TO SCALE

- O -
OCPD OVER CURRENT PROTECTION DEVICE

- P -
P POLE
PH PHASE
PNL PANEL
PV PHOTOVOLTAIC
PVC POLYVINYL CHLORIDE
PWR POWER

- Q -
QTY QUANTITY

- R -
(R) RELOCATE
RECEP RECEPTACLE
REQ'D REQUIRED
RGS RIGID GALVANIZED STEEL
RSC RIGID STEEL CONDUIT

- S -
SCHED SCHEDULE
SECT SECTION
SP SINGLE POLE
SN SOLID NEUTRAL
SPEC SPECIFICATION
SW SWITCH
SWBD SWITCHBOARD
SWGR SWITCH GEAR
SYS SYSTEM

- T -
TEMP TEMPORARY
TELE TELEPHONE
T-STAT THERMOSTAT
TTB TELEPHONE TERMINAL BACKBOARD
TTC TELEPHONE TERMINAL CABINET
TYP. TYPICAL

- U -
UBC UNIFORM BUILDING CODE
UL UNDERWRITERS LABORATORY
U.N.O. UNLESS NOTED OTHERWISE

- V -
V VOLT OR VOLTAGE
VA VOLT AMPERE
VD VOLTAGE DROP
VFD VARIABLE FREQUENCY DRIVE
VP VAPOR PROOF

- W -
W WATT, WIRE
WP WEATHERPROOF, NEMA 3R

- X -
XFMR TRANSFORMER

ENERGY CODE ACCEPTANCE TESTING

THE CALIFORNIA ENERGY CODE SECTION 10-103 REQUIRES ACCEPTANCE TESTING ON ALL NEWLY INSTALLED LIGHTING CONTROLS, MECHANICAL SYSTEMS, ENVELOPES, AND PROCESS EQUIPMENT AFTER INSTALLATION AND BEFORE PROJECT COMPLETION. AN ACCEPTANCE TEST IS A FUNCTIONAL PERFORMANCE TEST TO HELP ENSURE THAT NEWLY INSTALLED EQUIPMENT IS OPERATING AND IN COMPLIANCE WITH THE ENERGY CODE.

LIGHTING CONTROLS ACCEPTANCE TESTS MUST BE PERFORMED BY A CERTIFIED LIGHTING CONTROLS ACCEPTANCE TEST TECHNICIAN (ATT).

MECHANICAL SYSTEM ACCEPTANCE TESTS MUST BE PERFORMED BY A CERTIFIED MECHANICAL ATT FOR PROJECTS SUBMITTED ON OR AFTER OCTOBER 1, 2021.

A LISTING OF CERTIFIED ATT CAN BE FOUND AT HTTPS://WWW.ENERGY.CA.GOV/PROGRAMS-AND-TOPICS/PROGRAMS /ACCEPTANCE-TEST-TECHNICIAN-CERTIFICATION-PROVIDER-PROGRAM/ACCEPTANCE.

THE ACCEPTANCE TESTING PROCEDURES MUST BE REPEATED, AND DEFICIENCIES MUST BE CORRECTED BY THE BUILDER OR INSTALLING CONTRACTOR UNTIL THE CONSTRUCTION / INSTALLATION OF THE SPECIFIED SYSTEMS CONFORM AND PASS THE REQUIRED ACCEPTANCE CRITERIA.

PROJECT INSPECTORS WILL BE COLLECTING THE FORMS TO CONFIRM THAT THE REQUIRED ACCEPTANCE TESTS HAVE BEEN COMPLETED.

SCOPE OF WORK

SCOPE OF WORK:

PROVIDE POWER CONNECTION TO NEW DEAERATOR. DEMO EXISTING BOILER AND SURGE PUMP EQUIPMENT, PROVIDE TEMPORARY POWER TO TEMPORARY DEAERATOR SYSTEM WHILE NEW SYSTEM IS BEING INSTALLED.

SHEET INDEX

Sheet List Table

SHEET #	SHEET TITLE	SCALE
E-001	ELECTRICAL NOTES LEGEND AND ABBREVIATIONS	NO SCALE
E-002	SPECIFICATIONS	NO SCALE
E-003	SINGLE LINE DIAGRAM AND LOAD CALCS.	NO SCALE
E-101	ELECTRICAL FLOOR PLAN TEMPORARY WORK	1/4" = 1'-0"
E-102	ELECTRICAL FLOOR PLAN DEMOLITION	1/4" = 1'-0"
E-201	ELECTRICAL FLOOR PLAN	1/4" = 1'-0"
E-501	ELECTRICAL DETAILS	NO SCALE

NOT FOR BID

PLAN CHECK - NOT FOR CONSTRUCTION

APPROVAL

REVIEWED IN ACCORDANCE WITH THE REQUIREMENTS OF T24, CCR
APPROVED
Department of Health Care Access & Information
Office of Statewide Hospital Planning & Development
8/9/2023, 7:23:46 AM
S230562-36-00
Allen Cheng

CLIENT

SAN BERNARDINO COUNTY
PROJECT AND FACILITIES MANAGEMENT DEPARTMENT
385 NORTH ARROWHEAD AVENUE, 3RD FLOOR
SAN BERNARDINO, CA 92415-0184

PROJECT NAME

ARMC DEAERATOR #1 REPLACEMENT

PROJECT NO.
WBSE # 10.10.0847
CIP # 20-011
HCAi #
FACILITY NO.
17282
BUILDING NO.
BLD-00075 CENTRAL PLANT

400 N. PEPPER AVENUE
COLTON, CA 92324-1801

ENGINEER/ARCHITECT

IDS GROUP
1 PETERS CANYON ROAD, SUITE 130
IRVINE, CA. 92606
TEL: 949-387-8500, FAX: 949-387-0800

STAMP

REGISTERED PROFESSIONAL ENGINEER DARREN B. SMITH No. 30841 Exp. 12/31/24 MECHANICAL STATE OF CALIFORNIA

STAMP

REGISTERED PROFESSIONAL ENGINEER STEVEN M. COLLINS No. E22808 ELECTRICAL STATE OF CALIFORNIA
DATE SIGNED 04/18/23

ISSUE

REV.	DESCRIPTION	DATE
	HCAi SUBMITTAL	04/28/23
A	BACK CHECK #1	06/16/23
B	BACK CHECK #2	07/28/23

PROJECT IDENTIFICATION

THIS DRAWING WAS CREATED IN AUTODESK AUTOCAD V. 2021 UNLESS OTHERWISE NOTED.

THE ORIGINAL SIZE OF THIS SHEET IS 30" X 42"

THESE DRAWINGS AND SPECIFICATIONS ARE THE PROPERTY AND COPYRIGHT OF IDS GROUP AND SHALL NOT BE USED ON ANY OTHER PROJECT OR LOCATIONS EXCEPT AS DESCRIBED ON THE DRAWINGS, WITHOUT THE WRITTEN AGREEMENT WITH IDS GROUP.

IDS PROJECT NO.	22X066.02
DRAWN BY	AL
CHECKED BY	RP
APPROVED BY	MO

SHEET TITLE

ELECTRICAL NOTES LEGEND AND ABBREVIATIONS

SHEET NUMBER

E-001

SHEET NO. 1 OF

ELECTRICAL SPECIFICATIONS

A. MATERIALS

1. MATERIALS SHALL BE NEW AND OF QUALITY AS SPECIFIED ON THE PLANS OR SPECIFICATIONS AND MUST CARRY THE UNDERWRITER'S LABORATORIES APPROVAL COVERING THE PURPOSE FOR WHICH THEY ARE USED, IN ADDITION TO MEETING REQUIREMENTS OF THE CURRENT APPLICABLE CODES AND REGULATIONS.

B. CONDUIT

1. ALL WIRING SHALL BE INSTALLED IN LISTED METALLIC CONDUIT EXCEPT AS PERMITTED BELOW. RGS, WITH A 20 MIL PVC COATING WILL BE USED WHEN IN CONTACT WITH EARTH. IMC MAY BE USED IN INDOOR LOCATIONS NOT IN CONTACT WITH THE EARTH. EMT MAY BE USED IN INDOOR LOCATIONS NOT IN CONTACT WITH EARTH, NOT IN CONCRETE SLABS OR WALLS AND NOT SUBJECT TO DAMAGE. PVC MAY BE USED IN OR BELOW CONCRETE AND DIRECT BURIED IN EARTH. FLEXIBLE STEEL CONDUIT SHALL BE USED FOR INDOOR FINAL CONNECTIONS TO EQUIPMENT IN LENGTHS NOT TO EXCEED 72". LIQUID-TIGHT FLEXIBLE STEEL CONDUIT SHALL BE FOR OUTDOOR FINAL CONNECTIONS TO EQUIPMENT NOT TO EXCEED 36".

2. WHERE CONDUIT ENTERS OUTLET BOXES, FIXTURES OR CABINETS, FIRMLY FASTEN WITH STEEL SET SCREW, COMPRESSION CONNECTORS, OR DOUBLE LOCKNUTS FOR GRC. CONNECTIONS SHALL HAVE BUSHINGS OR INSULATED THROAT CONNECTORS. FIRMLY FASTEN CONDUIT TO THE BUILDING CONSTRUCTION. RUN EXPOSED CONDUIT PARALLEL TO THE BUILDING LINES. SUPPORTED BY APPROPRIATE HANGERS (UNISTRUT, T & B OR APPLETON, OR EQUAL).

3. COVER METALLIC CONDUIT IN CONTACT WITH EARTH WITH POLYETHYLENE TAPED SPIRAL WRAPPED, 1/2 LAPPED TO PROVIDE 20 MIL. THICKNESS. TAPE SHALL BE SCOTCH NO. 50 TAPE. CONDUIT AND DUCTS NOT UNDER BUILDINGS AND FEEDER DUCTS SHALL BE INSTALLED PER N.E.C. 300-5. MAKE JOINTS WITH COMPOUND TO BE WATERTIGHT.

4. FITTINGS AND CONDUIT BODIES SHALL BE STEEL. NO DIECAST FITTINGS.

5. CONDUIT SIZES SHALL BE AS REQUIRED BY CODE AND AS INDICATED OR SPECIFIED.

6. EMPTY CONDUIT SYSTEMS SHALL HAVE A NYLON PULL STRING TO FACILITATE INSTALLATION OF FUTURE WIRE.

7. SCHEDULE 40 PVC CONDUIT SHALL BE PERMITTED UNDERGROUND WITH PROPER FITTINGS, UL APPROVED AND CEMENTED JOINTS. PENETRATIONS THROUGH FLOOR SLABS AND BENDS GREATER THAN 22° SHALL BE WRAPPED RIGID GALVANIZED STEEL ELBOWS.

8. CONDUITS AND OUTLETS SHALL BE CONCEALED WITH THE BUILDING STRUCTURE, EXCEPT THAT CERTAIN MOTOR AND LIGHTING FEEDER CONDUITS MAY BE RUN EXPOSED IN CERTAIN AREAS AS INDICATED ON THE DRAWINGS. CONDUIT SHOWN TO BE INSTALLED IN CABINETS, COUNTERS, AND CASEWORK SHALL BE RUN AS DIRECTED BY THE ARCHITECT.

9. CONDUIT SYSTEMS SHALL HAVE A CODE SIZED COPPER GROUND CONDUCTOR INCREASE CONDUIT SIZE AS REQUIRED.

10. CONDUIT PENETRATION THROUGH ROOF SHALL HAVE ROOF FLASHING WITH CAULK TYPE COUNTER FLASHING SLEEVE. INSTALLATION SHALL BE WATERTIGHT.

11. CONDUITS SHALL BE ROUTED SURFACE ON THE STRUCTURE, PARALLEL AND PERPENDICULAR TO THE STRUCTURE.

C. OUTLET, PULL, AND JUNCTION BOXES

1. EACH SWITCH, LIGHT. RECEPTACLE OR OTHER OUTLET SHALL BE PROVIDED WITH A CODE GAUGE, GALVANIZED STEEL OUTLET BOX. JUNCTION AND PULL BOXES SHALL BE CODE GAUGE, GALVANIZED STEEL. OUTLET BOXES SHALL BE OF THE ONE PIECE, KNOCKOUT TYPE, IN GENERAL 4" SQUARE WITH PLASTER RING. PLASTER RINGS SHALL BE SET TO PROVIDE NOT MORE THAN 1/8" FROM WALL SURFACE TO RING. IN NO CASE SHALL PLASTER RING PROJECT BEYOND SURFACE OF WALL. SINGLE GANG RINGS SIMILAR TO STEEL CITY 52050 SHALL BE USED FOR 4" BOXES IN UNFINISHED BRICK NUMBER 180 BOXES MAY BE USED FOR UNFINISHED MASONRY FLUSH WALL OUTLETS. CENTER OUTLET BOXES IN BLOCK COURSE.

2. BOXES INSTALLED IN POURED CEMENT FLOORS SHALL BE FLUSH TYPE CAST IRON OR STEEL WITH WATERTIGHT GASKETED COVERS. WHERE BOXES ARE INSTALLED IN FLOORS WITH TILE OR CARPET FLOOR COVERING, COVERS SHALL BE OF THE RECESSED TYPE TO ACCOMMODATE THE FLOOR COVERING.

3. BOXES INSTALLED FOR THE ALARM, COMPUTER, AND SECURITY SYSTEM SHALL BE PROVIDED WITH APPROPRIATE COVER PLATES.

4. BOXES FOR TELEPHONE, COMPUTER, T.V., FIRE ALARM, SECURITY, AND SIMILAR SYSTEMS SHALL BE MINIMUM 4" SQUARE AND 2-1/8" DEEP.

D. SWITCHBOARDS

1. SWITCHBOARDS SHALL BE PROVIDED WITH FULLY RATED COPPER OR ALUMINUM BUS. HORIZONTAL TAPERED BUSSING SHALL NOT BE ALLOWED.

2. ACCEPTABLE MANUFACTURERS - CUTLER HAMMER, SEIMENS, SQUARE D OR APPROVED EQUAL.

3. FACTORY ASSEMBLED DEAD FRONT, METAL ENCLOSED, AND SELF-SUPPORTING SWITCHBOARD ASSEMBLY CONFORMING TO NEMA PB 2, AND UL 891, AND COMPLETE FROM INCOMING LINE TERMINALS TO LOAD SIDE TERMINATIONS.

4. LINE AND LOAD TERMINATIONS: ACCESSIBLE FROM THE FRONT ONLY OF THE SWITCHBOARD. SUITABLE FOR THE CONDUCTOR MATERIALS AND NUMBER OF CONDUCTORS USED.

5. BUS CONNECTIONS: BOLTED. ACCESSIBLE FROM FRONT FOR MAINTENANCE. PROVIDE BELLEVILLE WASHERS FOR AND PROPERLY TORQUE CONNECTIONS.

6. PROVIDE FULLY-RATED NEUTRAL BUS AND FULLY RATED GROUND BUS MATCHING MATERIAL USED FOR MAIN BUS.

7. FUTURE PROVISIONS: FULLY EQUIP SPACES FOR FUTURE DEVICES WITH BUSSING AND BUS CONNECTIONS. SUITABLY INSULATED AND BRACED FOR SHORT CIRCUIT CURRENTS. CONTINUOUS CURRENT RATING AS INDICATED ON DRAWINGS.

E. PANEL BOARDS

1. CIRCUIT BREAKER TYPE AS INDICATED ON DRAWINGS. UNLESS INDICATED OTHERWISE, PANELS SHALL HAVE PANEL BOARD TYPE CONSTRUCTION WITH BOLT-ON CIRCUIT BREAKERS FOR 30 PANELS. MANUFACTURERS SHALL BE GENERAL ELECTRIC, SQUARE D, SIEMENS, CUTLER-HAMMER OR EQUAL WITH VOLTAGE, SIZES, AND RATINGS AS INDICATED ON DRAWINGS.

2. THE CIRCUIT BREAKERS SHALL BE OPERABLE IN ANY POSITION AND BE REMOVABLE FROM THE FRONT OF THE PANEL BOARD WITHOUT DISTURBING THE ADJACENT UNITS. BRANCH BREAKERS SHALL BE OF SUCH DESIGN THAT COMBINATION OF SINGLE-POLE, DOUBLE-POLE, AND THREE-POLE BREAKERS CAN BE ASSEMBLED ON THE SAME PANEL. EACH BRANCH CIRCUIT SHALL BE CLEARLY NUMBERED. BRANCH AND MAIN TERMINALS SHALL BE OF THE SOLDERLESS TYPE. HANDLE TIES TO FORM MULTI-POLE BREAKERS NOT ACCEPTABLE.

3. WIRE TERMINATION FOR PANEL BOARDS AND CIRCUIT BREAKERS SHALL BE LISTED AS SUITABLE FOR 75 DEGREES C.

4. PROVIDE A TYPEWRITTEN CIRCUIT INDEX BEHIND CLEAR PLASTIC COVER ON INSIDE OF DOOR. INFORMATION SHALL INCLUDE ROOM AND TYPE LOAD SERVED. CIRCUIT BREAKERS SHALL BE IDENTIFIED, INCLUDING SPARES. INDEX CARD FRAME SHALL BE METAL, SECURED TO DOOR.

5. WHERE PANEL BOARDS ARE INSTALLED FLUSH WITH THE WALLS, EXTEND EMPTY CONDUITS FORM THE PANEL BOARD TO AN ACCESSIBLE SPACE ABOVE OR BELOW. PROVIDE 3/4" (MINIMUM SIZE) CONDUIT FOR EVERY THREE SINGLE SPARE CIRCUIT BREAKERS OR SPACE OR EQUIVALENT MULTI-POLE ARRANGEMENT, OR FRACTION THEREOF, BUT NOT LESS THAN TWO CONDUITS FOR EACH PANEL.

6. PANEL BOARDS TO BE PROVIDED WITH COPPER BUSSING ONLY.

7. LOAD CENTERS SHALL NOT BE ALLOWED UNLESS NOTED OTHERWISE.

8. NEW PANELBOARDS SHALL COMPLY WITH NEC ARTICLE 110.16. EQUIPMENT MANUFACTURERS SHALL PROVIDE WARNING LABELS FOR PANELBOARDS, GENERATORS, AUTOMATIC TRANSFER SWITCHES TO WARN QUALIFIED PERSONS OF POTENTIAL ELECTRIC ARC FLASH HAZARDS. THE MARKING SHALL BE LOCATED SO AS TO BE CLEARLY VISIBLE TO QUALIFIED PERSONS BEFORE EXAMINATION, ADJUSTMENT, SERVICE, OR MAINTENANCE OF THE EQUIPMENT.

F. WIRE

1. CONDUCTOR SIZES SHOWN ON THE DRAWINGS ARE BASED ON COPPER WIRE. UNLESS OTHERWISE SPECIFIED, WIRE SHALL BE TYPE XHHW FOR FEEDERS OR BRANCH CIRCUITS LARGER THAN 4 AWG, TYPE THHN/THWN INSULATION FOR FEEDERS AND BRANCH CIRCUITS 4 AWG AND SMALLER. BRANCH CIRCUIT WIRING SHALL BE COPPER. SERVICE AND PANEL FEEDERS #1/0 AND LARGER MAY BE ALUMINUM. PROVIDED THE CONDUCTOR SIZES ARE INCREASED FOR EQUAL OR GREATER AMPACITY AND EQUAL OR LESS EQUIVALENT VOLTAGE DROP. INCREASE CONDUIT SIZE AS REQUIRED. THE WIRES SHALL BE MARKED WITH COLOR TO SIMPLIFY CIRCUIT IDENTIFICATION. UNLESS OTHERWISE REQUIRED BY LOCAL ORDINANCES GROUND WIRES SHALL BE GREEN, NEUTRAL WIRES SHALL BE 120V- WHITE, 277V- GRAY, AND LIVE WIRES 208Y/120V AND 120/240 SHALL BE BLACK (PHASE A), RED (PHASE B), AND BLUE (PHASE C). FOR 480Y/277V CIRCUITS, THE COLOR CODE SHALL BE BROWN (PHASE A), ORANGE (PHASE B), AND YELLOW (PHASE C). THE WIRE SHALL BE 12 AWG UNLESS OTHERWISE INDICATED. CIRCUIT SHALL BE LABELED IN EACH J-BOX.

2. WHERE ALUMINUM WIRE IS USED, ALUMINUM CONDUCTOR MATERIAL SHALL COMPLY WITH N.E.C. 310-14 AND CONNECTIONS AND TERMINATIONS SHALL BE MACHINE COMPRESSION TYPE EQUAL TO BURNDY "HI PLUG" OR "MACADAPT", NO EXCEPTIONS.

3. NO WIRE SHALL BE INSTALLED IN THE CONDUIT SYSTEM UNTIL THE CONDUIT SYSTEM IS COMPLETE. USE MINERALAC NO. 100 OR EQUIVALENT AS A LUBRICANT TO FACILITATE THE INSTALLATION OF THE CONDUCTORS IN THE CONDUIT SYSTEM.

4. SPLICES IN EXTERIOR PULL BOXES AND MANHOLES SHALL BE WEATHERPROOF USING "SCOTCHCAST" SPLICE KIT OR APPROVED EQUAL. SEAL ENDS OF CONDUITS AND DUCTS WITH "DUCTSEAL" OR APPROVED EQUAL.

5. PROVIDE SOLID CONDUCTOR FOR 12 AWG AND SMALLER.

G. WIRING DEVICES

1. WALL SWITCHES SHALL BE SPECIFICATION GRADE AC SILENT TYPE SWITCHES, 20A, 120/277 VOLT.

2. RECEPTACLES SHALL BE SPECIFICATION GRADE, DUPLEX TYPE, NEMA 5-20R, 20 AMPERE, 120 VOLT GROUNDED TYPE. SPECIAL APPLICATION RECEPTACLES SHALL BE INDICATED ON PLANS. MOUNT WITH THE GROUND DOWN.

3. DEVICE PLATES SHALL BE EQUAL TO SIERRA SMOOTH-LINE PLASTIC WALL PLATES. COLOR SHALL BE WHITE, UNLESS OTHERWISE NOTED.

4. RECEPTACLES IN OUTDOOR AND WET LOCATIONS SHALL BE INSTALLED WITH A HINGED OUTLET COVER/ENCLOSURE CLEARLY MARKED AND U.L. LISTED SUITABLE FOR WET LOCATIONS WHILE IN USE, EQUAL TO TAYMAC SPECIFICATION GRADE.

H.

I. LIGHTING FIXTURES

1. PROVIDE ALL LIGHTING FIXTURES, WIRED AND CONNECTED. THE DRAWINGS INDICATE THE FIXTURES FOR EACH LOCATION. PROVIDE LAMPS FOR FIXTURES. THE LAMPS SHALL BE BY THE SAME MANUFACTURER. VERIFY CEILING CONSTRUCTION BEFORE ORDERING RECESSED UNITS. PROVIDE PLASTER FRAMES AND HANGERS AS REQUIRED. CEILING CONSTRUCTION, ARCHITECTURAL ACCESSORIES, VOLTAGE, AND BALLASTS TO MEET THE EXISTING CONDITION.

J. SERVICE ENTRANCE SECTION

1. THE SERVICE ENTRANCE EQUIPMENT SHALL BE AS INDICATED ON THE DRAWINGS. EQUIPMENT SHALL CARRY THE U.L. LABEL AND SHALL CONFORM TO THE POWER COMPANY REGULATIONS.

2. SERVICE ENTRANCE EQUIPMENT SHALL BE PROVIDED WITH A FULLY RATED COPPER OR ALUMINUM BUS. HORIZONTALLY TAPERED BUSSING SHALL NOT BE ALLOWED.

K. SYSTEM GROUNDING

1. GROUNDING SHALL COMPLY WITH REQUIREMENTS OF ARTICLE 250. EXPOSED NONCURRENT CARRYING METALLIC PARTS OF ELECTRICAL EQUIPMENT, METALLIC RACEWAY SYSTEMS, METALLIC CABLE ARMOR, GROUNDING CONDUCTOR OF NONMETALLIC SHEATHED CABLES, GROUNDING CONDUCTOR IN NONMETALLIC RACEWAYS, AND GROUNDED CONDUCTORS OF THE WIRING SYSTEM SHALL BE GROUNDED.

2. GROUNDING CONDUCTOR (NEUTRAL) OF THE WIRING SYSTEM SHALL BE CONNECTED TO THE SYSTEM GROUNDING CONDUCTOR AT A SINGLE PLACE IN EACH SYSTEM BY REMOVABLE BONDING JUMPERS, SIZED ACCORDING TO THE APPLICABLE PROVISIONS OF THE NATIONAL ELECTRICAL CODE. THE GROUNDED CONDUCTOR (NEUTRAL) TO THE GROUNDING CONDUCTOR CONNECTION SHALL BE LOCATED IN THE ENCLOSURE FOR THE SYSTEM'S OVERCURRENT PROTECTION OR WHERE OTHERWISE INDICATED ON THE PLANS OR SPECIFICATIONS.

3. A GROUND BUS SEPARATE FROM THE NEUTRAL BUS SHALL BE PROVIDED IN ALL SWITCHBOARDS AND PANELBOARDS. GROUND BUS SHALL BE RETORQUED (CHECKED) PRIOR TO ENERGIZING EQUIPMENT PER MANUFACTURER'S RECOMMENDATIONS.

4. GROUND BUSES AND NEUTRAL BUSES IN DISTRIBUTION PANELS, SWITCHBOARDS, PANELBOARDS, AND THOSE PROVIDED IN ANY EQUIPMENT SHALL BE ISOLATED EXCEPT WHERE REQUIRED TO BE CONNECTED AS SPECIFIED ABOVE FOR THE SERVICE ENTRANCE AND IN TRANSFORMER TERMINAL COMPARTMENTS.

5. WHEN INDICATED ON THE DRAWINGS, EQUIPMENT GROUNDING CONDUCTORS SHALL BE EXTENDED FROM THE GROUND BUS IN THE DISTRIBUTION EQUIPMENT TO THE RECEPTACLE, FIXTURE OR DEVICE LUGS WHERE THEY ARE PROVIDED. WHERE LUGS ARE NOT PROVIDED, EQUIPMENT GROUNDING CONDUCTORS SHALL BE CONNECTED TO EQUIPMENT ENCLOSURES. THE CONNECTIONS SHALL BE ARRANGED SUCH THAT REMOVAL OF THE RECEPTACLE, EQUIPMENT GROUND CONDUCTORS, OR GROUND JUMPERS FROM GROUND BUSING SHALL NOT AFFECT THE GROUND SYSTEM.

6. RACEWAYS MAY NOT BE USED AS A GROUNDING CONDUCTOR FOR POWER AND LIGHTING CIRCUITS. CONDUIT SHALL HAVE SEPARATE CODE SIZED GREEN GROUND WIRE INSTALLED IN THE CONDUIT TO INSURE A CONTINUOUS GROUNDING PATH.

7. IN INACCESSIBLE LOCATIONS, MAKE CONNECTIONS BY EXOTHERMIC WELD PROCESS.

8. IN ACCESSIBLE LOCATIONS, CONNECTIONS SHALL BE MADE WITH BOLTED THROUGH, APPROVED SOLDERLESS BRONZE GROUNDING DEVICES.

9. BOND TOGETHER METAL SIDING NOT ATTACHED TO GROUNDED STRUCTURE BOND TO GROUND.

L. TELEPHONE SYSTEM

1. TELEPHONE WALL OUTLETS SHALL CONSIST OF STANDARD BOXES MOUNTED 18" ABOVE THE FLOOR UNLESS OTHERWISE INDICATED. CONNECT OUTLETS TO TELEPHONE TERMINAL WITH SEPARATE 3/4" CONDUIT UNLESS OTHERWISE SHOWN ON DRAWINGS. PROVIDE A TERMINAL MOUNTING BOARD FOR THE INCOMING SERVICE CABLE.

M. LIGHTING CONTROL

1. FURNISH AND INSTALL TIME SWITCHES, PHOTOCELLS, CONTACTORS AND FULL LIGHTING CONTROL SYSTEMS AS REQUIRED FOR LIGHTING CONTROLS INDICATED ON THE DRAWINGS.

2. TIME SWITCHES SHALL BE EQUAL TO PARAGON, GENERAL ELECTRIC, TORK, OR INTERMATIC AND SHALL HAVE SIZE AND NUMBER OF POLES AS REQUIRED.

3. PHOTOCELLS SHALL BE EQUAL TO TORK OR INTERMATIC WITH VOLTAGE AS INDICATED.

N. DRY TYPE TRANSFORMERS

1. MANUFACTURERS: SUBJECT TO COMPLIANCE WITH REQUIREMENTS, PROVIDE PRODUCTS BY ONE OF THE FOLLOWING

a. ACME ELECTRIC CORPORATION, POWER DISTRIBUTION PRODUCTS DIVISION.
b. GE ELECTRICAL DISTRIBUTION & CONTROL.
c. CUTLER-HAMMER.
d. SQUARE D/GROUPE SCHNEIDER NA.

2. CONTINUOUS WINDINGS WITHOUT SPLICES, EXCEPT FOR TAPS.

a. INTERNAL COIL CONNECTIONS - BRAZED OR PRESSURE TYPE.
b. COIL MATERIAL - COPPER

3. ENCLOSURE - VENTILATED, NEMA 250, TYPE 2 (NEMA 3R FOR OUTDOOR INSTALLATIONS).

4. INSULATION CLASS - 220 DEG C, UL-COMPONENT-RECOGNIZED INSULATION SYSTEM WITH A MAXIMUM OF 150 DEG C RISE ABOVE 40 DEG C AMBIENT TEMPERATURE.

5. TAPS FOR TRANSFORMERS 25 KVA AND LARGER - TWO 2.5 PERCENT TAPS ABOVE AND FOUR 2.5 PERCENT TAPS BELOW NORMAL FULL CAPACITY.

6. WALL BRACKETS - MANUFACTURER'S STANDARD BRACKETS.

7. LOW-SOUND-LEVEL-REQUIREMENTS - MINIMUM OF 3 DBA LESS THAN NEMA ST 20 STANDARD SOUND LEVELS WHEN FACTORY TESTED ACCORDING TO IEEE C57.12.91.

O. GUARANTEE

1. GUARANTEE MATERIAL FURNISHED AND WORKMANSHIP PERFORMED FOR A PERIOD OF ONE YEAR FROM DATE OF FINAL ACCEPTANCE OF WORK. ANY DEFECTS DEVELOPING WITHIN THIS PERIOD, TRACEABLE TO MATERIAL FURNISHED AS A PART OF THIS SECTION OR WORKMANSHIP PERFORMED HEREUNDER, SHALL BE MADE GOOD AT NO EXPENSE TO THE OWNER.

P. SHOP DRAWINGS AND APPROVALS

1. THE ITEMS SPECIFIED HEREIN AND ON DRAWINGS ARE USED AS A STANDARD OF QUALITY. ANY MATERIALS OF EQUAL QUALITY AND AESTHETIC VALUE WILL BE GIVEN CONSIDERATION AS A SUBSTITUTE FOR THE MATERIALS SPECIFIED. NO APPROVAL WILL BE GIVEN TO A SPECIFIC CATALOG NUMBER, MODEL, OR TYPE OF EQUIPMENT, PRIOR TO BIDDING. AFTER BIDDING, THE DECISION OF THE ARCHITECT AND/OR ENGINEER DETERMINING EQUAL MATERIALS WILL BE FINAL.

2. THE CONTRACTOR SHALL SUBMIT SEVEN (7) IDENTICAL BOUND SETS OF SHOP DRAWINGS ON THE FOLLOWING ITEMS:

a. LIGHTING FIXTURE CUTS AND PERFORMANCE DATA.
b. OUTLINE DRAWINGS AND DATA SHEETS OF EACH PANELBOARD AND SWITCHBOARD.
c. OUTLINE DRAWINGS OF ALL SWITCHGEAR.

3. SUBMIT ITEMS AT ONE TIME IN A NEAT AND ORDERLY MANNER WITHIN 15 DAYS OF AWARD OF CONTRACT. PARTIAL SUBMITTALS WILL NOT BE ACCEPTABLE.

Q. RECORD AND AS-BUILT DRAWINGS

1. THE ELECTRICAL CONTRACTOR SHALL MAINTAIN A SET OF DRAWINGS AT THE JOB SITE FOR THE EXCLUSIVE PURPOSE OF MAINTAINING A RECORD OF WORK INSTALLED AND TO SHOW ANY DEVIATIONS FROM THE WORK INDICATED ON THE DRAWINGS.

2. AT THE COMPLETION OF THE PROJECT, ONE SET OF REPRODUCIBLE DRAWINGS, SHOWING AS-BUILT CONDITIONS, SHALL BE DELIVERED TO THE OWNER FOR ACCEPTANCE PRIOR TO FINAL PAYMENT.

R. COORDINATION STUDY & ARC FLASH REQUIREMENTS

1. THE ELECTRICAL CONTRACTOR MUST HIRE AN INDEPENDENT THIRD PARTY TO PERFORM A COORDINATION STUDY FOR THIS SCOPE OF WORK TO MEET HCAI PIN 70 REQUIREMENTS. THE COORDINATION STUDY SHALL BE PERFORMED BEFORE THE ENGINEER HAS APPROVED THE SHOP DRAWINGS AND A MANUFACTURE HAS BEEN SELECTED. THE STUDY MUST BE PRESENTED TO THE ENGINEER AND OWNER FOR REVIEW TO ENSURE THE ENTIRE ELECTRICAL SYSTEM IS PROPERLY COORDINATED.

2. ARC FLASH REQUIREMENTS:

a. PROVIDE AN ARC FLASH EVALUATION FOR THE NEW ELECTRICAL EQUIPMENT. PERFORM ALL CALCULATIONS AND WORK WITH COMMERCIALLY AVAILABLE COMPUTER SOFTWARE IN ACCORDANCE WITH IEEE STD. 1584-2002 IEEE GUIDE FOR PERFORMING ARC-FLASH HAZARD CALCULATIONS, NFPA 70-2009 (NEC), AND NFPA 70E-2009 STANDARD FOR ELECTRICAL SAFETY IN THE WORKPLACE.
b. WHERE THE CALCULATIONS DETERMINE THAT THE SETTINGS RESULT IN PROHIBITIVE INCIDENT ENERGY LEVELS (>40 CAL/CM2) THE CONTRACTOR SHALL PROVIDE RECOMMENDED SETTINGS OR OTHER MITIGATION RECOMMENDATIONS TO REDUCE THE INCIDENT ENERGY TO A LEVEL WHERE ENERGIZED WORK IS CAPABLE OF BEING PERFORMED. THE CONTRACTOR SHALL DOCUMENT THE RECOMMENDED CHANGES AND PROVIDED TIME CURRENT CURVES INDICATING THE COORDINATION THAT REFLECTS THE RECOMMENDED SETTINGS.
c. PROVIDE LABELS FOR EACH ELECTRICAL ENCLOSURE OR EQUIPMENT WHERE WORKERS COULD BE EXPOSED TO ENERGIZED CONDUCTORS. THESE LABELS SHALL COMPLY WITH THE REQUIREMENTS OF NFPA 70E-2009 AND INCLUDE BUT NOT LIMITED TO:

1. VOLTAGE PHASE TO PHASE
2. FLASH PROTECTION BOUNDARY (INCHES)
3. INCIDENT ENERGY AT THE WORKING DISTANCE(CAL/CM2)
4. PPE CLASS AND DESCRIPTION (INCLUDING GLOVE RATING)
5. RESTRICTED APPROACH BOUNDARY (INCHES)
6. LIMITED SHOCK PPROACH BOUNDARY (INCHES)
7. PROHIBITED SHOCK APPROACH BOUNDARY (INCHES)
8. LOCATION IDENTIFICATION

NOT FOR CONSTRUCTION

APPROVAL

REVIEWED IN ACCORDANCE WITH THE REQUIREMENTS OF T24, CCR
APPROVED
Department of Health Care Access & Information
Office of Statewide Hospital Planning & Development
8/9/2023, 7:23:46 AM
S230562-36-00
Allen Cheng

CLIENT

SAN BERNARDINO COUNTY

SAN BERNANDINO COUNTY
PROJECT AND FACILITIES
MANAGEMENT DEPARTMENT

385 NORTH ARROWHEAD AVENUE, 3RD FLOOR
SAN BERNARDINO, CA 92415-0184

PROJECT NAME

ARMC DEAERATOR #1 REPLACEMENT

PROJECT NO.
WBSE # 10.10.0847
CIP # 20-011
HCAI #

FACILITY NO.
17282

BUILDING NO.
BLD-00075 CENTRAL PLANT

400 N. PEPPER AVENUE
COLTON, CA 92324-1801

ENGINEER/ARCHITECT

IDS

IDS GROUP

1 PETERS CANYON ROAD, SUITE 130
IRVINE, CA. 92606
TEL: 949-387-8500, FAX: 949-387-0800

STAMP

REGISTERED PROFESSIONAL ENGINEER
DARREN B. PARTLOW
No. 30841
Exp. 12/31/24
MECHANICAL
STATE OF CALIFORNIA

STAMP

REGISTERED PROFESSIONAL ENGINEER
STEVEN M. COLLINS
No. E22809
ELECTRICAL
STATE OF CALIFORNIA

DATE SIGNED 04/18/23

ISSUE

REV.	DESCRIPTION	DATE
	HCAI SUBMITTAL	04/28/23
A	BACK CHECK #1	06/16/23
B	BACK CHECK #2	07/28/23

PROJECT IDENTIFICATION

THIS DRAWING WAS CREATED IN AUTODESK AUTOCAD V. 2021 UNLESS OTHERWISE NOTED.

THE ORIGINAL SIZE OF THIS SHEET IS 30" X 42"

THESE DRAWINGS AND SPECIFICATIONS ARE THE PROPERTY AND COPYRIGHT OF IDS GROUP AND SHALL NOT BE USED ON ANY OTHER PROJECT OR LOCATIONS EXCEPT AS DESCRIBED ON THE DRAWINGS, WITHOUT THE WRITTEN AGREEMENT WITH IDS GROUP.

IDS PROJECT NO.	22X066.02
DRAWN BY	AL
CHECKED BY	RP
APPROVED BY	MO

SHEET TITLE

SPECIFICATIONS

SHEET NUMBER

E-002

SHEET NO. 2 OF

IDS GROUP - FILE LOCATION: S:\PROJECTS\2022\SHARED\22X066.02 ARMC - REPLACEMENT DEAERATOR 1\05 CAD\05 ELEC\22X06602_E002_SPECS PLOT DATE: 7/24/2023 2:27:20 PM USER: MANNY.OCAMPO

EXISTING MOTOR CONTROL CENTER CP-EMCC2 - FEEDER SCHEDULE AND CALCULATIONS

LOAD								FEEDERS									VOLTAGE DROP CALCULATIONS				AFC CALCULATIONS		
NAME	PF	VOLTS	Ø	CONNECTED HP	CONNECTED KVA	DEMAND KVA	DEMAND AMPS	#	CONDUITS #	CONDUITS SIZE	WIRE PER CONDUIT #	WIRE PER CONDUIT SIZE	GND PER CONDUIT SIZE	EST. DIST.	REMARKS	FEEDER SEGMENT DROP ONLY VOLTS DROP	FEEDER SEGMENT DROP ONLY %	NET DROP AT DEVICE VOLTS DROP	NET DROP AT DEVICE %	AFC FROM SOURCE	MOTOR CONTRI-BUTION	NET AFC AT DEVICE
(E) LOAD ANALYSIS		480	3			184	221													40,000	648	**40,648**
SECTION 1 - 1200AMP																						
(E) HHWP-7	1.00	480	3					F01														
(E) CIR-5	1.00	480	3					F02														
(E) CIR-6	1.00	480	3					F03														
(E) CIR-7	1.00	480	3					F04														
(E) CIR-8	1.00	480	3					F05														
SECTION 2 - 600AMP																						
(E) CIR-9	1.00	480	3					F06														
(E) CIR-10	1.00	480	3					F07														
(E) SPARE								F08														
(E) DE-1	1.00	480	3					F09														
(E) DE-2	1.00	480	3					F010														
(D) MDFP-1	1.00	480	3			6	8	F011	1	3/4"	3	#12	#14	120		2.69	0.6%	2.69	0.6%	40,648		**1,377**
(E) HHWP-3	1.00	480	3					F012														
SECTION 3 - 800AMP																						
(E) CRT-SA	1.00	480	3					F013														
(D) MBFP-1	1.00	480	3			43	52	F014	1	1 1/4"	3	#3	#8	130		2.81	0.6%	2.81	0.6%	40,648		**8,120**
(D) MBFP-2	1.00	480	3			43	52	F015	1	1 1/4"	3	#3	#8	130		2.81	0.6%	2.81	0.6%	40,648		**8,120**
(E) HHWP-2	1.00	480	3					F016														
SECTION 4 - 600AMP																						
(E) CRT-SB	1.00	480	3					F017														
(D) MDFP-2	1.00	480	3			6	8	F018	1	3/4"	3	#12	#14	120		2.69	0.6%	2.69	0.6%	40,648		**1,377**
(E) B-1	1.00	480	3					F019														
(E) B-2	1.00	480	3					F020														
(E) HHWP-1	1.00	480	3					F021														
SECTION 5 - 300AMP																						
(E) B-3	1.00	480	3					F022														
(E) SPARE	1.00	480	3					F023														
(D) MBFP-3 (STANDBY)	1.00	480	3			43	52	F024	1	1 1/4"	3	#3	#8	130		2.81	0.6%	2.81	0.6%	40,648		**8,120**
(E) SPACE	1.00	480	3					F025														
(E) TEMP AIR COMPRESSOR	1.00	480	3			42	50	F026	1	1 1/2"	3	#2	#8	180		3.12	0.6%	3.12	0.6%	40,648		**7,431**

NEW MOTOR CONTROL CENTER CP-EMCC2 - FEEDER SCHEDULE AND CALCULATIONS

LOAD								FEEDERS									VOLTAGE DROP CALCULATIONS				AFC CALCULATIONS		
NAME	PF	VOLTS	Ø	CONNECTED HP	CONNECTED KVA	DEMAND KVA	DEMAND AMPS	#	CONDUITS #	CONDUITS SIZE	WIRE PER CONDUIT #	WIRE PER CONDUIT SIZE	GND PER CONDUIT SIZE	EST. DIST.	REMARKS	FEEDER SEGMENT DROP ONLY VOLTS DROP	FEEDER SEGMENT DROP ONLY %	NET DROP AT DEVICE VOLTS DROP	NET DROP AT DEVICE %	AFC FROM SOURCE	MOTOR CONTRI-BUTION	NET AFC AT DEVICE
(N) LOAD ANALYSIS		480	3			184	221													40,000	648	**40,648**
SECTION 1 - 1200AMP																						
(E) HHWP-7	1.00	480	3					F01														
(E) CIR-5	1.00	480	3					F02														
(E) CIR-6	1.00	480	3					F03														
(E) CIR-7	1.00	480	3					F04														
(E) CIR-8	1.00	480	3					F05														
SECTION 2 - 600AMP																						
(E) CIR-9	1.00	480	3					F06														
(E) CIR-10	1.00	480	3					F07														
(E) SPARE								F08														
(E) DE-1	1.00	480	3					F09														
(E) DE-2	1.00	480	3					F010														
(E) SPARE	1.00	480	3					F011														
(E) HHWP-3	1.00	480	3					F012														
SECTION 3 - 800AMP																						
(E) CRT-SA	1.00	480	3					F013														
(N) DA/ST-1	1.00	480	3			142	171	F014	1	2 1/2"	3	4/0	#6	130		3.08	0.6%	3.08	0.6%	40,648		**17,952**
(N) SPARE	1.00	480	3					F015														
(E) HHWP-2	1.00	480	3					F016														
SECTION 4 - 600AMP																						
(E) CRT-SB	1.00	480	3					F017														
(E) SPARE	1.00	480	3					F018														
(E) B-1	1.00	480	3					F019														
(E) B-2	1.00	480	3					F020														
(E) HHWP-1	1.00	480	3					F021														
SECTION 5 - 300AMP																						
(E) B-3	1.00	480	3					F022														
(E) SPARE	1.00	480	3					F023														
(E) SPARE	1.00	480	3					F024														
(E) SPACE	1.00	480	3					F025														
(N) TEMP-1	1.00	480	3			42	50	F026	1	1 1/2"	3	#2	#8	180		3.12	0.6%	3.12	0.6%	40,648		**7,431**

(N) 225A/3P, CKT. BKR., 42KAIC

(N) 70A/3P CKT. BKR., 42KAIC

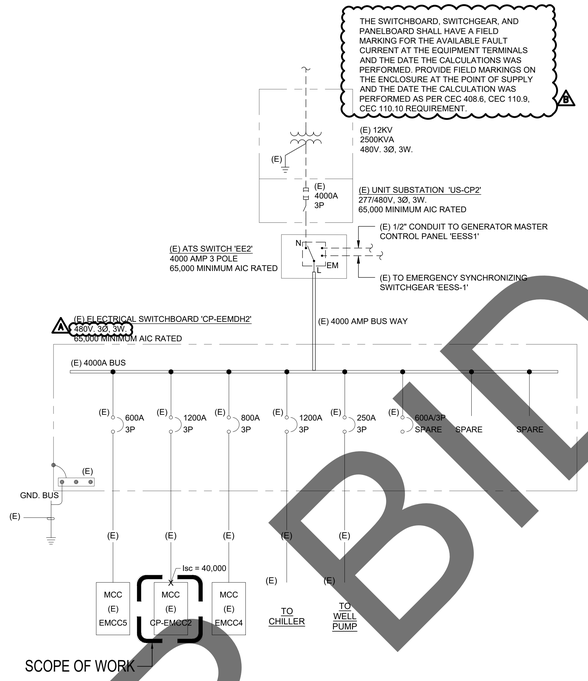

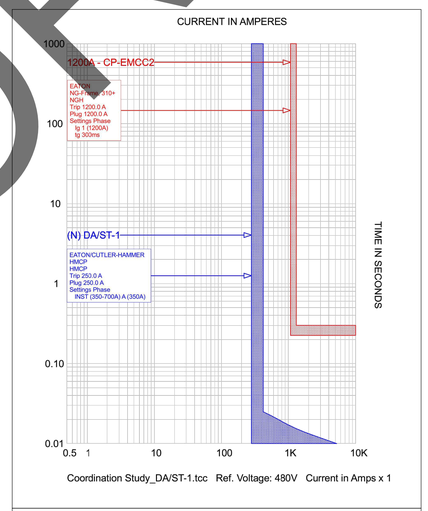

Coordination Study_DA/ST-1.tcc Ref. Voltage: 480V Current in Amps x 1

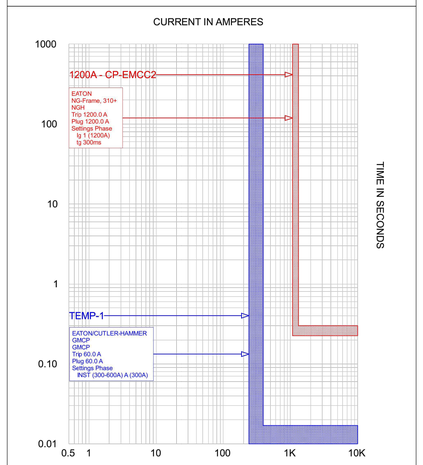

Coordination Study_TEMP-1.tcc Ref. Voltage: 480V Current in Amps x 1

THE ESSENTIAL ELECTRICAL SYSTEM HAS BEEN EVALUATED FOR COORDINATION AND THE ESSENTIAL ELECTRICAL SYSTEM WILL MEET THE COORDINATION REQUIREMENTS OF THE CEC ARTICLE 517.

SIGNATURE:

STEVEN M. COLLINS - ELECTRICAL ENGINEER OF RECORD
P.E. #E22808; EXPIRATION 06-30-2023

EXISTING SINGLE LINE DIAGRAM | NO SCALE | 1

SINGLE LINE GENERAL NOTES

1. THE DESIGN PROFESSIONAL HAS PERFORMED REQUIRED SHORT CIRCUIT CALCULATIONS AND THE AIC RATING INDICATED FOR EACH DEVICE IS ADEQUATE TO PROTECT THE EQUIPMENT AND THE ELECTRICAL SYSTEM.
2. THE DESIGN PROFESSIONAL HAS PERFORMED ALL REQUIRED VOLTAGE DROP CALCULATIONS AND BRANCH CIRCUITS AND FEEDERS COMPLY WITH NEC 210-19(A) FPN NO. 4.
3. FAULT CURRENT CALCULATIONS ASSUME UTILITY PROVIDED ____KVA UTILITY TRANSFORMER WITH ____A OF AVAILABLE FAULT CURRENT LOCATED __ FEET FROM MAIN SWITCHBOARD. REFER TO POWER UTILITY DRAWINGS FOR EXACT SIZE AND LOCATION. NOTIFY ENGINEER IN WRITING IF TRANSFORMER SIZE IS INCREASED OR DISTANCE IS DECREASED.
4. EACH SERVICE DISCONNECTING MEANS, AND THE EXTERIOR DOOR PROVIDING ACCESS TO THE DISCONNECTING MEANS, LOCATED IN AN APPROVED ELECTRICAL ROOM, SHALL BE PERMANENTLY MARKED WITH A 1 FOOT SQUARE YELLOW SIGN WITH 1" HIGH X 1/4" STROKE BLACK LETTERING OR NUMBERS AS REQUIRED BY CODE AND THE AUTHORITY HAVING JURISDICTION.

GENERAL NOTES

1. OVERCURRENT DEVICES IN AN INDIVIDUAL PIECE OF EQUIPMENT SHALL HAVE AN AIC RATING EQUAL TO THE OVERALL RATING OF THE EQUIPMENT - SERIES RATING OF DEVICES WITHIN A PIECE OF EQUIPMENT IS NOT ALLOWED.
2. SERIES CONNECTED DEVICES SHALL HAVE BEEN INVESTIGATED BY UL IN COMBINATION WITH THE END USE EQUIPMENT, AND THE EQUIPMENT IN WHICH THESE DEVICES ARE USED SHALL BE MARKED WITH THE SERIES CONNECTED RATING. EQUIPMENT SHALL BE MARKED IN ACCORDANCE WITH NEC REQUIREMENTS.
3. TERMINATIONS AND ENCLOSURES SHALL BE RATED FOR USE WITH 75 DEGREE CELSIUS CONDUCTORS.
4. SERVICE ENTRANCE EQUIPMENT, SWITCHBOARDS, DISTRIBUTION BOARDS, AND PANELBOARDS RATED AT 400 AMPS OR GREATER, SHALL BE PROVIDED WITH A MAIN OVERCURRENT DEVICE AND BUSSING RATED AT 100% CONTINUOUS OPERATION.
5. BRANCH OR FEEDER CIRCUIT OVER-CURRENT DEVICES RATED AT 400 AMPS OR HIGHER SHALL BE RATED FOR 100% CONTINUOUS OPERATION.
6. CONTRACTOR SHALL SUBMIT SWITCHBOARD SHOP DRAWINGS TO THE SERVING UTILITY FOR APPROVAL PRIOR TO FABRICATION. CONTRACTOR SHALL SECURE CONFIRMATION THAT THE PROPOSED SWITCHBOARD COMPLIES WITH THE POWER COMPANY REGULATIONS.
7. BUSSING:
   a. BUSSING SHALL BE COPPER OR ALUMINUM IN CONSTRUCTION. MAIN HORIZONTAL AND VERTICAL BUSSING SHALL BE FULL CAPACITY IN SWITCHBOARD SECTIONS.
   b. HORIZONTAL AND VERTICAL BUSSING SHALL BE FULL LENGTH. BUSSING SHALL HAVE A MINIMUM WITHSTAND RATING EQUAL TO THE AVAILABLE FAULT CURRENT INDICATED, BUT IN NO CASE SHALL THE RATING BE LESS THAN 65,000 AMPS, SYMMETRICAL.
8. GROUND FAULT RELAY SETTINGS:
   a. TO MINIMIZE NUISANCE TRIPPING OF THE MAIN AND FEEDER BREAKER, THE CONTRACTOR SHALL ADJUST THE GROUND FAULT RELAY SETTINGS FOR THE GFP DEVICES TO BE HIGHER THAN DOWNSTREAM GFP AND NON-GFP DEVICES. THE GROUND FAULT CURRENT PICK-UP AND TIME DELAY SETTINGS SHALL BE ADJUSTED, PER THE MANUFACTURERS RECOMMENDATIONS, RESULTING FROM A CONTRACTOR/MANUFACTURER PREPARED COORDINATION STUDY - WHICH SHALL BE DOCUMENTED IN THE SHOP DRAWING SUBMITTAL.
   b. DURING THE CONSTRUCTION PHASE OF THE PROJECT, GROUND FAULT RELAYS SHALL BE SET AT THE SHORTEST AVAILABLE TIME DELAY.
   c. AFTER SETTINGS HAVE BEEN ADJUSTED, THE CONTRACTOR SHALL HAVE THE GROUND FAULT SYSTEM TESTED BY AN INDEPENDENT TESTING AGENCY PER NEC 230-95 (C). THIS TEST SHALL BE PERFORMED IN THE PRESENCE OF THE LOCAL AUTHORITY HAVING JURISDICTION AND THE TEST RESULTS SHALL BE DELIVERED TO THE ENGINEER OF RECORD.
9. DRY TYPE TRANSFORMERS:
   a. DRY TYPE TRANSFORMERS OVER 112-1/2KVA SHALL HAVE A MINIMUM CLASS 155 INSULATION RATING SYSTEM.
   b. DRY TYPE TRANSFORMERS SHALL BE COMPLETELY ENCLOSED EXCEPT FOR VENTILATED OPENINGS..

KEY NOTES

1. CONTRACTOR TO PROVIDE A 250 AMP RATED SWITCH PER EXISTING MANUFACTURE MCC REQUIREMENTS. CONTRACTOR TO VERIFY WITH MANUFACTURE PROPER SWITCH CONFIGURATION AND PART NUMBER TO EXISTING MCC TO PROVIDE PROPER INSTALLATION PER NEW DEAERATOR REQUIREMENTS.
2. TEMP-1 EQUIPMENT WILL BE DE-ENERGIZED ONCE NEW DA/ST-1 IS INSTALLED AND IS READY TO COME ONLINE. ALL TEMPORARY ELECTRICAL CONNECTION AND LOADING WILL BE COMPLETELY REMOVED.

APPROVAL

REVIEWED IN ACCORDANCE WITH THE REQUIREMENTS OF T24, CCR
APPROVED
Department of Health Care Access & Information
Office of Statewide Hospital Planning & Development
8/9/2023, 7:23:46 AM
S23O562-36-00
Allen Cheng

CLIENT

SAN BERNARDINO COUNTY
PROJECT AND FACILITIES MANAGEMENT DEPARTMENT

385 NORTH ARROWHEAD AVENUE, 3RD FLOOR
SAN BERNARDINO, CA 92415-0184

PROJECT NAME

ARMC DEAERATOR #1 REPLACEMENT

PROJECT NO.
WBSE # 10.10.0847
CIP # 20-011
HCAI #

FACILITY NO.
17282

BUILDING NO.
BLD-00075 CENTRAL PLANT

400 N. PEPPER AVENUE
COLTON, CA 92324-1801

ENGINEER/ARCHITECT

IDS GROUP

1 PETERS CANYON ROAD, SUITE 130
IRVINE, CA. 92606
TEL: 949-387-8500, FAX: 949-387-0800

STAMP

REGISTERED PROFESSIONAL ENGINEER
DARREN B. SMITH
No. 30841
Exp. 12/31/24
MECHANICAL
STATE OF CALIFORNIA

STAMP

REGISTERED PROFESSIONAL ENGINEER
STEVEN M. COLLINS
No. E22808
ELECTRICAL
STATE OF CALIFORNIA

DATE SIGNED 04/18/23

ISSUE

REV.	DESCRIPTION	DATE
	HCAI SUBMITTAL	04/28/23
A	BACK CHECK #1	06/16/23
B	BACK CHECK #2	07/28/23

PROJECT IDENTIFICATION

THIS DRAWING WAS CREATED IN AUTODESK AUTOCAD V. 2021 UNLESS OTHERWISE NOTED.

THE ORIGINAL SIZE OF THIS SHEET IS 30" X 42"

THESE DRAWINGS AND SPECIFICATIONS ARE THE PROPERTY AND COPYRIGHT OF IDS GROUP AND SHALL NOT BE USED ON ANY OTHER PROJECT OR LOCATIONS EXCEPT AS DESCRIBED ON THE DRAWINGS, WITHOUT THE WRITTEN AGREEMENT WITH IDS GROUP.

IDS PROJECT NO.	22X066.02
DRAWN BY	AL
CHECKED BY	RP
APPROVED BY	MO

SHEET TITLE

SINGLE LINE DIAGRAM AND LOAD CALCS.

SHEET NUMBER

E-003

SHEET NO. 3 OF

PLAN CHECK - NOT FOR CONSTRUCTION

NOT FOR BID

IDS GROUP - FILE LOCATION: S:\PROJECTS\2022\SHARED\22X066.02 ARMC - REPLACEMENT DEAERATOR 105 CAD\05 ELEC\22X06602_E003_SLD PLOT DATE: 7/24/2023 2:27:26 PM USER: MANNY OCAMPO

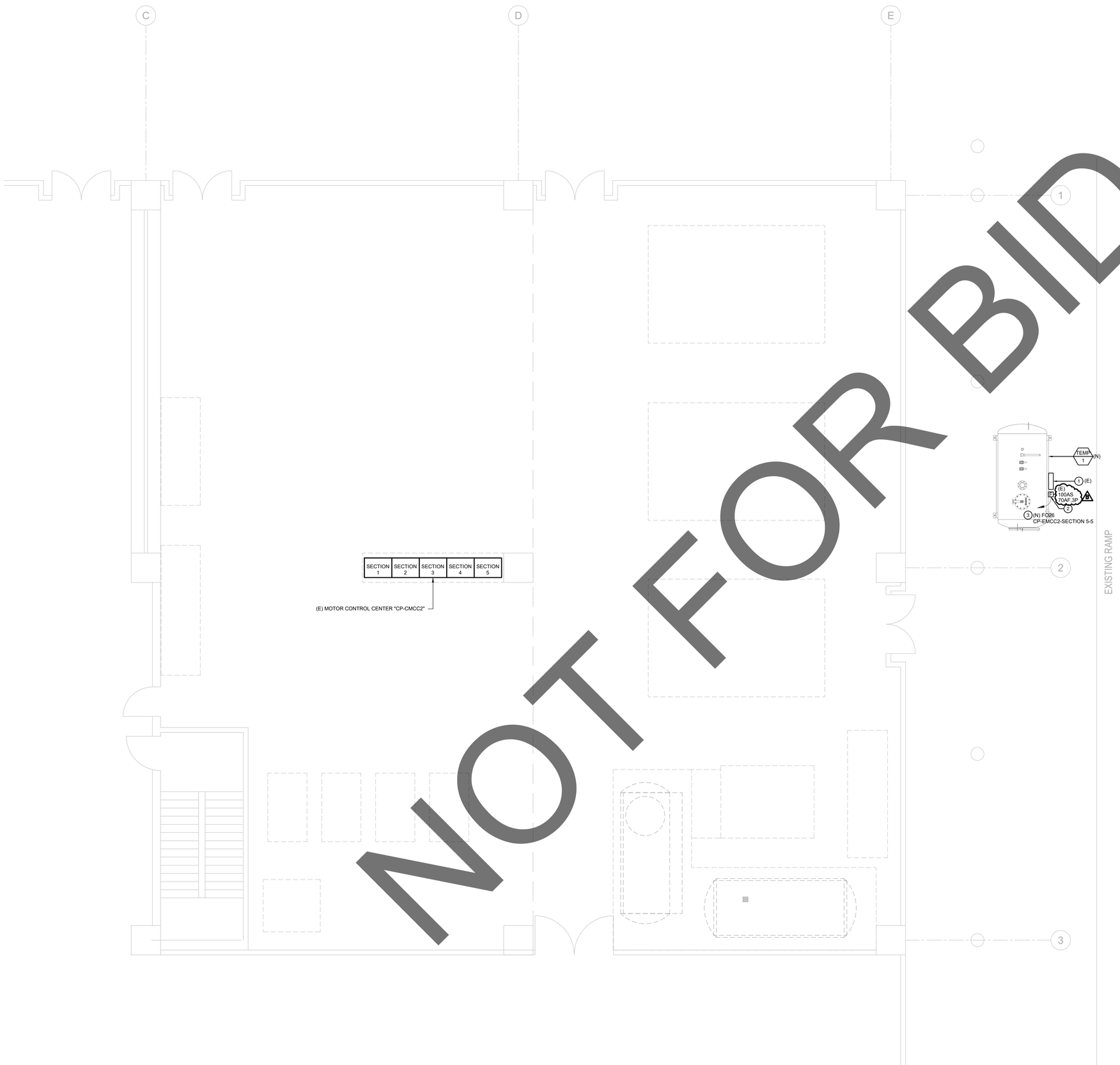

KEYNOTES

1. EXISTING TEMPORARY STEAM BOILER CONTROL PANEL LOCATED ON EQUIPMENT.
2. EXISTING PER MANUFACTURE EQUIPMENT DISCONNECT SWITCH. VERIFY EXACT LOCATION PRIOR TO ROUGH-IN.
3. PROVIDE NEW TEMPORARY CONNECTION FROM MECHANICAL EQUIPMENT TEMP-1 TO EXISTING MCC "CP-CMCC2" SECTION 5, SPACE 5 AS REQUIRED FOR TEMP POWER. VERIFY EXACT LOCATION AND REQUIREMENTS OF EQUIPMENT PRIOR TO ROUGH-IN. REFER TO SINGLE LINE DIAGRAM SHEET FOR FEEDER AND CONDUIT SIZING.

ELECTRICAL FLOOR PLAN - TEMPORARY WORK | 1/4" = 1'-0" | 1

APPROVAL

REVIEWED IN ACCORDANCE WITH THE REQUIREMENTS OF T24, CCR
APPROVED
Department of Health Care Access & Information
Office of Statewide Hospital Planning & Development
6/9/2023, 7:23:46 AM
S230562-36-00
Allen Cheng

CLIENT

SAN BERNARDINO COUNTY

SAN BERNANDINO COUNTY
PROJECT AND FACILITIES
MANAGEMENT DEPARTMENT

385 NORTH ARROWHEAD AVENUE, 3RD FLOOR
SAN BERNARDINO, CA 92415-0184

PROJECT NAME

ARMC DEAERATOR #1 REPLACEMENT

PROJECT NO.
WBSE # 10.10.0847
CIP # 20-011
HCAI #

FACILITY NO.
17282

BUILDING NO.
BLD-00075 CENTRAL PLANT

400 N. PEPPER AVENUE
COLTON, CA 92324-1801

ENGINEER/ARCHITECT

IDS

IDS GROUP

1 PETERS CANYON ROAD, SUITE 130
IRVINE, CA. 92606
TEL: 949-387-8500, FAX: 949-387-0800

STAMP

REGISTERED PROFESSIONAL ENGINEER
CARREN B. SMITH
No. 30841
Exp. 12/31/24
MECHANICAL
STATE OF CALIFORNIA

STAMP

REGISTERED PROFESSIONAL ENGINEER
STEVEN M. COLLIGAN
No. E22826
Exp. 12/31/24
ELECTRICAL
STATE OF CALIFORNIA

DATE SIGNED 04/18/23

ISSUE

REV.	DESCRIPTION	DATE
	HCAi SUBMITTAL	04/28/23
A	BACK CHECK #1	06/16/23
B	BACK CHECK #2	07/28/23

PROJECT IDENTIFICATION

THIS DRAWING WAS CREATED IN AUTODESK AUTOCAD V. 2021 UNLESS OTHERWISE NOTED.

THE ORIGINAL SIZE OF THIS SHEET IS 30" X 42"

THESE DRAWINGS AND SPECIFICATIONS ARE THE PROPERTY AND COPYRIGHT OF IDS GROUP AND SHALL NOT BE USED ON ANY OTHER PROJECT OR LOCATIONS EXCEPT AS DESCRIBED ON THE DRAWINGS, WITHOUT THE WRITTEN AGREEMENT WITH IDS GROUP.

IDS PROJECT NO.	22X066.02
DRAWN BY	AL
CHECKED BY	RP
APPROVED BY	MO

SHEET TITLE

ELECTRICAL FLOOR PLAN TEMPORARY WORK

SHEET NUMBER

E-101

SHEET NO. 4 OF

PLAN CHECK - NOT FOR CONSTRUCTION

IDS GROUP - FILE LOCATION: S:\PROJECTS\2022\SHARED\22X066.02 ARMC - REPLACEMENT DEAERATOR 1\05 CAD\05 ELEC\22X06602_E101_TEMP PLOT DATE: 7/24/2023 2:27:31 PM USER: MANNY.OCAMPO

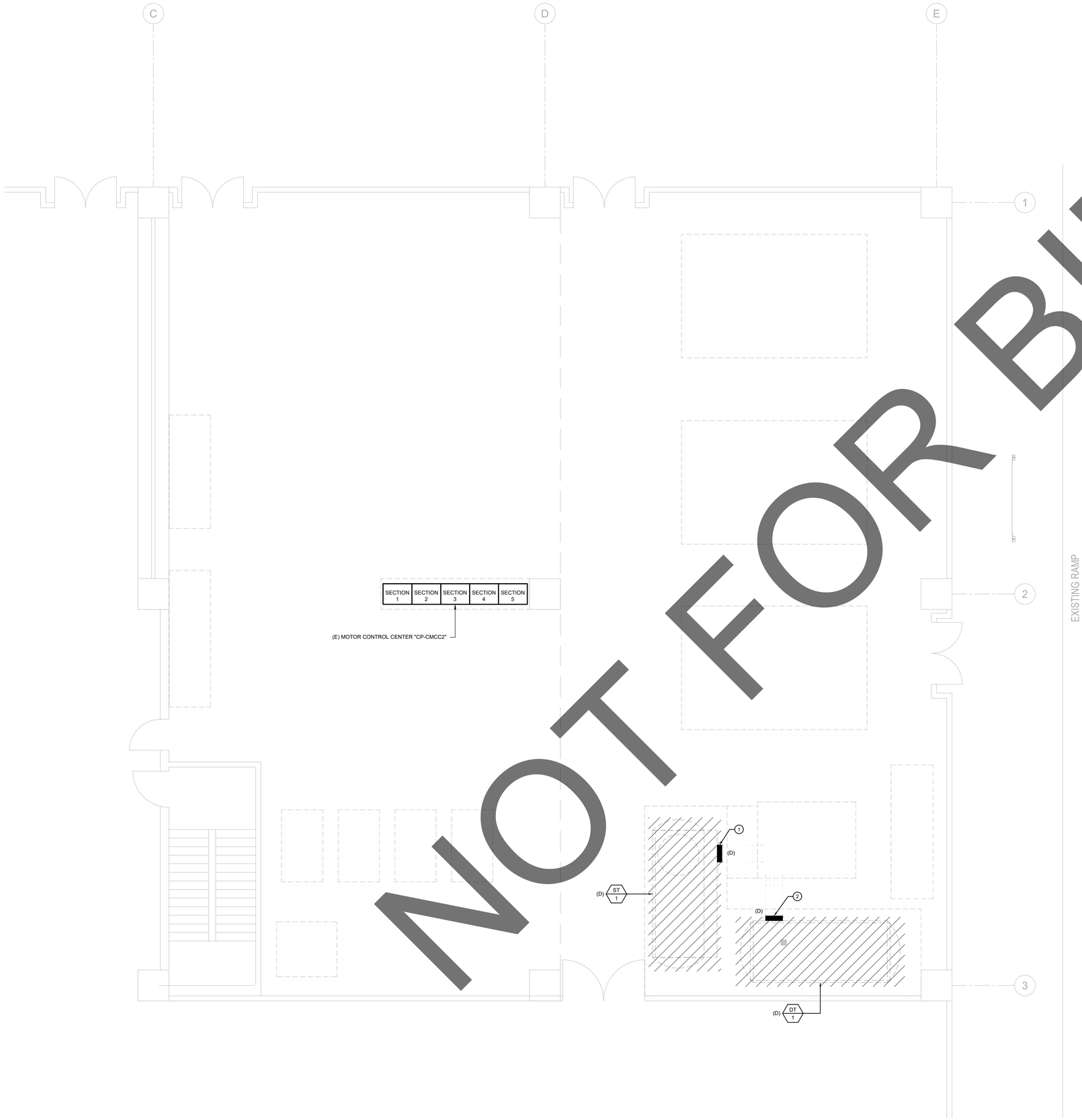

DEMOLITION KEYNOTES

1. CONTRACTOR TO DEMO EXISTING SURGE STATION PUMP CONTROL PANEL "ST-1" AS REQUIRED. SHUTOFF CIRCUITS WITHIN EXISTING MCC "CP-CMCC2" "MDFP-1" AND "MDFP-2". AND LABEL AS SPARE AND POSITION SWITCH TO OFF.
2. CONTRACTOR TO DEMO EXISTING BOILER STATION PUMP CONTROL PANEL "DT-1" AS REQUIRED. SHUTOFF CIRCUITS WITHIN EXISTING MCC "CP-CMCC2" "MBFP-1", "MBFP-2" AND "MBFP-3" AND LABEL AS SPARE AND POSITION SWITCH TO OFF.

ELECTRICAL FLOOR PLAN - DEMOLITION | 1/4" = 1'-0" | 1

APPROVAL

REVIEWED IN ACCORDANCE WITH THE REQUIREMENTS OF T24, CCR
APPROVED
Department of Health Care Access & Information
Office of Statewide Hospital Planning & Development
6/9/2023, 7:23:46 AM
S230562-36-00
Allen Cheng

CLIENT

SAN BERNARDINO COUNTY
PROJECT AND FACILITIES MANAGEMENT DEPARTMENT

385 NORTH ARROWHEAD AVENUE, 3RD FLOOR
SAN BERNARDINO, CA 92415-0184

PROJECT NAME

ARMC DEAERATOR #1 REPLACEMENT

PROJECT NO.
WBSE # 10.10.0847
CIP # 20-011
HCAI #

FACILITY NO.
17282

BUILDING NO.
BLD-00075 CENTRAL PLANT

400 N. PEPPER AVENUE
COLTON, CA 92324-1801

ENGINEER/ARCHITECT

IDS GROUP

1 PETERS CANYON ROAD, SUITE 130
IRVINE, CA 92606
TEL: 949-387-8500, FAX: 949-387-0800

STAMP

REGISTERED PROFESSIONAL ENGINEER
DARREN B. SMITH
No. 30841
Exp. 12/31/24
MECHANICAL
STATE OF CALIFORNIA

STAMP

REGISTERED PROFESSIONAL ENGINEER
STEVEN M. COLLINS
No. E22808
Exp. 12/31/24
ELECTRICAL
STATE OF CALIFORNIA

DATE SIGNED 04/18/23

ISSUE

REV.	DESCRIPTION	DATE
	HCAi SUBMITTAL	04/28/23
A	BACK CHECK #1	06/16/23
B	BACK CHECK #2	07/28/23

PROJECT IDENTIFICATION

THIS DRAWING WAS CREATED IN AUTODESK AUTOCAD V. 2021 UNLESS OTHERWISE NOTED.

THE ORIGINAL SIZE OF THIS SHEET IS 30" X 42"

THESE DRAWINGS AND SPECIFICATIONS ARE THE PROPERTY AND COPYRIGHT OF IDS GROUP AND SHALL NOT BE USED ON ANY OTHER PROJECT OR LOCATIONS EXCEPT AS DESCRIBED ON THE DRAWINGS, WITHOUT THE WRITTEN AGREEMENT WITH IDS GROUP.

IDS PROJECT NO.	22X066.02
DRAWN BY	AL
CHECKED BY	RP
APPROVED BY	MO

SHEET TITLE

ELECTRICAL FLOOR PLAN DEMOLITION

SHEET NUMBER

E-102

SHEET NO. 5 OF

PLAN CHECK - NOT FOR CONSTRUCTION

IDS GROUP - FILE LOCATION: S:\PROJECTS\2022\SHARED\22X066.02 ARMC - REPLACEMENT DEAERATOR 1\05 CAD\05 ELEC\22X06602_E102_DEMO PLOT DATE: 7/24/2023 2:27:34 PM USER: MANNY.OCAMPO

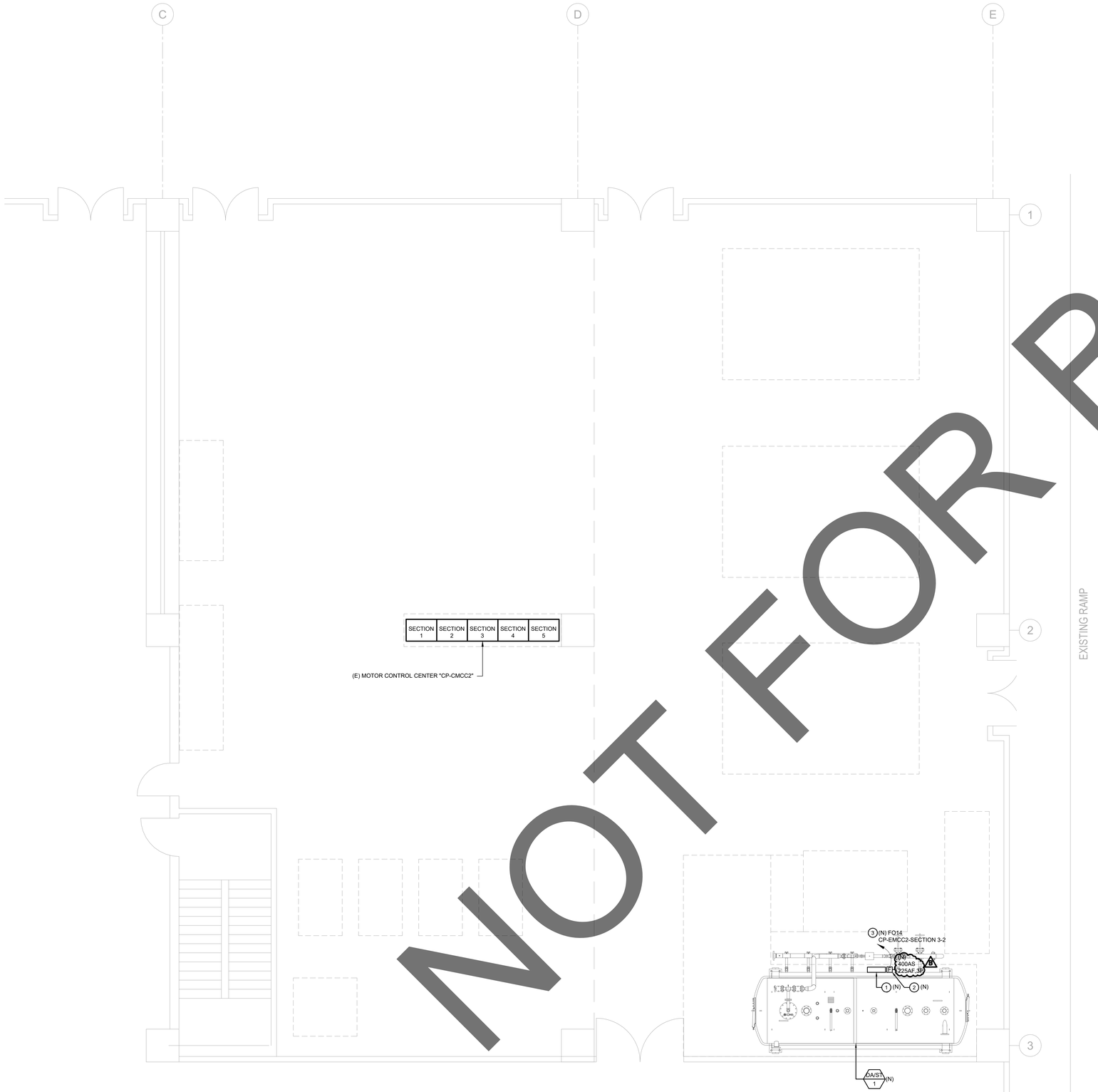

NOT FOR BID

KEYNOTES

1. NEW STEAM BOILER CONTROL PANEL LOCATED ON EQUIPMENT. VERIFY EXACT LOCATION.
2. NEW EQUIPMENT DISCONNECT SWITCH. VERIFY EXACT LOCATION WITH/NEXT TO EQUIPMENT CONTROL PANEL PRIOR TO ROUGH-IN.
3. PROVIDE ELECTRICAL CONNECTION FROM MECHANICAL EQUIPMENT DA/ST-1 TO EXISTING MCC "CP-CMCC2" SECTION 5, SPACE 5 AS REQUIRED FOR PERMANENT POWER. VERIFY EXACT LOCATION AND REQUIREMENTS OF EQUIPMENT PRIOR TO ROUGH-IN. REFER TO SINGLE LINE DIAGRAM SHEET FOR NEW FEEDER AND CONDUIT SIZING.

ELECTRICAL FLOOR PLAN | 1/4" = 1'-0" | 1

APPROVAL

REVIEWED IN ACCORDANCE WITH THE REQUIREMENTS OF T24, CCR
APPROVED
Department of Health Care Access & Information
Office of Statewide Hospital Planning & Development
6/9/2023, 7:23:46 AM
S230562-36-00
Allen Cheng

CLIENT

SAN BERNARDINO COUNTY
PROJECT AND FACILITIES MANAGEMENT DEPARTMENT

385 NORTH ARROWHEAD AVENUE, 3RD FLOOR
SAN BERNARDINO, CA 92415-0184

PROJECT NAME

ARMC DEAERATOR #1 REPLACEMENT

PROJECT NO.
WBSE # 10.10.0847
CIP # 20-011
HCAI #

FACILITY NO.
17282

BUILDING NO.
BLD-00075 CENTRAL PLANT

400 N. PEPPER AVENUE
COLTON, CA 92324-1801

ENGINEER/ARCHITECT

IDS GROUP

1 PETERS CANYON ROAD, SUITE 130
IRVINE, CA. 92606
TEL: 949-387-8500, FAX: 949-387-0800

STAMP

REGISTERED PROFESSIONAL ENGINEER
LAUREN B. SMITH
No. 30841
Exp. 12/31/24
MECHANICAL
STATE OF CALIFORNIA

STAMP

REGISTERED PROFESSIONAL ENGINEER
STEVEN M. MOELTNER
No. E22809
Exp. 12/31/24
ELECTRICAL
STATE OF CALIFORNIA

DATE SIGNED 04/18/23

ISSUE

REV.	DESCRIPTION	DATE
	HCAi SUBMITTAL	04/28/23
A	BACK CHECK #1	06/16/23
B	BACK CHECK #2	07/28/23

PROJECT IDENTIFICATION

THIS DRAWING WAS CREATED IN AUTODESK AUTOCAD V. 2021 UNLESS OTHERWISE NOTED.

THE ORIGINAL SIZE OF THIS SHEET IS 30" X 42"

THESE DRAWINGS AND SPECIFICATIONS ARE THE PROPERTY AND COPYRIGHT OF IDS GROUP AND SHALL NOT BE USED ON ANY OTHER PROJECT OR LOCATIONS EXCEPT AS DESCRIBED ON THE DRAWINGS, WITHOUT THE WRITTEN AGREEMENT WITH IDS GROUP.

IDS PROJECT NO.	22X066.02
DRAWN BY	AL
CHECKED BY	RP
APPROVED BY	MO

SHEET TITLE

ELECTRICAL FLOOR PLAN

SHEET NUMBER

E-201

SHEET NO. 6 OF

PLAN CHECK - NOT FOR CONSTRUCTION

IDS GROUP - FILE LOCATION: S:\PROJECTS\2022\SHARED\22X066.02 ARMC - REPLACEMENT DEAERATOR 1\05 CAD\05 ELEC\22X06602_E201_NEW PLOT DATE: 7/24/2023 2:27:40 PM USER: MANNY.OCAMPO

NOT USED | NO SCALE | 9

NOT USED | NO SCALE | 6

NOT USED | NO SCALE | 3

NOT USED | NO SCALE | 8

NOT USED | NO SCALE | 5

NOT USED | NO SCALE | 2

NOT USED | NO SCALE | 7

NOT USED | NO SCALE | 4

NOTE: ALL GROUNDING SHALL BE INSTALLED IN ACCORDANCE WITH ARTICLE 250 OF THE CALIFORNIA ELECTRICAL CODE 2022.

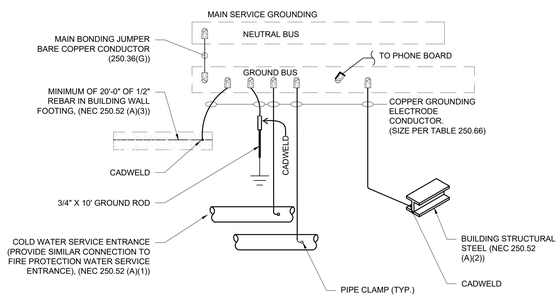

GROUNDING DETAIL | NO SCALE | 1

NOT FOR BID

APPROVAL

REVIEWED IN ACCORDANCE WITH THE REQUIREMENTS OF T24, CCR
APPROVED
Department of Health Care Access & Information
Office of Statewide Hospital Planning & Development
6/9/2023, 7:23:46 AM
S230562-36-00
Allen Cheng

CLIENT

SAN BERNARDINO COUNTY

SAN BERNANDINO COUNTY
PROJECT AND FACILITIES
MANAGEMENT DEPARTMENT

385 NORTH ARROWHEAD AVENUE, 3RD FLOOR
SAN BERNARDINO, CA 92415-0184

PROJECT NAME

ARMC DEAERATOR #1 REPLACEMENT

PROJECT NO.
WBSE # 10.10.0847
CIP # 20-011
HCAi #

FACILITY NO.
17282

BUILDING NO.
BLD-00075 CENTRAL PLANT

400 N. PEPPER AVENUE
COLTON, CA 92324-1801

ENGINEER/ARCHITECT

IDS

IDS GROUP

1 PETERS CANYON ROAD, SUITE 130
IRVINE, CA. 92606
TEL: 949-387-8500, FAX: 949-387-0800

STAMP

REGISTERED PROFESSIONAL ENGINEER
DARREN B. PARADIS
No. 30841
Exp. 12/31/24
MECHANICAL
STATE OF CALIFORNIA

STAMP

REGISTERED PROFESSIONAL ENGINEER
STEVEN M. COLLINS
No. E22808
Exp. 12/31/24
ELECTRICAL
STATE OF CALIFORNIA

DATE SIGNED 04/18/23

ISSUE

REV.	DESCRIPTION	DATE
	HCAi SUBMITTAL	04/28/23
A	BACK CHECK #1	06/16/23
B	BACK CHECK #2	07/28/23

PROJECT IDENTIFICATION

THIS DRAWING WAS CREATED IN AUTODESK AUTOCAD V. 2021 UNLESS OTHERWISE NOTED.

THE ORIGINAL SIZE OF THIS SHEET IS 30" X 42"

THESE DRAWINGS AND SPECIFICATIONS ARE THE PROPERTY AND COPYRIGHT OF IDS GROUP AND SHALL NOT BE USED ON ANY OTHER PROJECT OR LOCATIONS EXCEPT AS DESCRIBED ON THE DRAWINGS, WITHOUT THE WRITTEN AGREEMENT WITH IDS GROUP.

IDS PROJECT NO.	22X066.02
DRAWN BY	AL
CHECKED BY	RP
APPROVED BY	MO

SHEET TITLE

ELECTRICAL DETAILS

SHEET NUMBER

E-501

SHEET NO. 7 OF

PLAN CHECK - NOT FOR CONSTRUCTION

IDS GROUP - FILE LOCATION: S:\PROJECTS\2022\SHARED\22X066.02 ARMC - REPLACEMENT DEAERATOR 1\05 CAD\05 ELEC\22X06602_E501_DETAIL PLOT DATE: 7/24/2023 2:27:43 PM USER: MANNY.OCAMPO