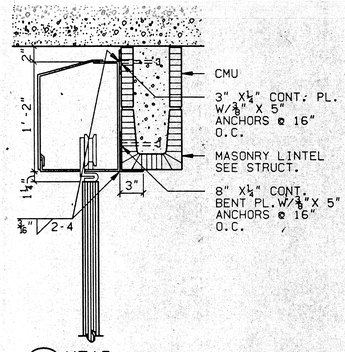

55 HEAD
SCALE: 1½" = 1'-0"

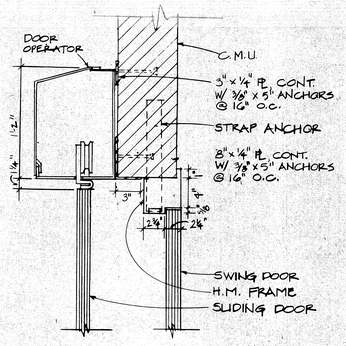

59A HEAD 59B

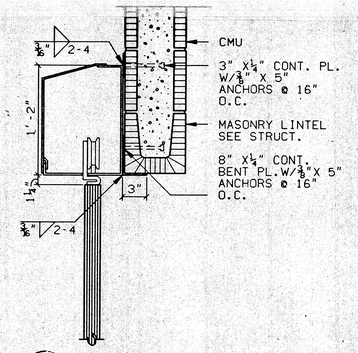

63 HEAD
SCALE: 1½" = 1'-0"

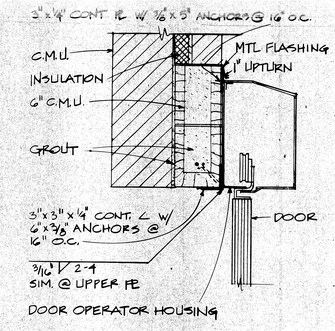

67 HEAD

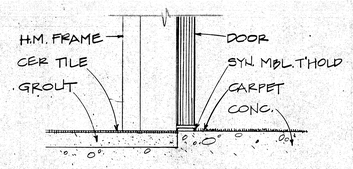

71 SILL

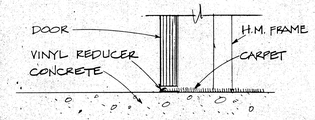

72 SILL

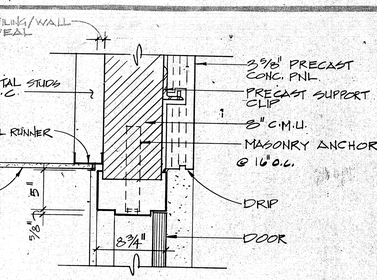

78 HEAD

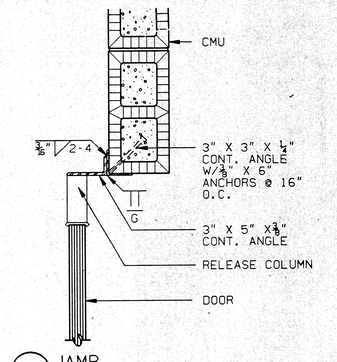

56 JAMB
SCALE: 1½" = 1'-0"

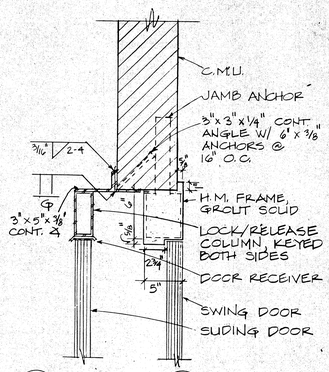

60A JAMB
M.O. = DOOR WIDTH + 8"
60B JAMB

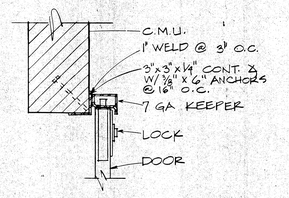

64 JAMB

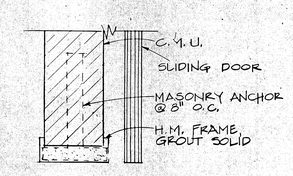

68 JAMB

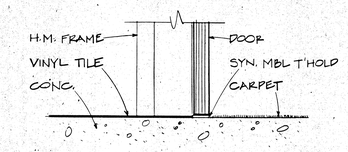

74 SILL

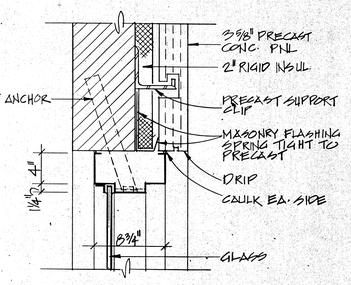

80 HEAD

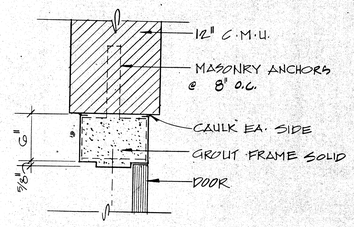

79 JAMB

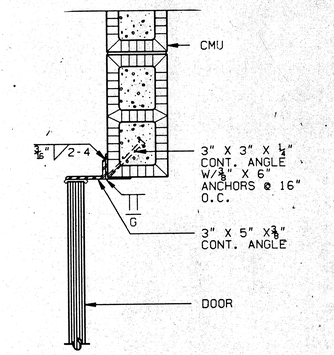

57 JAMB
SCALE: 1½" = 1'-0"

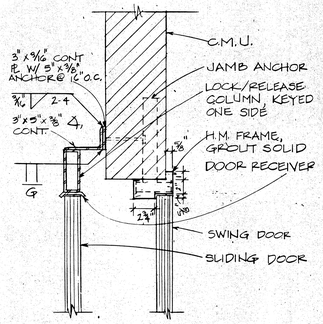

61A JAMB
M.O. = DOOR WIDTH + 4"
61B JAMB

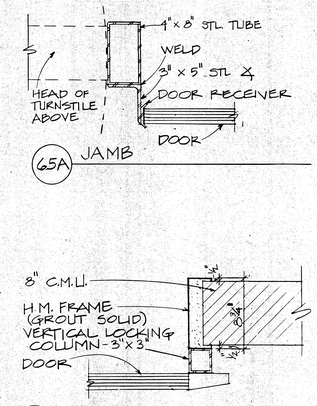

65A JAMB
65B JAMB

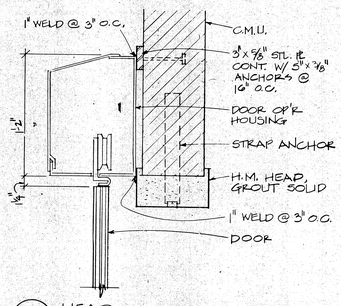

69 HEAD

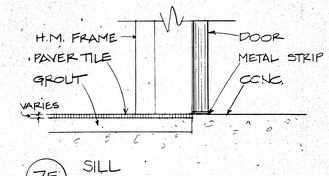

75 SILL

81 JAMB

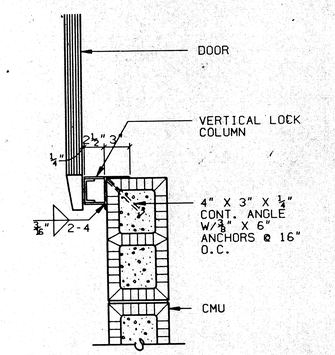

58 JAMB
SCALE: 1½" = 1'-0"

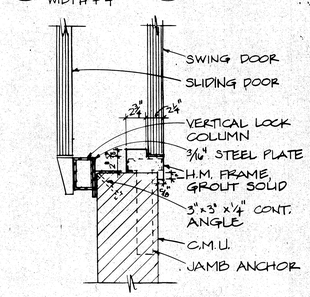

62A JAMB 62B

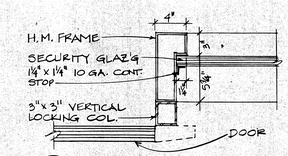

65C JAMB

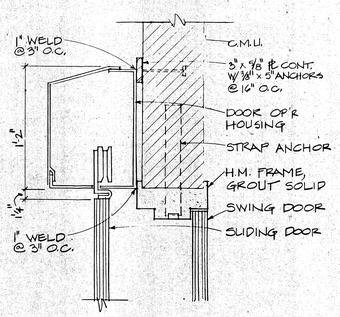

70 HEAD

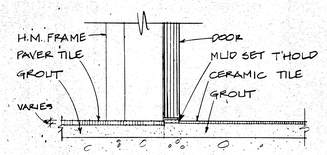

77 SILL

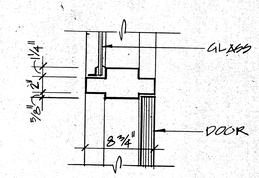

82 JAMB

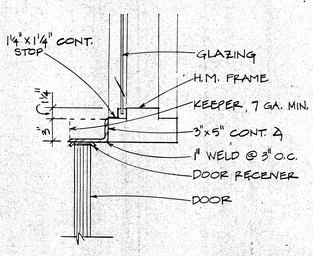

66 JAMB

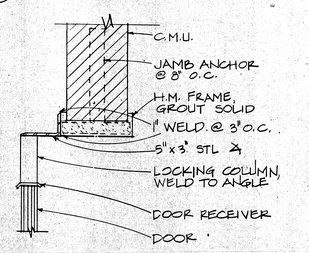

70A JAMB

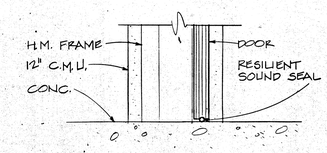

77A SILL

NOTE: ALL DETAILS AT 1½" = 1'-0", U.N.O.

ROSSER FABRAP INTERNATIONAL

ROSSER FABRAP INTERNATIONAL, Inc.
Comprehensive Services for Building
Corporate Headquarters
Atlanta Savannah Tampa

Revisions

No	Date	Description
1	2/17/89	ADDENDA POSTED/ISSUED FOR CONSTRUCTION

ROSSER FABRAP INTERNATIONAL
Criminal Justice Architecture, Technology, Planning, Interiors, Mechanical, Electrical, Plumbing, Security, & Civil Engineering.

JUSTICE SYSTEMS INCORPORATED
Criminal Justice Operations, Programming

JOHNSON & NIELSEN
Structural Engineering

WEST • VALLEY • DETENTION • CENTER
FOR THE COUNTY OF SAN BERNARDINO, CALIFORNIA

HARRY MAYS, COUNTY ADMINISTRATION OFFICER

FLOYD TIDWELL, SHERIFF

BOARD OF SUPERVISORS
Jerry Eaves, First District
Jon Mikels, Second District
Barbara Cram Riordan, Third District
Larry Walker, Fourth District
Edward Hinderaker, Fifth District

STATE OF CALIFORNIA
DAVID A. CLARK
C 015871
REGISTERED ARCHITECT

HEAD/JAMB/SILL DETAILS - DOORS AND FRAMES

Job No. 88058.06
Date 10-17-88

A 13.8

FOR CONSTRUCTION