BUILDING BLOCKS - FLOOR OR GROUND SURFACE
1. Floor and ground surfaces shall be stable, firm, and slip resistant. §11B-302.1
2. Carpet or carpet tile shall be securely attached and shall have a firm cushion, pad, or backing or no cushion or pad. Carpet or carpet tile shall have a level loop, textured loop, level cut pile, or level cut/uncut pile texture. Pile height shall be ½ inch maximum. §11B- 302.2, Figure 11B-302.2
3. Exposed edges of carpet shall be fastened to floor surfaces and shall have trim on the entire length of the exposed edge. Carpet edge trim shall comply wtih 11B-303 changes in level. Per 11B-302.2
CHANGES IN LEVEL
4. Vertical changes in level for floor or ground surfaces may be 1/4" high max. and without edge treatment. Changes in level greater than 1/4" and not exceeding 1/2" in height shall be beveled with a slope not steeper than 1:2. Per 11B-303, Figures 11B-303.2 & 11B-303.3
5. Changes in level greater than ½" in height shall be ramped and shall comply with the requirements of 11B-405 Ramps or 11B-406 Curb Ramps as applicable. §11B-303
CLEAR FLOOR OR GROUND SPACE
6. Clear floor or ground spaces shall meet the requirements of 11B-302 Floor or Ground Surfaces and shall not have changes in level except for slopes not steeper than 1:48 (2.083%). §11B-305
7. Clear floor or ground space shall be 30" minimum by 48" minimum. §11B-305.3, Figure 11B-305.3
8. Clear floor or ground spaces shall be positioned for either forward or parallel approach to an element unless otherwise specified. One full unobstructed side of the clear floor or ground space shall adjoin an accessible route or adjoin another clear floor or ground space. §11B-305.5, §11B-305.6, Figure §11B-305.5
9. Clear floor or ground space may include knee and toe clearance complying with 11B-306 knee and Toe Clearance unless otherwise specified. §11B-305.4
KNEE AND TOE CLEARANCE
10. For built-in dining required to be accessible, toe clearance shall be provided that is 30 inches in width and 9 inches in height above the finish floor or ground for a depth of 19 inches minimum. §11B-306.2.1
11. Space extending greater than 6" beyond the available knee clearance at 9" above the finish floor or ground shall not be considered toe clearance. § 11B-306.2.4
12. Toe clearance shall extend 19 inches maximum under lavatories for toilet and bathing facilities and 25 inches maximum under other elements. §11B-306.2.2
13. At lavatories in toilet and bathing facilities, knee clearance shall be provided that is 30 inches in width for a depth of 11 inches at 9 inches above the finish floor or ground and for a depth of 8 inches at 27 inches above the finish floor or ground increasing to 29 inches high minimum above the finish floor or ground at the front edge of a counter with a built-in lavatory or at the front edge of a wall-mounted lavatory fixture. §11B-306.3.3, Figure 11B-306.3(c)
14. At dining and work surfaces required to be accessible, knee clearance shall be provided that is 30 inches in width at 27 inches above the finish floor or ground for a
depth of at least 19 inches. §11B-306.3
15. Knee clearance shall extend 25" maximum under an element at 9" above the finsih floor or ground. §11B-306.3.2
PROTRUDING OBJECTS
16. Except for handrails, objects with leading edges more than 27 inches and less than 80 inches above the finish floor or ground shall protrude no more than 4 inches
horizontally into the circulation path. Handrails may protrude 4½ inches maximum. §11B-307.2, Figure 11B-307.2
17. Freestanding objects mounted on posts or pylons shall overhang circulation paths no more than 12 inches when located from 27 to 80 inches above the finish floor or ground. §11B-307.3, Figure 11B-307.3(a)
18. Protruding objects shall not reduce the clear width required for accessible routes. §11B-307.5
19. Lowest edge of a sign or other obstruction, when mounted between posts or pylons separated with a clear distance greater than 12 inches, shall be less than 27 inches or more than 80 inches above the finish floor or ground. §11B-307.3, Figure 11B-307.3(b)
20. Edge of signs or other objects, when mounted on posts or pylons with their bottom edges less than 80" above the floor or ground surface, shall be rounded or eased and the corners shall have a minimum radius of 1/8". §11B-307.3.1
21. Vertical clearance shall be at least 80 inches high on circulation paths except at door closers and door stops, which may be 78 inches minimum above the finish floor or ground. §11B-307.4
REACH RANGES
22. Electrical controls and switches intended to be used by the occupant of a room or area to control lighting and receptacle outlets, appliances or cooling, heating and ventilating equipment shall be located within allowable reach ranges. Low reach shall be measured to the bottom of the outlet box and high reach shall be measured to the top of the outlet box. §11B-308.1.1
23. Electrical receptacle outlets on branch circuits of 30 amperes or less and communication system receptacles shall be located within allowable reach ranges. Low reach shall be measured to the bottom of the outlet box and high reach shall be measured to the top of the outlet box. §11B-308.1.2.
24. High forward reach that is unobstructed shall be 48 inches maximum and the low forward reach shall be 15 inches minimum above the finish floor or ground. § 11B-308.2.1, Figure 11B-308.2.1
25. High forward reach shall be 48 inches maximum where the reach depth is 20 inches or less and 44 inches maximum where the reach depth exceeds 20 inches. High forward reach shall not exceed 25 inches in depth. §11B-308.2.2, Figure 11B-308.2.2
26. Where a high forward reach is over an obstruction, the clear floor space shall extend beneath the element for a distance not less than the required reach depth over the obstruction. §11B-308.2.2
27. High side reach shall be 48 inches maximum and the low side reach shall be 15 inches minimum above the finish floor where the side reach is unobstructed or the depth of any obstruction does not exceed 10 inches. §11B-308.3.1, Figure 11B-308.3.1
28. High side reach shall be 46 inches maximum above the finish floor or ground where the high side reach is over an obstruction more than 10 inches but not more than 24 inches in depth. §11B-308.3.2, Figure 11B-308.3.2
29. Obstructions for high side reach shall not exceed 34 inches in height and 24 inches in depth. §11B-308.3.2, Figure 11B-308.3.2
30. Operable parts on accessible elements, accessible routes, and in accessble rooms and spaces shall be provided a clear floor or ground space complying with 11B-305 Clear Floor or Ground Space and be placed within one or more of the reach ranges specified in 11B-308 Reach Ranges. **§11B-309.2**
31. Operable parts shall be operable with one hand and shall not require tight grasping, pinching, or twisting of the wrist. Force required to activate operable parts shall be 5 pounds maximum. **§11B-309.4**
32. Not Used.
33. Elements that ae exempt from all requirements for operable parts requirements include electrical or communication receptacles serving a dedicated use; floor electrical receptacles; HVAC diffusers, exercise machines and exercise equipment and those operable parts intended for use only by service or maintenance personnel. **§11B-205.1**
34. Except for light switches, where redundant controls are provided for a single element, one control in each space shall not be required to comply with Section 11B-309 Operable Parts. **§11B-205.1**
ACCESSIBLE ROUTES
DOORS, DOORWAYS, AND GATES
1. There shall be no projections into the required clear opening width lower than 34" above the finish floor or ground. Projections into the clear opening width between 34" and 80" above the finish floor or ground shall not exceed 4". § **11B-404.2.3**
2. Not used.
3. Handles, pulls, latches, locks, and other operable parts on doors and gates shall comply with 11B-309.4 Operation. Operable parts of such hardware shall be 34 inches minimum and 44 inches maximum above the finish floor or ground. Where sliding doors are in the fully open position, operating hardware shall be exposed and usable from both sides. **§11B-404.2.7**
4. Door and gate closing speed shall comply with the following:
   a. Door closer and gate closer shall be adjusted so that from an open position of 90 degrees, the time required to move the door to a position 12 degrees from the latch is 5 seconds minimum. **§11B-404.2.8.1**
   b. Door and gate spring hinges shall be adjusted so that from the open position of 70 degrees, the door or gate shall move to the closed position in 1.5 seconds minimum. **§11B-404.2.8.2**
5. The force for pushing or pulling open a door or gate other than fire doors shall be as follows: **§11B-404.2.9**
   a. Interior hinged doors and gates: 5 pounds maximum.
   b. Sliding or folding doors: 5 pounds maximum.
   c. Required fire doors: the minimum opening force allowable by the appropriate administrative authority, not to exceed 15 pounds.
   d. Exterior hinged doors: 5 pounds maximum.
6. Swinging door and gate surfaces within 10 inches of the finish floor or ground measured vertically shall have a smooth surface on the push side extending the full width of the door or gate. Parts creating horizontal or vertical joints in these surfaces shall be within 1/16 inch of the same plane as the other and be free of sharp or abrasive edges. Cavities created by added kick plates shall be capped. § **11B-404.2.10**
7. Doors and side lights adjacent to doors and gates, containing one or more glazing panels that permit viewing through the panels shall have the bottom of at least one glazed panel located 43" maximum above the finish floor. **§11B-404.2.11**
CURB RAMPS
8. Perpendicular ramp runs shall have a running slope not steeper than 1:12 (8.33%). **§11B-406.2.1**
9. For perpendicular ramps, where provided, curb ramp flares shall not be steeper than 1:10. **§11B-406.2, Figure 11B-406.2.2**
10. The running slope of the curb ramp segments shall be in-line with the direction of sidewalk travel. Ramp runs shall have a running slope not steeper than 1:12 (8.33%). **§11B-406.3.1, Figure 11B-406.3.2**
11. A turning space 48 inches minimum by 48 inches minimum shall be provided at the bottom of the curb ramp. The slope of the turning space in all directions shall be 1:48 maximum (2.083%). **§11B-406.3.2**
12. Blended transition ramps hall have a running slope not steeper than 1:20 (5%). **§11B-406.4.1**
13. Curb ramps and the flared sides of curb ramps shall be located so that they do not project into vehicular traffic lanes, parking spaces, or parking access aisles. Curb ramps at marked crossings shall be wholly contained within the markings, excluding any flared sides. **§11B- 406.5.1**
14. The clear width of curb ramp runs (excluding any flared sides), blended transitions, and turning spaces shall be 48 inches minimum. **§11B-406.5.2**
15. Landings shall be provided at the tops of curb ramps and blended transitions (parallel curb ramps shall not be required to comply). The landing clear length shall be 48 inches minimum. The landing clear width shall be at least as wide as the curb ramp, excluding any flared sides, or the blended transition leading to the landing.
The slope of the landing in all directions shall be 1:48 (2.083%) maximum. § **11B-406.5.3**
16. Floor or ground surfaces of curb ramps and blended transitions shall comply with 11B-405.4 Floor or Ground Surfaces. **§11B-406.5.4**
17. Curb ramps and blended transitions shall comply with 11B-405.10 Wet Conditions. **§11B-406.5.5**
18. Grade breaks at the top and bottom of curb ramp runs shall be perpendicular to the direction of the ramp run. Grade breaks shall not be permitted on the surface of ramp runs and turning spaces. Surface slopes that meet at grade breaks shall be flush. **§11B-406.5.6**
19. The cross slope of curb ramps and blended transitions shall be 1:48 (2.083%) maximum. § **11B-406.5.7**
20. Counter slopes of adjoining gutters and road surfaces immediately adjacent to and within 24 inches of the curb ramp shall not be steeper than 1:20 (5%). The
adjacent surfaces at transitions at curb ramps to walks, gutters, and streets shall be at the same level. **§11B-406.5.8**
21. Not used.
22. Curb ramps and blended transitions shall have detectable warnings complying with 11B-705 Detectable Warnings. **§11B-406.5.12**
DETECTABLE WARNINGS AND DETECTABLE DIRECTIONAL TEXTURE
23. Curb ramps shall have detectable warnings that extend 36 inches in the direction of travel for the full width of the ramp run excluding any flared sides. **§11B-247.1.2.2, §11B-705.1.2.2**
24. On perpendicular curb ramps, detectable warnings shall be located so the edge nearest the curb is 6 to 8 inches from the line at the face of the curb marking the transition between the curb and the gutter, street or highway. **§11B-247.1.2.2, §11B-705.1.2.2**
25. Detectable warning details showing the following:
   a. Truncated domes in a detectable warning surface shall have a base diameter of 0.9 to 0.92 inches, a top diameter of 0.45 to 0.47 inches, and a height of 0.18 to 0.22 inches. § **11B-705.1.1.1, Figure 11B-705.1**
   b. Truncated domes placed in a grid pattern in a detectable warning surface shall have a center to center spacing of 1.6 to 2.4 inches, and a minimum base-to-base spacing of 0.65 inches, measured between the most adjacent domes on a square grid. **§11B- 705.1.1.2, Figure 11B-705.1**
   c. Not used.
   d. Detectable warning surfaces shall visually contrast light-on-dark or dark-on-light with adjacent walking surfaces or be separated from adjacent surfaces by a 1 inch wide black strip. Material used to provide contrast shall be an integral part of the surface. **§11B-705.1.1.3**
   e. Detectable warning surfaces shall differ from adjoining surfaces in resiliency or sound-on-cane contact except at curb ramps, islands or cut-through medians. **§11B-705.1.1.4**
   f. Detectable warning surfaces shall be yellow and approximate FS 33538 of Federal Standard 595C. **§11B-705.1.1.3.1**
   g. Not used.
   h. Not used.
   i. Not used.
   j. Not used.
   k. Detectable warning products and directional surfaces must ensure consistency and uniformity for shape, color fastness, conformation, sound-on-cane acoustic quality, resilience, and that attachment will not degrade significantly (<10%) for at least five years.
§12-11B-209, §12-11B-210
GENERAL SITE AND BUILDING ELEMENTS
SIGNS
1. Raised characters shall comply with 11B-703.2 Raised characters and shall be duplicated in Braille complying with 11B-703.3 Braille. Raised characters shall be installed in accordance with 11B-703.4 Installation Height and Location. **§11B-703.2**
   a. Raised characters shall be 1/32" minimum above their background. **§11B-703.2.1**
   b. Characters shall be uppercase. §11B-703.2.2
   c. Characters shall be sans serif. Characters shall not be italic, oblique, script, highly decorative, or of other unusual forms. §11B-703.2.3
   d. Characters shall be selected from fonts where the width of the uppercase letter "O" is 55 60 percent minimum and 110 percent maximum of the height of the uppercase letter "I". § 11B-703.2.4
e. Characters height measured vertically from the baseline of the character shall be 5/8" minimum and 2" maximum based on the height of the uppercase letter "I". **§11B-703.2.5**
f. Stroke thickness of the uppercase letter "I" shall be 15 percent maximum of the height of the character. **§11B-703.2.6**
g. Character spacing shall be measured between the two closest points of adjacent raised characters within a message, excluding word spaces. Where characters have rectangular cross sections, spacing between individual raised characters shall be 1/8" minimum and 4 times the raised characters stroke width maximum. Where characters have other cross sections, spacing between individual raised characters shall be 1/16" minimum and 4 times the raised characters stroke width maximum at the base of the cross section, and 1/8" inch minimum and 4 times the raised character stroke width maximum at the top of the cross sections. Characters shall be separated from raised borders and decorative elements 3/8" minimum. **§11B-703.2.7**
h. Spacing between the baselines of separate lines of raised characters within a message shall be 135 percent minim and 170 percent maximum of the raised character height. **§11B-703.2.8**
i. Text shall be in a horizontal format. **§11B-703.2.9**
2. Braille shal be contracted (Grade 2) and shall comply with 11B-703.3 Braille and 11B-703.4 Installation Height and Location. **§11B-703.3**
   a. Braille dots shall have a domed or rounded shape and shall comply with Table 11B-703.3.1 The indication of an uppercase letter or letters shall only be used before the first word of sentences, proper nouns and names, individual letters of the alphabet, initials, and acronyms. § **11B-703.3.1**
   b. Braille shall be positioned belwo the corresponding text in a horizontal format, flush left or centered. If text is multi-lined, Braille shall be placed below the entire text. Braille shall be separted 3/8" minimum and ½" maximum from any other tactile characters and 3/8" minimum from raised borders and decorative elements. **§11B-703.3.2**
3. Signs with tactile characters shall comply with 11B-703.4 Installation Height and Location. § **11B-703.4**
   a. Tactile characters on signs shall be located 48 inches minimum above finish floor or ground surface, measured from baseline of the lowest tactile character Braille cells and 60 inches maximum above finish floor or ground surface, measured from the baseline of the highest tactile character line of raised characters. **§11B703.4.1 (See exception)**
   b. Where a tactile sign is provided at a door, the sign shall be located alongside the door at the latch side. Where a tactile sign is provided at double doors with one active leaf, the sign shall be located on the inactive leaf. Where a tactile sign is provided at double doors with two active leafs, the sign shall be located to the right of the right hand door Where there is no wall space at the latch side of a single door or at the right side of double doors, signs shall be located on the nearest adjacent wall. Signs containing tactile characters shall be located so that a clear floor space of 18 inches minimum by 18 inches minimum, centered on the tactile character, is provided beyond the arc of any door swing between the closed position and 45 degree open position. Where permanent identification signage is provided for rooms and spaces they shall be located on the approach side of the door as one enters the room or space. Signs that identify exits shall be located on the approach side of the door as one exits the room or space. **11B-703.4.2 (See exception)**
4. Visual characters shall comply with the following, except where visual characters comply with 11B-703.2 Raised Characters and are accompanied by Braille complying with 11B-703.3 Braille, they shall not be required to comply with 11B-703.5.2 through 11B-703.5.6, 11B-703.5.8 and 11B-703.5.9:
   a. Characters and their background shall have a non-glare finish. Characters shall contrast with their background with either light characters on a dark background or dark characters on a light background. §11B-703.5.1
   b. Characters shall be uppercase or lowercase or a combination of both. **§11B-703.5.2**
   c. Characters shall be conventional in form. Characters shall not be italic, oblique, script, highly decorative, or of other unusual forms. **§11B-703.5.3**
   d. Characters shall be selected from fonts where the width of the uppercase letter "O" is 55 60 percent minimum and 110 percent maximum of the height of the uppercase letter "I". § **11B-703.5.4**
   e. Minimum character height shall comply with Table 11B-703.5.5 Viewing distance shall be measured as the horizontal distance between the character and an obstruction preventing further approach towards the sign. Character height shall be based on the uppercase letter "I". § **11B-703.5.5 (See exception)**
   f. Visual characters shall be 40 inches minimum above the finish floor or ground. § **11B-703.5.6 (See exceptions)**
g. Stroke thickness of the uppercase letter "I" shall be 10 percent minimum and 20 percent maximum of the height of the character. **§11b-703.5.7**
h. Character spacing shall be measured between the two closest points of adjacent characters, excluding word spaces. Spacing between individual characters shall be 10 percent minimum and 35 percent maximum of character height. **§11B-703.5.8**
i. Spacing between the baselines of separate lines of characters within a message shall be135 percent minimum and 170 percent maximum of the character height. **§11B-703.5.9**
j. Text shall be in a horizontal format. **§11B-703.5.10**
5. Pictograms shall comply with the following:
   a. Pictograms shall have a field height of 6 inches minimum. Characters and Braille shall not be located in the pictogram field. **§11B-703.6.1**
   b. Pictograms and their fields shall have a non-glare finish. Pictograms shall contrast woth their field with either a light pictogram on a dark field or a dark pictogram on a light field. § **11B-703.6.2**
   c. Pictograms shall have text descriptors located directly below the pictogram field. Text descriptors shall comply with 11B-703.2 Raised Characters, 11B-703.3 Braille and 11B-703.4 Installation Height and Location. **§11B-703.6.3**
6. Symbols of accessibility and their background shall have a non-glare finish. Symbols of Accessibility shall contrast with their background with either a light symbol on a dark background or a dark symbol on a light background. **§11B-703.7.1**
7. Symbols shall comply with the following:
   a. The International Symbol of Accessibility shall comply with Figure 11B-703.7.2.1 ISA. The symbol shall consist of a white figure on a blue background. The blue shall be Color No. 15090 in Federal Standard 595B. **§11B-703.7.2.1 (See exception)**
   b. The International Symbol of TTY shall comply with Figure 11B-703.7.2.2.
   c. Telephones with a volume control shall be identified by a pictogram of a telephone handset with radiating sound waves on a square field such as shown in figure 11B-703.7.2.3.
   d. Assistive listening systems shall be identified by the International Symbol of Access for Hearing Loss complying with Figure 11B-703.7.2.4.
   e. Edges of signs shall be rounded chamfered or erased. Corners of signs shall have a minimum radius of 1/8 inch. **§11B-703.7.2.6.4**
E. SPECIAL ROOMS, SPACES, AND ELEMENTS
F. BUILT-IN ELEMENTS
DINING SURFACES AND WORK SURFACES
   (Note or show on the plans)
1. The tops of dining surfaces and work surfaces shall be 28 inches minimum and 34 inches maximum above the finish floor or ground. **§11B-902.3**
2. 2. Where food or drink is served for consumption at a counter exceeding 34 inches in height, a portion of the main counter **60 inches minimum in length** shall be provided in compliance with 11B-902.3. **§11B-226.3**

GENERAL ACCESSIBILITY 25

1. Exit signs shall be internally or externally illuminated. When the face of an exit sign is illuminated from an external source, it shall have an intensity of not less than 5-foot-candles (54 lux).(1011.3)
2. "Any time a building or a portion of a building is occupied, the means of egress serving the occupied portion shall be illuminated at an intensity of not less than 1-foot-candle (11 lux) at the walking surface level." (1006)
3. The power supply for means of egress illumination shall be provided by the premise's electrical supply. In the event of power supply failure, illumination shall be automatically provided from an emergency system for the following areas: (1006.3)
   a. Aisles in rooms and spaces that require two or more means of egress.
4. The exit signs shall also be connected to an emergency electrical system which is to provide continued illumination for a duration of not less than 1-1/2 hr. in case of primary power loss. Continued illumination is to be provided from storage batteries, unit equipment, or an on-site generator and the installation of the emergency power system shall be installed in accordance with Chapter 27. (1006.3)
5. Emergency lighting facilities shall be arranged to provide initial illumination that is at least an average of 1-foot-candle (11 lux) and a minimum at any point of 0.1-foot-candle (1 lux) measured along the path of egress at floor level. A maximum-to-minimum illumination uniformity ratio of 40 to 1 shall not be exceeded. (1006.3.1)
6. Where key-operated locking devices are used, post a sign on or adjacent to the required main exit door with 1-in. lettering stating: "THIS DOOR TO REMAIN UNLOCKED WHEN BUILDING IS OCCUPIED."
7. Egress doors shall be openable from the egress side without the use of a key, special knowledge, or effort. Manually operated flush bolts or surface bolts are not permitted. The unlatching of any door or leaf shall not require more than one operation. (1008.1.9)

GENERAL REQUIREMENTS
8. Note or show on the plans: Toilet and bathing room floors shall have a smooth, hard, nonabsorbent surface that extends upward onto the walls at least 4-in. (1210.2.1)
9. Note on the plans: on plans that interior finish materials applied to wall and ceilings shall be teted as specified in Section 803. In addition, provide details showing appliance in accordance with Section 803.1 and Table 803.9.
10. Note on the plans: The flame-spread index of interior wall, floor and ceiling finish must be per chapter 8.
11. Note on the plans the following security requirements:
   a. The unlatching of any door or leaf shall not require more than one operation. (1008.1.8.5)
   b. Door stops on wooden jambs for in-swinging doors shall be of one-piece construction with the jamb or joined by a rabbet. (6709.4)
   c. Use non-removable pins for hinges which are accessible from the outside when the door si closed. (6709.5)
   d. Use cylinder guards on cylinder locks whenever the cylinder projects beyond the outside face of the door or is otherwise accessible to attack tools. (6709.6)

MEANS OF EGRESS 17

TOILET AND BATHING ROOM CLEARANCES

1. COAT HOOKS SHALL BE LOCATED WITHIN ONE OF THE REACH RANGES SPECIFIED IN SECTION 11B-308. SHELEVES SHALL VBE LOCATED 40" MINIMUM AND 48"" MAXIMUM ABOVE THE FINISH FLOOR. PER 11B-603.4
2. DOOR SHALL NOT SWING INTO THE CLEAR FLOOR SPACE OR CLEARANCE REQUIRED FOR ANY FIXTURE. OTHER THAN THE DOOR TO THE ACCESSIBLE WATER CLOSET COMPARTMENT, A DOOR IN ANY POSITION, MAY ENCORACH INTO THE TURNIGN SPACE BY 12" MAXIMUM. PER 11B-603.2.3

WATER CLOSETS AND TOILET COMPARTMENTS

3. THE WATER CLOSET SEATS SHALL NOT BE SPRUNG THE RETURN TO A LIFTED POSITION. SEATS SHALL BE 2" HIGH MAXIMUM. PER 11B-604.4
4. FLUSH CONTROLS SHALL BE HAND OPERATED OR AUTOMATIC. HAND OPERATED FLUSH CONTROLS SHALL COMPLY WITH SECTION 11B-309.4 OPERATION EXCEPT THEY SHALL BE LOCATED 44" MAXIMUM ABOVE THE FLOOR. FLUSH CONTROLS SHALL BE LOCATD ONTHE OPEN SIDE OF THE WATER CLOSET. PER 11B-604.6
5. TOILET PAPER DISPENSER SHALL NOT BE OF A TYPE THAT CONTROLS DELIVERY OR THAT DOES NOT ALLOW CONTINUOUS PAPER FLOW. PER 11B-604.7 **GRAB BARS**
6. THE SPACE BETWEEN THE GRAB BARS AND PROJECTING OBJECTS BELOW AND AT THE ENDS SHALL BE 1 1/2" MINIMUM. THE SPACE BETWEEN THE GRAB BAR AND PROJECTING OBJECTS ABOVE SHALL BE 12" MINIMUM. PER 11B-609.3
7. GRAB BARS AND ANY WALL OR OTHER SURFACES ADJACENT TOT HE GRAB BAR SHALL BE FREE OF SHARP AND ABRASIVE ELEMENTS AND SHALL HAVE ROUNDED EDGES. PER 11B-609.5
8. GRAB BARS SHALL NOT ROTATE IN THEIR FITTINGS. PER 11B-609.6

ADA NOTES 19

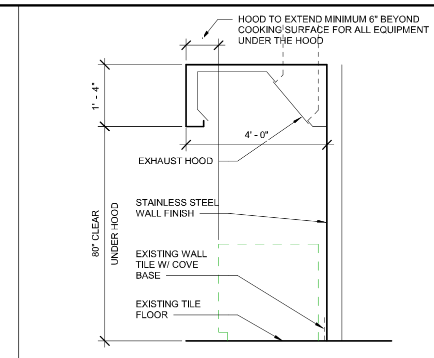

HOOD EXHAUST 11

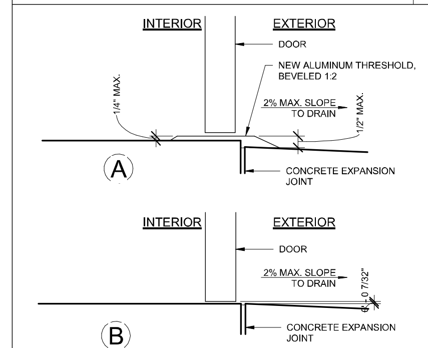

THRESHOLD 12

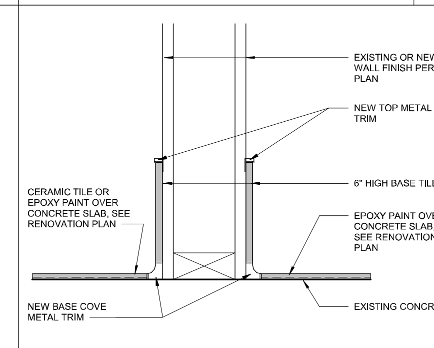

BASE TILE 13

AT OFFICE AREA 6 & B.L.L. STORAGE 7

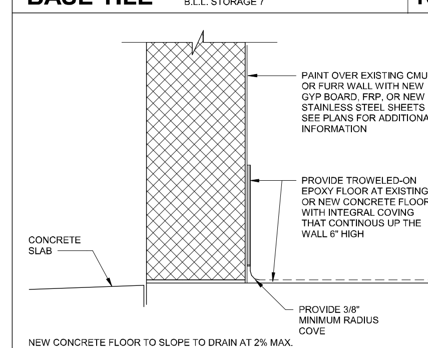

CMU WALL BASE 14

AT KITCHEN AREA 1 & WASH AREA 2

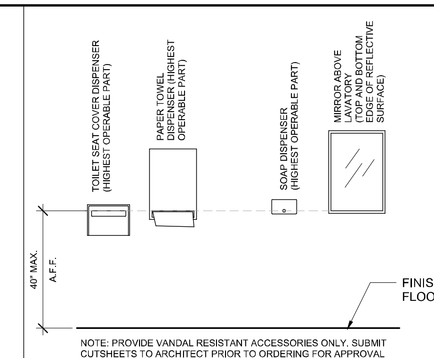

MOUNTING HEIGHTS 6

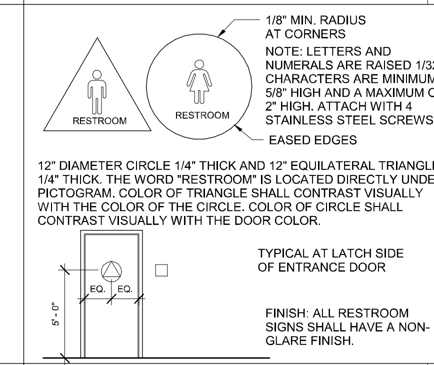

R.R. SIGN MEN & WOMEN 7

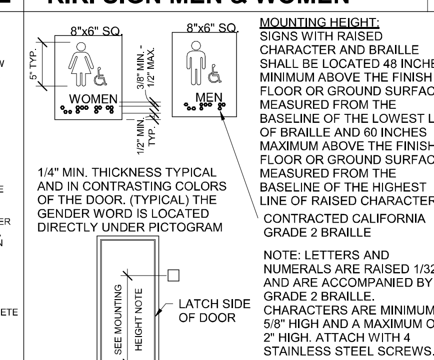

R.R. ROOM ID @ WALL 8

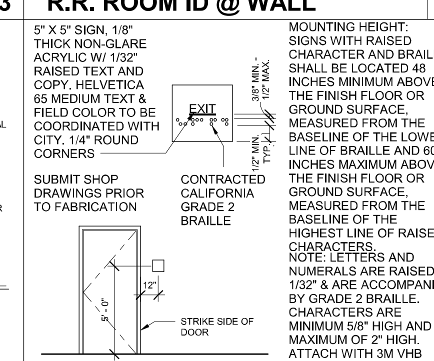

EXIT SIGN 9

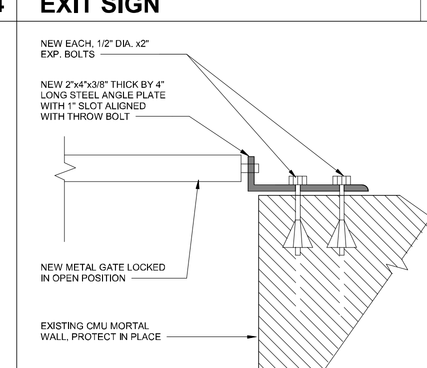

LATCH DETAIL 10

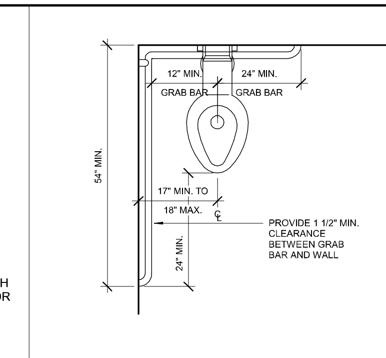

ACCS. R.R. STALL 1

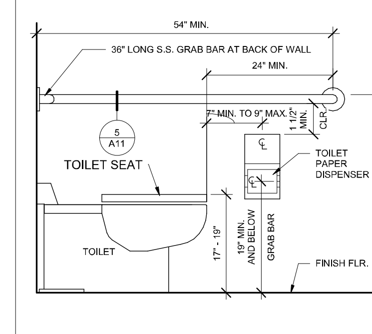

WATER CLOSET 2

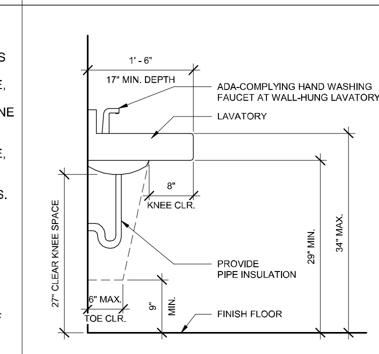

LAVATORY 3

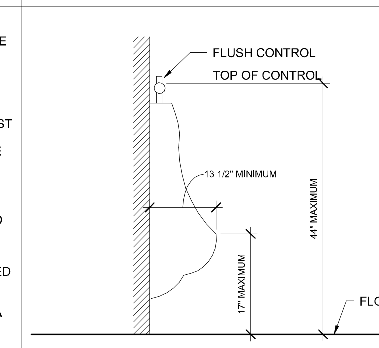

URINAL 4

SCALE: 1" = 1'-0"

LOCATE GRAB BARS ON EACH SIDE, OR ONE SIDE AND THE BACK, OF THE WATER CLOSET, 33 INCHES ABOVE AND PARALLEL TO THE FLOOR. GRAB BARS AT THE SIDE ARE TO BE AT LEAST 42 INCHES LONG WITH THE FRONT END POSITIONED 24 INCHES IN FRONT OF THE WATER CLOSET. GRAB BARS AT THE BACK CAN NOT BE LESS THAN 36 INCHES LONG. THE DIAMETER OR WIDTH OF THE GRIPPING SURFACE IS REQUIRED TO BE 1 1/2" O.D., OR THE SHAPE IS TO PROVIDE AN EQUIVALENT GRIPPING SURFACE. IF GRAB BARS ARE MOUNTED ADJACENT TO A WALL, THE SPACE BETWEEN THE WALL AND THE GRAB BARS IS TO BE 1 1/2 INCHES. GRAB BARS ARE TO RESIST 250 POUNDS OF DOWNWARD FORCE AND TORSION. GRAB BARS ARE TO BE MADE OF STAINLESS STEEL WITH A PINED SURFACE AND SNAP FLANGES OVER MOUNTING BOLTS.

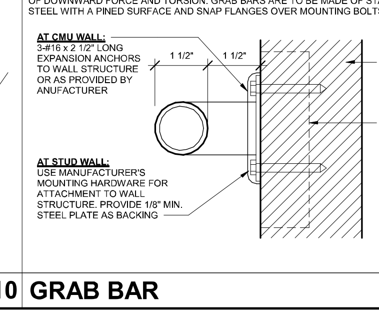

GRAB BAR 5

BOA
Architecture
Interiors
Planning
1511 Cota Ave. Long Beach, CA 90813 Tel. 562-912-7900

KESSLER PARK SNACK BAR
SNACK BAR, RESTROOM REMODEL & NEW SHADE STRUCTURE
18401 JURUPA AVE, BLOOMINGTON, CA 92316

No.	Date	Revision	By	Ck

Designer: Designer
CAD Draft: Author
Architect: Checker
Engineer:
Client: BLOOMINGTON CITY
Date Issue: 3-13-2023
Job Number: 2939

Client: BLOOMINGTON, CA 92316

Consultant:

LICENSED ARCHITECT
Edward Lok Ng
C-16840
REN.11/30/17
STATE OF CALIFORNIA

- ACCESSABILITY
- DETAILS
-

A11

These drawings and accompanying, as instruments of service, are the exclusive property of the Architect and their use and publication shall be restricted to the original site for which they were prepared. Re-use, reproduction or publication by any method, in whole or part, is prohibited by written permission from the Architect. Title to these plans and specifications shall remain with the Architect without prejudice, and visual with them shall constitute prima facie eveidence of acceptance of these restrictions.

G:\Project Files\2939 SB County SDD Kessler Park Snack Bar\01-Drawings\01-Revit\3-CD\Kessler Park Snack Bar_detached.rvt
3/13/2023 3:27:06 PM

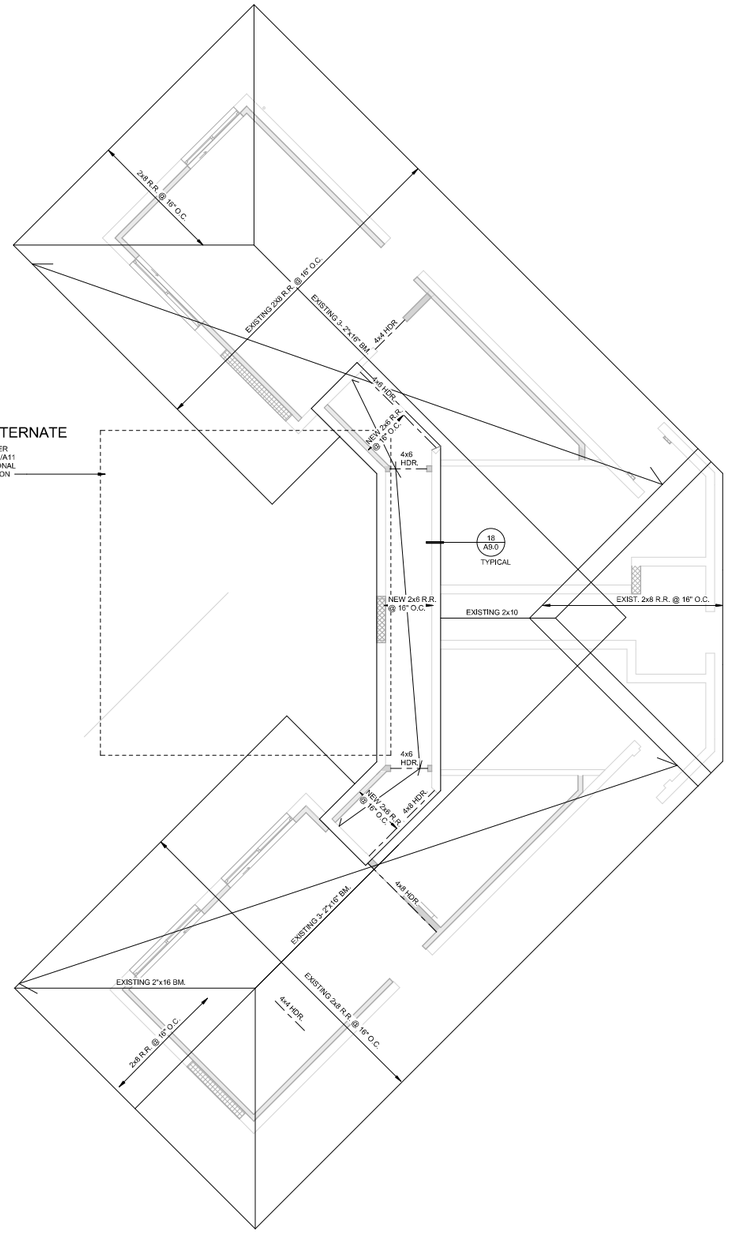

NOTE:
NEW ROOF EQUIPMENT SEE 11/A12 FOR DETAILS AND SEE MECHANICAL DRAWINGS FOR LOCATIONS

1 SNACK BAR FRAMING PLAN
SCALE: 1/4" = 1'-0"

N

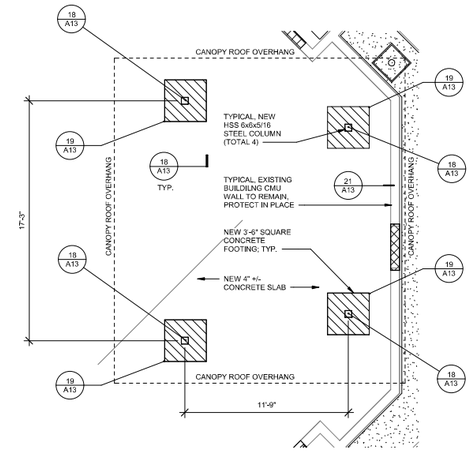

SEE 20/A12 FOR NEW CONCRETE SLAB WHERE OCCURS

2 SHADE FOUNDATION PLAN
SCALE: 1/4" = 1'-0"

N

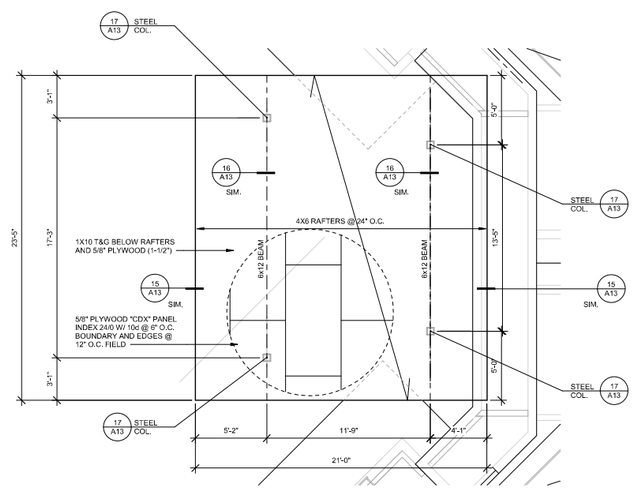

NOTES:
1. EXPOSED WOOD SHALL BE PRESSURE TREATED UNLESS COMPLETELY SEALED AGAINST WEATHER ELEMENT.
2. EXPOSED METAL CONNECTIONS, NAILS, SCREWS ETC. SHALL BE GALVANIZED AGAINST CORROSION.
3. DIAGONAL BRACING AT TOP OF COLUMNS SEE 22/A12

4 SHADE ROOF FRAMING PLAN
SCALE: 1/4" = 1'-0"

N

BID ALTERNATE

These drawings and accompanying, as instruments of service, are the exclusive property of the Architect and their use and publication shall be restricted to the original site for which they were prepared. Re-use, reproduction or publication by any method, in whole or part, is prohibited by written permission from the Architect. Title to these plans and specifications shall remain with the Architect, without prejudice, and issued with them shall constitute prima facie evidence of these restrictions.

G:\Project Files\2019 SB County SDO Kessler Park Snack Bar\0-Drawings\01-Revit\CAD\Kessler Park Snack Bar_detached.rvt
3/13/2023 2:27:08 PM

BOA Architecture Interiors Planning
1511 Cota Ave. Long Beach, CA 90813 Tel. 562-912-7900

KESSLER PARK SNACK BAR
SNACK BAR, RESTROOM REMODEL & NEW SHADE STRUCTURE
18401 JURUPA AVE, BLOOMINGTON, CA 92316

NO.	DATE	REV.	BY	CHK

Designer:	Designer
CAD Draft:	Author
Architect:	Checker
Engineer:	Approver
Client:	BLOOMINGTON CITY
Date Issue:	3-13-2023
Job Number:	2939

- FOUNDATION AND FRAMING
- PLANS
-

LICENSED ARCHITECT
Edward Lok Ng
C-16840
REN.11/30/21
STATE OF CALIFORNIA

BID ALTERNATE

A12

These drawings and accompanying, as instruments of service, are the exclusive property of the Architect and their use and publication shall be restricted to the original site for which they were prepared. Re-use, reproduction or publication by any method, in whole or part, is prohibited by written permission from the Architect. Title to these plans and specifications shall remain with the Architect without prejudice, and visual with them shall constitute prima facie eveidence of acceptance of these restrictions.

G:\Project Files\2939 SB County SDD Kessler Park Snack Bar\01-Drawings\01-Revit\3-CD\Kessler Park Snack Bar_detached.rvt
3/13/2023 3:27:11 PM

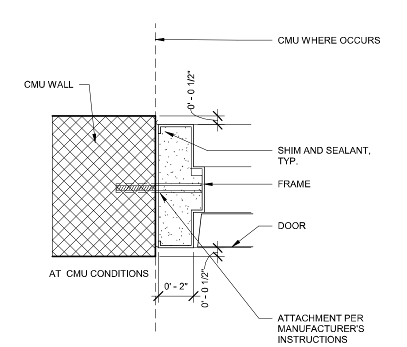

JAMB TO CMU SCALE: 3" = 1'-0" **26**

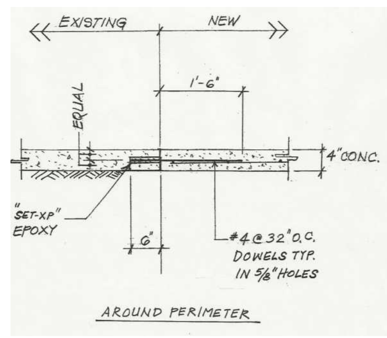

AROUND PERIMETER SLAB **21**

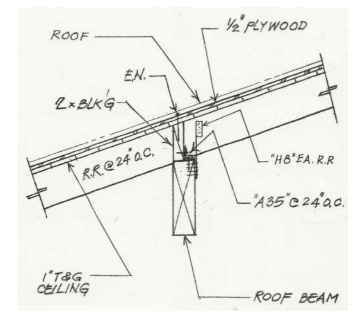

ROOF. **16**

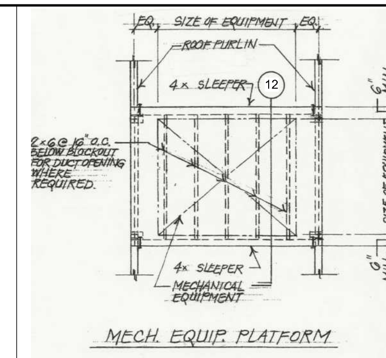

MECH. EQUIP. PLATFORM **11**

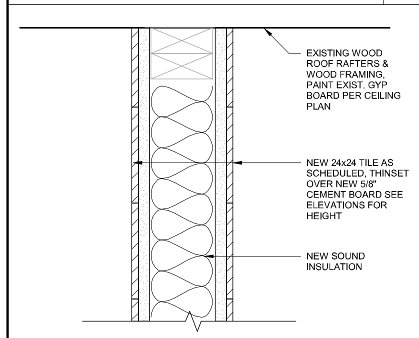

TILE AT UPPER WALL SCALE: 3" = 1'-0" **27**

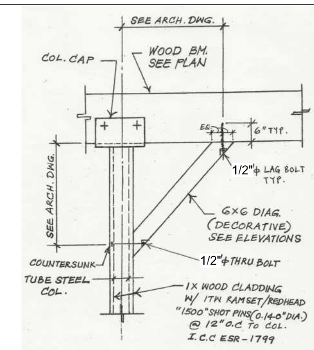

POST TO BEAM **22**

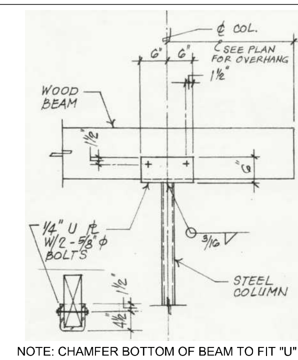

NOTE: CHAMFER BOTTOM OF BEAM TO FIT "U" ℙ

BEAM **17**

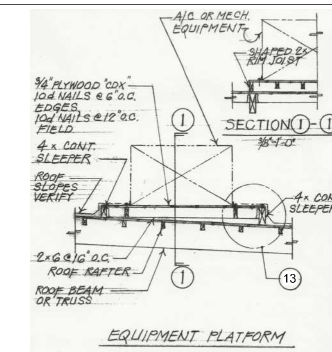

EQUIPMENT PLATFORM. **12**

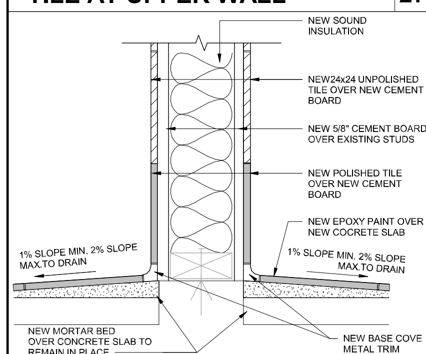

TILE AT WALL SCALE: 3" = 1'-0" **28**

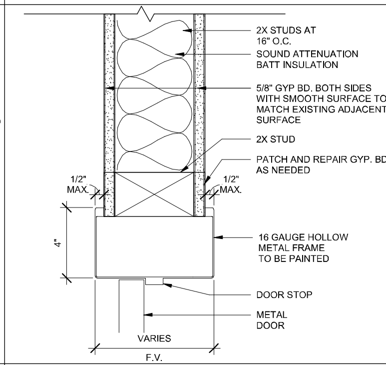

HEAD DETAIL SCALE: 3" = 1'-0" **23**

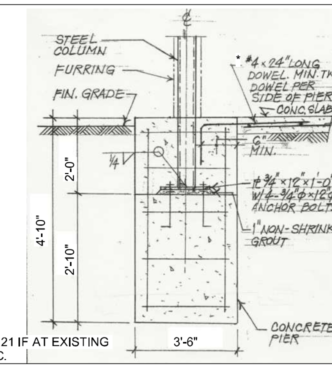

*SEE 21 IF AT EXISTING CONC.

FOOTING **18**

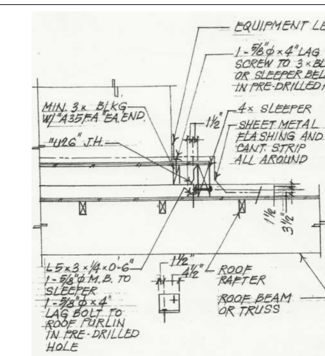

EQUIPMENT PLATFORM **13**

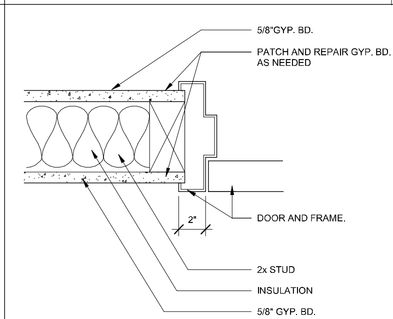

JAMB TO WOOD SCALE: 3" = 1'-0" **24**

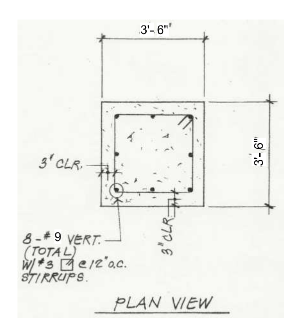

FOOTING PLAN **19**

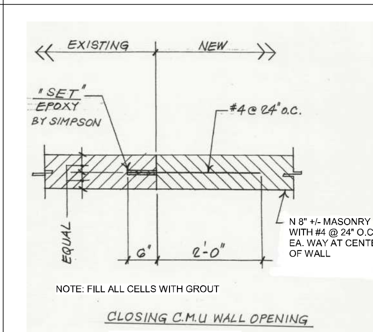

CLOSING CMU WALL OPENING **14**

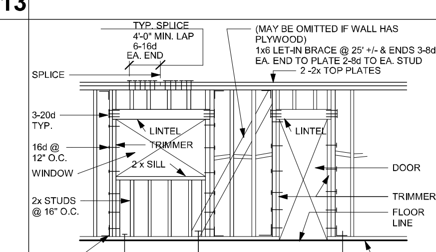

LINTEL SIZE SCHEDULE			
4" STUDS	6" STUDS	MAX ALLOW SPANS	TRIMMER
4x6	4x6	4'-0"	2x MIN.
4x6	6x6	6'-0"	2x MIN.
4x8	6x8	8'-0"	3x MIN.
4x10	6x10	10'-0"	3x MIN.
4x12	6x12	12'-0"	4x MIN.

UNLESS OTHERWISE NOTED OR DETAILED

FRAMING DETAIL **9**

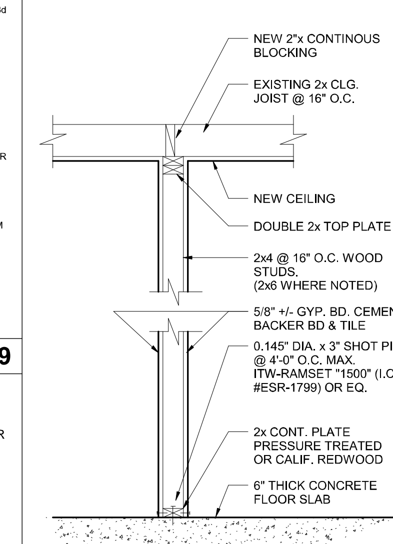

TYPICAL STUD WALL **5**

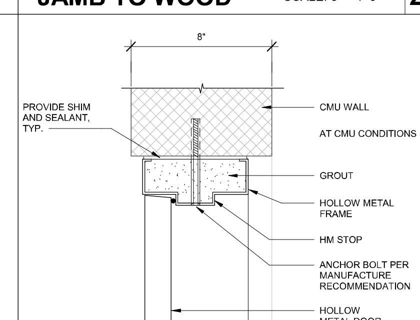

DOOR JAMB TO CMU SCALE: 3" = 1'-0" **25**

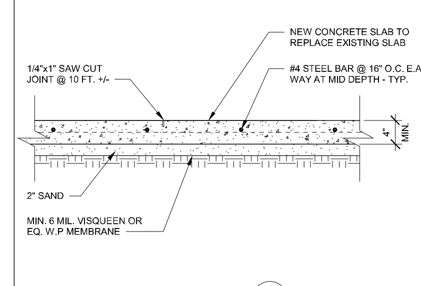

* SEE DETAIL FOR JOINTS AROUND PERIMETER (21/A13)

NOTE: SOIL & SAND SHALL BE COMPACTED TO 90% BEFORE RECEIVING CONCRETE.

CONCRETE SLAB **20**

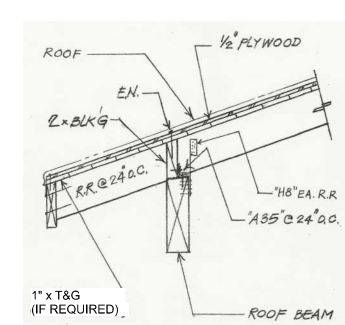

ROOF **15**

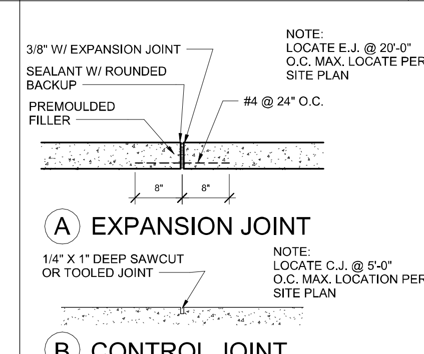

EXPANSION JOINT **10**

NAILING SCHEUDULE

1. JOIST TO SOIL OR GIRDER, TOE NAIL — 3-8d
2. BRIDGING TO JOIST, TOE NAIL EACH END — 2-8d
3. 1" X 6" SUBFLOOR OR LESS TO EACH JOIST, FACENAIL — 2-8d
4. WIDER THAN 1" X 6" SUBFLOOR TO EACH JOIST, FACE NAIL — 3-8d
5. 2" SUBFLOOR TO JOIST OR GIRDER, BLIND AND FACE NAIL — 2-16d
6. SOLE PLATE TO JOIST OR BLOCKING, FACE NAIL — 16d @ 16" 0.C.
7. TOP PLATE TO STUD, END NAIL — 2-16d
8. STUD TO SOLE PLATE — 4-8d, TOENAIL OR 2-16d, END NAIL
9. DOUBLE STUDS, FACE NAIL — 16d @ 24" O.C.
10. DOUBLE TOP PLATES, FACE NAIL — 16d @16" O.C.
11. TOP PLATES, LAPS AND INTERSECTIONS, FACE NAIL — 2-16d
12. CONTINUOUS HEADER, TWO PIECES — 16d @ 16" O.C. ALONG EACH EDGE
13. CEILING JOISTS TO PLATE, TOE NAIL — 3-8d
14. CONTINUOUS HEADER TO STUD, TOE NAIL — 4-8d
15. CEILING JOISTS, LAPS OVER PARTITIONS, FACE NAIL — 3-16d
16. CEILING JOISTS TO PARALLEL RAFTERS, FACE NAIL — 3-16d
17. RAFTER TO PLATE, TOE NAIL — 3-8d
18. 1" BRACE TO EACH STUD AND PLATE, FACE NAIL — 2-8d
19. 1" x 8" SHEATHING TO EACH BEARING, FACE NAIL — 2-8d
20. WIDER THAN 1" X 8" SHEATHING TO EACH BEARING, FACE NAIL — 3-8d
21. BUILT-UP CORNER STUDS — 16d @ 24" O.C.
22. DOUBLE TOP PLATES, LAP SPLICE — 8-16d
23. BLOCKING BETWEEN JOISTS OR RAFTERS TO TOP PLATES, TOE NAIL-- 3-8d
24. BUILT-UP GIRDER AND BEAMS — 20d @ 32" O.C. @ TOP AND BOTTOM AND STAGGERED 2-20d AT ENDS AND AT EACH SPLICE.
25. RIM JOIST TO TOP PLATE, TOE NAIL — 8d @ 6" O.C.

GENERAL

1. CONTRACTOR SHALL VERIFY ALL EXISTING CONDITIONS AND DIMENSIONS PRIOR TO COMMENCING WORK, REPORTING ANY DISCREPANCIES TO THE DESIGNER.
2. WRITTEN DIMENSIONS SHALL HAVE PRECEDENCE OVER SCALED DIMENSIONS ON THE DRAWINGS.
3. THE DRAWINGS ARE THE PROPERTY OF THE DISTRICT.
4. ALL WORKMANSHIP AND MATERIALS SHALL CONFORM TO THE LATEST EDITION OF CALIFORNIA BUILDING CODE.
5. UTILITY SERVICES: CONTRACTORS AND SUB-CONTRACTORS SHALL CONFIRM LOCATIONS OF UTILITIES AND NOTIFY ALL PERSONS WORKING ON SITE OF EXISTING UTILITIES. CONTRACTOR SHALL LOCATE AND IDENTIFY ACTIVE UTILITY SERVICES AND TEMPORARY DE-ACTIVATE THEM WHEN THEY CONSTITUTE A HAZARD. LOCATION OF GAS, ELECTRIC AND WATER METERS TO CONFORM WITH UTILITY COMPANY REQUIREMENTS.
6. PROTECT EXISTING CONSTRUCTION FINISHES, ADJACENT PROPERTY, PLANTING AND TREES. PROTECT THE WORK FROM RAIN AND OTHER NATURAL ELEMENTS. REPAIR, REFINISH, OR REPLACE ANY ITEMS DAMAGED DURING CONSTRUCTION.
7. TEMPORARY ELECTRIC AND WATER SERVICES FURNISHED AND PAID FOR BY THE CONTRACTOR.
8. CONTRACTOR SHALL PROVIDE TEMPORARY TOILET IN ACCORDANCE WITH LOCAL ORDINANCES IF NO EXISTING TOILET AVAILABLE ON SITE.
9. CONTRACTOR AGREES THAT HE SHALL ASSUME SOLE AND COMPLETE RESPONSIBILITY FOR JOB SITE CONDITIONS DURING THE COURSE OF CONSTRUCTION OF THIS PROJECT, INCLUDING SAFETY OF ALL PERSONS AND PROPERTY; THAT HIS REQUIREMENT SHALL APPLY CONTINUOUSLY AND NOT BE LIMITED TO NORMAL WORKING HOURS; AND THAT THE CONTRACTOR SHALL DEFEND, INDEMNIFY AND HOLD THE OWNER AND THE DESIGNER HARMLESS FROM ANY AND ALL LIABILITY, REAL OR ALLEGED, IN CONNECTION WITH THE PERFORMANCE OF WORK ON THIS PROJECT, EXCEPTING FOR LIABILITY ARISING FROM THE SOLE NEGLIGENCE OF THE OWNER OR THE DESIGNER.

CARPENTRY

1. ALL LUMBER SHALL BE NO. 2 GRADE MARKED DOUGLAS FIR LARCH FOR VERTICAL MEMBERS, HORIZONTAL MEMBERS AND STUDS, AND NO. 1 DOUGLAS FIR FOR BEAMS AND HEADERS INCLUDING 4 X POSTS OR LARGER. ALL LUMBER SHALL HAVE A MOISTURE CONTENT OF 19% OR LESS.
2. PLYWOOD SHALL CONFORM TO U.S. PRODUCT STANDARDS PS-I DOUGLAS FIR NO. 1 OR "CDX" WHEN NOTED ON DRAWINGS AND SHALL BE INSPECTED BEFORE BEING COVERED.
3. WOOD SILLS SHALL BE PRESSURE-TREATED DOUGLAS FIR, U.N.O. WHEN THEY ARE IN CONTACT WITH CONCRETE OR MASONRY WITHIN 48" OF THE GROUND.
4. GALVANIZED NAILS SHALL BE USED FOR EXTERIOR WOOD. ALL NAILS SHALL BE COMMON WIRE OR GALVANIZED BOX FOR SHEAR WALLS AND DIAPHRAGMS.
5. ALL FINISH WOOD, EXTERIOR AND INTERIOR, SHALL BE NAILED WITH FINISH NAILS AND COUNTERSUNK.
6. DO NOT CUT STRUCTURAL MEMBERS FOR PIPES, ETC., UNLESS SPECIFICALLY DETAILED OR STATED IN THE CODE.
7. FIRE STOPS: PROVIDE BLOCKING AT ALL INTERSECTIONS OF STUD WALLS TO FLOOR, STAIRS, CEILING, ROOF, AND FURRED SPACES.
8. ALL LUMBER SHALL BE DOUGLAS FIR LARCH TYPE.
9. PROVIDE STANDARD PLATE WASHERS FOR BOLTS BEAR ON WOOD. U.N.O.
10. JOISTS AND RAFTERS SHALL BE BLOCKED WITH 2 X @ 8'-0" O.C. MAX.
11. DOUBLE FLOOR JOISTS WHERE THEY ARE PARALLEL TO PARTITIONS.

CONCRETE

1. CONCRETE SHALL BE 3,500 PSI AT 28 DAYS, UNLESS NOTED OTHERWISE.
2. CONCRETE: 1 PART CEMENT, 2 1/2 PARTS SAND, AND 3 1/2 PARTS 3/4" DIA. ROCK. TOTAL WATER SHALL NOT EXCEED 7 GALLONS PER SACK OF CEMENT.
3. GROUT: 1 PART CEMENT, 3 PARTS SAND, 2 PARTS 3/8" DIA. MAXIMUM PEA GRAVEL OR APPROVED EQUAL.
4. CEMENT SHALL BE TYPE V PORTLAND "S" PER ASTM C-150.

REINFORCING STEEL

1. REINFORCED STEEL SHALL CONFORM TO ASTM A615, GRADE 40 FOR SIZES #3 AND #4 GRADE 60 FOR SIZES #5 AND LARGER.
2. WELDED FABRIC (MESH) SHALL CONFORM TO THE LATEST REVISED ASTM A185. SMOOTH WIRE FABRIC SHALL CONFORM TO ASTM A85 YIELD STRENGTH 60 KSI
3. ALL BARS IN MASONRY SHALL BE LAPPED A MINIMUM OF 40 BAR DIAMETERS (2'-0" MIN.) AT ALL SPLICES UNLESS NOTED OTHERWISE.
4. ALL BARS I N CONCRETE SHALL BE LAPPED A NIMINUM OF 36 BAR DIAMETERS (2'-0" MIN.) AT ALL SPLICES UNLESS NOTED OTHERWISE.
5. SPLICES OF HORIZONTAL REBAR IN WALLS AND FOOTINGS SHALL BE STAGGERED 4'-0" MINIMUM. ALL BENDING OF REINFORCING STEEL SHALL CONFORM TO THE LATEST EDITION OF CALIFORNIA BUILDING CODE.

STRUCTURAL STEEL

1. STRUCTURAL STEEL AND MISCELLANEOUS IRONSHALL CONFORM TO ASTM A36 UNLESS NOTED OTHERWISE.
2. STEEL PIPE COLUMNS AND OTHER STEEL PIPE STRUCTURAL MEMBERS SHALL CONFORM TO ASTM A53, GRADE B.
3. STRUCTURAL STEEL TUBING SHALL CONFORM TO ASTM A500, GRADE GRADE B, Fy = 46 KSI
4. ALL BOLTS SHALL CONFORM TO ASTM A307, UNLESS NOTED OTHERWISE. WHERE HIGH STRENGTH (H.S.) BOLTS CONFORMING TO ASTM A325 ARE SPECIFIED, INSTALLTION SHALL BE INSPECTED BY A REGISTERED DEPUTY INSPECTOR APPROVED BY THE BUILDING DEPARTMENT.
5. LIGHT GAUGE STRUCTURAL STEEL MEMBERS SHALL CONFORM TO A.S.T.M. STANDARDS A-446, GRADE A (GALVANIZED) OR A.S.T.M. A-570, GRADE C (HOT ROLLED) OR A.S.T.M. A-570, GRADE E (HOT ROLLED) OR A.S.T.M. A-607, GRADE 50.
6. FABRICATION AND ERECTION SHALL CONFORM TO A.I.S.C. SPECIFICATIONS.

WELDING

1. ALL WELDING SHALL BE DONE USING THE SHIELDED ELECTRIC ARC PROCESS BY CERTIFIED WELDERS, USING E70XX ELECTRODES.

2. WELDING OF STEEL REINFORCING BARS SHALL BE DONE WITH LOW HYDROGEN ELECTRODES, A233, CLASS E70XX SERIES. ALL REINFORCEMENT TO BE WELDED SHALL CONFORM TO A.S.T.M. A706 UNLESS APPROVED OTHERWISE.

3. WELDS IDENTIFIED AS REQUIRING CONTINUOUS OR PERIODIC SPECIAL INSPECTION NEED NOT HAVE SPECIAL INSPECTION WHEN WELDING IS DONE IN AN APPROVED FABRICATOR'S SHOP.

BOA°
Architecture
Interiors
Planning
1511 Cota Ave. Long Beach, CA 90813 Tel. 562-912-7900

KESSLER PARK SNACK BAR
SNACK BAR, RESTROOM REMODEL & NEW SHADE STRUCTURE
18401 JURUPA AVE, BLOOMINGTON, CA 92316

NO.	DATE	REV.	BY	CHK

Designer: Designer
CAD Draft: Author
Architect: Checker
Engineer: Approver
Client: BLOOMINGTON CITY
Date Issue: 3-13-2023
Job Number: 2939

- STRUCTURAL NOTES AND DETAILS
-
-

LICENSED ARCHITECT
Edward Lok Ng
C-16840
REN.11/30/21
STATE OF CALIFORNIA

A13

HEAT PUMP

MARK	MFGR & MODEL	TYPE	SERVICE	LOCATION	SUPPLY FAN				COOLING CAPACITY							HEATING CAPACITY			REFRIGERANT		ELECTRICAL		FILTERS			OSA CFM	OPER WT LBS	REMARKS
					AIRFLOW CFM	ESP INCHES WC	RPM	BHP	SENSIBLE CAPACITY MBH	TOTAL CAPACITY MBH	EAT EDB °F	EAT EWB °F	LAT LDB °F	LAT LWB °F	AMBIENT °F	EER (SEER)	OUTPUT MBH	AMBIENT °F	COP (HSPF)	TYPE	CHARGE LBS	FLA MCA MOCP	V / PH	TYPE	SIZE INCH	QUANTITY			
HP-1	CARRIER 50VRC24	ROOFTOP PACKAGE UNIT	KITCHEN	ROOFTOP	800	0.75	1/2	0.36	17.85	22.81	80	67	60	58	95	(15.0)	23.8	47	3.9 (8.2)	R-410A	8.2	16.4 19.3 30	208/1	THROW-AWAY	12x20x1	2	52	338	CONFIGURE FOR DOWN DISCHARGE CONFIGURATION; FURNISH WITH OUTSIDE AIR INTAKE, MICROPROCESSOR-BASED THERMOSTAT

MAKE-UP AIR UNIT

MARK	MANUFACTURER & MODEL	LOCATION	SERVICE	TYPE	AIRFLOW CFM	TSP IN W.C.	SUPPLY AIR				MOTOR			HEATING SECTION		ELECTRICAL	FILTERS IN...QTY	UNIT OPER WT LBS	REMARKS
							TSP	CFM	BHP	RPM	HP	V/PH	RPM	INPUT MBH	OUTPUT MBH	FLA MCA MOCP			
MUA-1	CAPTIVEAIRE A2-20D	ROOFTOP	MAKE-UP AIR	FILTERED EVAPORATIVE COOLING STATION	3100	0.5	0.5	3100	1.021	1245	2.0	208/3	1085	–	–	6.6 8.3 15	– –	715	FURNISH WITH SIDE DISCHARGE CONFIGURATION, CONTROLS (SWITCHING, FAN, PUMP) VIA INTERLOCKS INTEGRAL TO MANUFACTURER HOOD / EXHAUST FAN / MAKE-UP AIR SYSTEM

GREASE EXHAUST FAN

MARK	MFGR AND MODEL	LOCATION	SERVICE	FAN				MOTOR		ELECTRICAL	SONES	OPER WT LBS	REMARKS
				AIRFLOW CFM	ESP "WC	BHP	RPM	HP (WATTS)	V/PH	FLA MCA MOCP			
GEF-1	CAPTIVEAIRE DU180HFA	ROOFTOP	KITCHEN GREASE EXHAUST	3000	1.3	1.399	1265	2	208/3	8.3 10.4 15	19.1	183	FURNISH FOR UP BLAST DISCHARGE CONFIGURATION FOR DIRECT DRIVE AHUS, GREASE TROUGH AND TERMINATOR, RAISED VENTED CURB WITH HINGED BASE, DISCONNECT PER UL-705/762 LISTED INSTALLATION

KITCHEN HOOD

MARK	MFGR & MODEL	HOOD SIZE (LxWxH)	EXHAUST AIR / COLLAR SIZE	MAKE-UP AIR / COLLAR SIZE	OPER WT LBS	REMARKS
H-1	CAPTIVEAIRE 5412-SND-2	10'-0" x 4'-6" x 1-0"	3000 CFM 24"x24"	–	483	FURNISH TYPE I GREASE EXHAUST HOOD FOR 600° MAXIMUM COOKING TEMPERATURE (1 FRYER, 1 GRIDDLE, 1 BROILER, 1 COUNTERTOP ELECTRIC-HEATED PIZZA OVEN); FIRE SUPPRESSION (ANSUL) PROVIDED UNDER SEPARATE PERMIT; 0" CLEARANCE TO COMBUSTIBLES

DIFFUSERS, REGISTERS & GRILLES

MARK	MFGR AND MODEL	LOCATION	SERVICE	MOUNTING TYPE	MATERIAL	FRONT BLADES	OPPOSED BLADE DAMPER	REMARKS
CD-1	TITUS MCD	OFFICE	CEILING DIFFUSER	SURFACE MOUNTED	STEEL	MODULAR	YES	FURNISH IN WHTIE
RG-1	TITUS 50NT	STORAGE, OFFICE	RETURN GRILLE	SURFACE MOUNTED	STEEL	EGGCRATE	NO	FURNISH IN WHITE

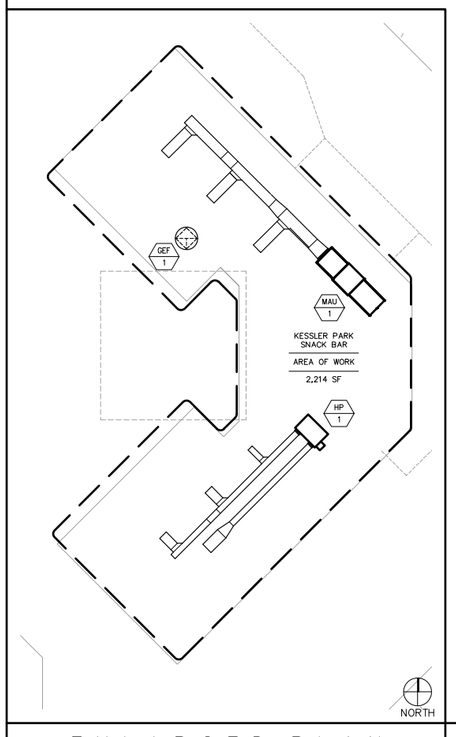

ENLARGED PLAN
SCALE: 1/8"=1'-0"

LEGEND

SYMBOL	DESCRIPTION
	ROUND DUCT RISER UP / DOWN
	SUPPLY / RETURN / EXHAUST DUCT RISER UP
	SUPPLY / RETURN / EXHAUST DUCT RISER DOWN
	CEILING DIFFUSER, RETURN GRILLE, EXHAUST GRILLE
X / X	EQUIPMENT CALLOUT
X / X-X	DETAIL CALLOUT
X	NOTE CALLOUT
CO2	CARBON DIOXIDE SENSOR
O	OCCUPANCY SENSOR
OV	OVERRIDE SWITCH
RH	RELATIVE HUMIDITY
S	SWITCH
SD	SMOKE DETECTOR
T	TEMPERATURE SENSOR / THERMOSTAT
TS	TIME SWITCH (SPRING WOUND)

LINETYPE

———	EXISTING (LIGHT)
———	NEW (DARK)
——RL——	REFRIGERANT LIQUID
——RS——	REFRIGERANT SUCTION

ABBREVIATIONS

(E)	EXISTING
(N)	NEW
(R)	RELOCATED
CFM	CUBIC FEET PER MINUTE
CD	CEILING DIFFUSER / CONDENSATE DRAIN
D	DRAIN
EC	EVAPORATIVE COOLER
EF	EXHAUST FAN
EG	EXHAUST GRILLE
HP	HEAT PUMP
MA	MAKE-UP AIR
RA	RETURN AIR
RG	RELIEF GRILLE
SA	SUPPLY AIR
SR	SUPPLY REGISTER
TG	TRANSFER GRILLE
UTR	UP THROUGH ROOF
WL	WALL LOUVER

SCOPE OF WORK

1. PROVIDE ROOFTOP-MOUNTED HEAT PUMPS FOR KITCHEN AND OFFICE, RESPECTIVELY
2. PROVIDE ROOFTOP MAKE-UP AIR UNIT, GREASE EXHAUST FAN FOR KITCHEN FACILITIES
3. PROVIDE DUCTWORK FOR ASSOCIATED SUPPLY AIR, RETURN AIR LINES TO POINTS OF USE
4. PROVIDE CONTROLS (THERMOSTAT, SWITCHING) FOR EQUIPMENT PROVIDED UNDER THIS SCOPE OF WORK
5. FIRE SUPPRESSION SYSTEM, ASSOCIATED EQUIPMENT AND HARDWARE NOT IN THIS SCOPE OF WORK

SHEET INDEX

M1.0	LEGEND, SCOPE OF WORK, SHEET INDEX, SCHEDULES, ENLARGED SITE PLAN
M1.1	PROJECT NOTES
M2.0	SITE PLAN
M2.1	DEMOLITION FLOOR, ROOF PLAN
M2.2	RENOVATION FLOOR, ROOF PLAN
M3.0	DETAILS
M3.1	DETAILS
M4.0	TITLE 24 – ENVELOPE, PROCESS SYSTEMS
M4.1	TITLE 24 – MECHANICAL
M5.0	CAPTIVEAIRE DETAILS

CONTRACTOR SHALL VERIFY AVAILABILITY OF ALL UTILITIES PRIOR TO INITIATION OF CONSTRUCTION

BOA Architecture Interiors Planning
1511 Cota Ave. Long Beach, CA 90813 Tel. 562-912-7900

KESSLER PARK SNACK BAR
SNACK BAR, RESTROOM REMODEL & NEW SHADE STRUCTURE
18401 JURUPA AVE, BLOOMINGTON, CA 92316

NO.	DATE	REVISIONS	BY	CHK

Designer: CMF
CAD Draft: JT
Architect: JK
Engineer: CMF
Client: BLOOMINGTON CITY
Date Issued: 03-1-2023
Job Number: 2939

• LEGEND, SCOPE OF WORK, • SHEET INDEX, SCHEDULES, • ENLARGED SITE PLAN

M1.0

Copyright © 2023 BOA Architecture Interiors Planning
These drawings and specifications are the property of the architect and may not be used on other projects or for other purposes without written consent of the architect.

PROJECT NOTES

1. GENERAL
   A. ADMINISTRATIVE
      1) BASIS OF WORK
         a. SCOPE OF WORK SHALL BE AS IDENTIFIED HEREIN THESE DRAWINGS ON SHEET M-1 FOR COMPLETE AND OPERABLE INSTALLATION OF PLUMBING SERVICES.
         b. ALL WORK SHALL COMPLY WITH THE FOLLOWING CODES AS ADOPTED AND AS AMENDED BY THE INSPECTING AUTHORITY:
            i) CALIFORNIA BUILDING CODE (2019).
            ii) CALIFORNIA ELECTRICAL CODE (2019).
            iii) CALIFORNIA MECHANICAL CODE (2019).
            iv) CALIFORNIA PLUMBING CODE (2019).
            v) CALIFORNIA ADMINISTRATIVE CODE -TITLE 24 (2019).
            vi) CALIFORNIA FIRE CODE (2019).
            vii) AMENDMENTS AS ADOPTED BY LOCAL AUTHORITIES.
         c. ALL EQUIPMENT AND HARDWARE SHALL BE PROVIDED FOR LISTED INSTALLATIONS AND APPLICABLE INDUSTRY STANDARDS. A COPY OF THE EVALUATION REPORT AND/OR CONDITIONS OF LISTING SHALL BE MADE AVAILABLE AT THE JOB SITE.
         d. ALL TERMS CITED HEREIN LEND TO THE MECHANICAL CONTRACTOR, WHETHER ACTING AS A PRIME CONTRACTOR OR AS A SUB CONTRACTOR. HEREINAFTER, THE HVAC CONTRACTOR IS REFERRED TO AS THE CONTRACTOR, AND REQUIREMENTS OF THESE NOTES SHALL DIRECT SAID CONTRACTOR TO ACCOMPLISH TASKS AS CITED HEREIN.
         e. ALL EQUIPMENT AND HARDWARE SHALL BE PROVIDED FOR LISTED INSTALLATIONS AND APPLICABLE INDUSTRY STANDARDS. A COPY OF THE EVALUATION REPORT AND/OR CONDITIONS OF LISTING SHALL BE MADE AVAILABLE AT THE JOB SITE.
      2) CONTRACTURAL OBLIGATIONS
         a. NOT USED
         b. APPLY FOR AND OBTAIN ALL NECESSARY CONSTRUCTION PERMITS REQUIRED BY ALL APPLICABLE BUILDING CODES AND REGULATORY REQUIREMENTS OF CITY AND STATE. FOR CONTRACTOR'S EXPENSE OF SECURING PERMITS (AS AGREED TO), SUBMIT TO OWNER FOR REIMBURSEMENT OF COST OF PERMITS AND ASSOCIATED FEES AS CHARGED BY CITY (AND / OR ASSOCIATED JURISDICTIONS).
         c. PROVIDE A LIST OF SUBCONTRACTORS TO ARCHITECT PRIOR TO THE START OF WORK.
      3) BIDDING
         a. DURING PRICING PERIOD, CONFIRM IN WRITING THE APPROXIMATE ON-SITE DELIVERY DATES FOR ALL CONSTRUCTION MATERIALS AS REQUIRED BY THE CONSTRUCTION DOCUMENTS AND NOTIFY ARCHITECT IN WRITING OR ANY POSSIBLE CONSTRUCTION DELAYS AFFECTING OCCUPANCY THAT MAY ARISE DUE TO THE UNAVAILABILITY OF SPECIFIED PRODUCTS.
         b. UPON SUBMITTAL OF THE FINAL CONSTRUCTION COSTS, SUBMIT A SPECIFIC CONSTRUCTION SCHEDULE INDICATING THE REQUIRED CONSTRUCTION TIME FOR ALL SUBCONTRACTORS AND CONTRACTOR'S WORK.
         c. SUBSTITUTIONS MAY BE CONSIDERED AT THE DISCRETION OF THE OWNER AND AS SPECIFIED HEREIN. ALL SUBSTITUTION MUST BE APPROVED IN WRITING BY THE ARCHITECT PRIOR TO ANY ORDER PLACEMENT OR PURCHASE. ANY SUBSTITUTION INSTALLED WITHOUT APPROVAL WILL BE REJECTED AND REPLACED AT CONTRACTOR'S EXPENSE.
         d. ACCOUNT FOR ADDITIONAL OFFSETS, FITTINGS, HARDWARE, ET AL AS NECESSARY TO ACCOMMODATE REQUIREMENTS FOR FIELD CONDITIONS AND COORDINATION BETWEEN DISCIPLINES.
         e. INCLUDE ALL NECESSARY LABOR, TRANSPORTATION AND EQUIPMENT NECESSARY TO INSTALL SUCH WORK.
         f. ACCOUNT FOR ANY AND ALL OVERTIME COSTS.
      4) SUBMITTALS
         a. SUBMIT SHOP DRAWINGS, AND / OR DESCRIPTIVE DATA AND SAMPLES OF ALL EQUIPMENT, FIXTURES, HARDWARE, FINISHES, MILLWORK, ET AL FOR APPROVAL BY THE ARCHITECT PRIOR TO INSTALLATION.
         b. ADDITIONAL REQUIREMENTS FOR SUBMITTAL INFORMATION IS PROVIDED HEREINAFTER.
      5) RECEIVING AND STORAGE
         a. RECEIVE, STORE AND SECURE ALL EQUIPMENT, FIXTURES, HARDWARE, FINISHES, MILLWORK, ET AL ON SITE OR AS OTHERWISE ARRANGED FOR BY CONTRACTOR.
      6) GUARANTEE
         a. PROVIDE ONE YEAR GUARANTEE TO CONTRACTOR ON PARTS AND LABOR EXCEPT AS OTHERWISE SPECIFIED HEREIN.
2. PRODUCTS
   A. EQUIPMENT
      1) MANUFACTURER
         a. CARRIER ROOTFOP PACKAGE HP'S
         b. CAPTIVEAIRE GREASE EXHAUST FAN
      2) APPROVED EQUAL
         a. YORK, TRANE (AS APPROVED, FOR PHYSICAL CONSTRAINTS OF INSTALLATION).
         b. GREENHECK, LOREN COOK (AS APPROVED, FOR PHYSICAL CONSTRAINTS OF INSTALLATION).
   B. HARDWARE
      1) DUCT SUPPORTS
         a. SUPPORT ALL SUPPORT AND BRACING OF METAL AND FLEXIBLE DUCTWORK ACCORDANCE WITH CMC 603.0, AND / OR SMACNA HVAC DUCT CONSTRUCTION STANDARDS -METAL AND FLEXIBLE AND / OR AS DETAILED AND SPECIFIED HEREIN.
         b. ATTACH ALL SUPPORT AND BRACING OF PIPING TO STRUCTURE (ROOF OR FLOOR FRAMING OR SLAB) VIA HARDWARE AS FOLLOWS:
            i) ANCHOR BOLTS.
            ii) LAG BOLT / SCREW.
            iii) OR AS OTHERWISE APPROVED IN WRITING.
            iv) VERTICAL ATTACHMENT WITH PULL-OUT CAPABILITY IS NOT ALLOWED.
         c. SUPPORT SHALL BE PROVIDED VIA HARDWARE AS FOLLOWS:
            i) SHEET METAL STRAP.
            ii) UNITSTRUT (FOR TRAPEZE SUPPORTS).
            iii) AND / OR AS DETAILED AND SPECIFIED HEREIN.
         d. PROVIDE INTERIM HARDWARE AS FOLLOWS:
            i) BEAM CLAMP.
            ii) ANGLE CLIP.
            iii) MANUFACTURED PLATE AND COLUMN HARDWARE.
            iv) FIELD-FABRICATED PLATE AND COLUMN HARDWARE.
            v) MANUFACTURED SLEEPER HARDWARE.
            vi) FIELD-FABRICATED SLEEPER HARDWARE.
            vii) THREADED RODS.
            viii) AND / OR AS DETAILED AND SPECIFIED HEREIN.
      2) DUCT INSULATION: WRAP AND LINING (SA, RA)
         a. WRAP: 1-1/2", 3/4# PCF INSULATION, U=0.27 AT 50°F (ASTM C 177), WITH FSK VAPOR BARRIER AND 2" STAPLING FLANGE.
         b. LINING: 1" FOR INTERIOR INSTALLATION OR 2" FOR EXTERIOR INSTALLATIONS, U=0.24 @ 75°F (ASTM C518), MAXIMUM VELOCITY 6000 FPM. INSTALL WITH 100% ADHESIVE COVERAGE, AND PINS PER SMACNA.
         c. ALL PRODUCTS TO HAVE A 25 FLAME / 50 SMOKE DEVELOPED RATING WHEN TESTED IN ACCORDANCE WITH ASTM E 84, NFPA 255, UL723.
         d. DUCT INSULATION AND LINING SHALL BE INSTALLED IN COMPLIANCE WITH CHAPTER 6 OF THE UNIFORM MECHANICAL CODE AND TITLE 24.
      3) DUCT INSULATION: WRAP (GEF)
         a. WRAP: 3M FIRE BARRIER DUCT WRAP 615+
      4) DUCTWORK (SA, RA, MUA)
         a. METAL DUCTS: COMPLY WITH SMACNA HVAC DUCT CONSTRUCTION STANDARDS -METAL AND FLEXIBLE, TO INCLUDE DUCTS, PLENUMS, METAL FITTINGS.
         b. FLEXIBLE DUCTS: SHALL COMPLY WITH UL181 AND SMACNA HVAC DUCT CONSTRUCTION STANDARDS -METAL AND FLEXIBLE.
      5) DUCTWORK (GEF)
         a. STAINLESS STEEL, 18 GAGE MINIMUM THICKNESS, WELDED CONSTRUCTION
   C. CONTROLS
      1) HEAT PUMP
         a. PROVIDE MICROPROCESSOR-BASED THERMOSTAT CONTROL WITH SCHEDULING AND NETWORKING AND REMOTE COMMUNICATION CAPABILITY.
      2) HOOD / GREASE EXHAUST FAN / MAKE-UP AIR UNIT
         b. PROVIDE CONTROLS (SWITCHING, FAN, PUMP) VIA INTERLOCKS INTEGRAL TO MANUFACTURER HOOD / EXHAUST FAN / MAKE-UP AIR SYSTEM
3. EXECUTION
   A. GENERAL
      1) DOCUMENTATION
         a. ALL ABBREVIATIONS USED ON DRAWINGS ARE CONSIDERED TO BE CONSTRUCTION STANDARDS. IF THE CONTRACTOR HAS QUESTIONS REGARDING THEIR EXACT MEANING, ARCHITECT SHALL BE NOTIFIED FOR CLARIFICATION.
         b. DRAWINGS ARE DIAGRAMMATIC IN NATURE, AND DO NOT ACCOUNT FOR EVERY ASPECT OF INSTALLATION AS NECESSARY TO ACCOMMODATE FIELD CONDITIONS. CONTRACTOR SHALL CHECK CONTRACT DOCUMENTS, FIELD CONDITIONS, DIMENSIONS, AND SCALES FOR ACCURACY AND CONFIRMING THAT WORK IS BUILDABLE AS SHOWN FOR A COMPLETE AND OPERABLE AND OPERATIONAL INSTALLATION PRIOR TO PROCEEDING WITH CONSTRUCTION. CONTRACTOR TO REVIEW AND BECOME FAMILIAR WITH ALL EXISTING CONDITIONS PRIOR TO COMMENCING WORK.
         c. ANY CONDITIONS NOT DOCUMENTED ON THESE DRAWINGS OR OBSERVED TO BE DIFFERENT THAN THOSE SHOWN ON THE DRAWINGS ARE TO BE REPORTED TO THE ARCHITECT PRIOR TO COMMENCING WORK.
         d. DO NOT SCALE DRAWINGS. IF THERE ARE ANY QUESTIONS REGARDING THESE OR OTHER COORDINATION ISSUES, THE CONTRACTOR SHALL CLARIFY WITH OWNER'S REPRESENTATIVE PRIOR TO PROCEEDING WITH WORK IN QUESTION OR RELATED WORK.
         e. VERIFY ALL DIMENSIONS SHOWN ON DRAWINGS BY FIELD MEASUREMENTS. BEFORE COMMENCING WORK, CHECK ALL LINES AND LEVELS INDICATED. IMMEDIATELY REPORT DISCREPANCIES TO THE OWNER'S REPRESENTATIVE FOR CORRECTION AND ADJUSTMENT. PROVIDE PROPER FIT AND ATTACHMENT OF ALL PARTITIONS AND CONSTRUCTION MATERIALS.
         f. ALL DIMENSIONS NOTED "MINIMUM", "CLEAR", OR "VERIFY" ARE TO BE CONFIRMED BY THE CONTRACTOR PRIOR TO CONSTRUCTION. ANY VARIANCES ARE TO BE REPORTED TO THE ARCHITECT IMMEDIATELY FOR RESOLUTION. "SIMILAR" MEANS COMPARABLE CHARACTERISTICS FOR THE TERMS NOTED. VERIFY DIMENSIONS AND ORIENTATION ON PLAN. NOTED DIMENSIONS SHALL TAKE PRECEDENCE OVER SCALED ONES.
         g. ALL PARTITIONS ARE DIMENSIONED FINISH TO FINISH UNLESS NOTED OTHERWISE.
         h. ADVISE OWNER'S REPRESENTATIVE OF ALL CONFLICTS THAT EXIST AT THE LOCATIONS OF ALL OF THE MECHANICAL, TELEPHONE, ELECTRICAL, LIGHTING, PLUMBING AND SPRINKLER EQUIPMENT (TO INCLUDE ALL PIPING, DUCTWORK AND CONDUITS). PROVIDE OWNER'S REPRESENTATIVE WITH ALL REQUIRED CLEARANCES FOR INSTALLATION AND MAINTENANCE OF THE ABOVE EQUIPMENT.
         i. KEEP A PROJECT RECORD SET CONSISTING OF DRAWINGS MARKING ALL CHANGES TO THE ORIGINAL DRAWINGS THROUGHOUT THE COURSE OF THE PROJECT. DELIVER "MARKED-UP" REPRODUCIBLE COPY TO ARCHITECT AT THE COMPLETION OF THE PROJECT.
      2) STANDARD OF CARE
         a. REVIEW AND BECOME FAMILIAR WITH ALL EXISTING CONDITIONS PRIOR TO COMMENCING WORK. ANY CONDITIONS NOT DOCUMENTED ON THESE DRAWINGS OR OBSERVED TO BE DIFFERENT THAN THOSE SHOWN ON THE DRAWINGS ARE TO BE REPORTED TO THE ARCHITECT PRIOR TO COMMENCING WORK.
         b. IF ANY MATERIALS OR PRODUCTS ARE INSTALLED WITHOUT FIRST PROVIDING THE REQUIRED SUBMITTALS OR SHOP DRAWINGS FOR APPROVAL, THOSE MATERIALS OR PRODUCTS ARE SUBJECT TO BEING REMOVED AND CORRECTLY REINSTALLED AT FULL COST TO THE CONTRACTOR.
         c. WORK SHALL BE COMMENSURATE TO FINISHED CONDITIONS WITHIN SPACE AND / OR STRUCTURE, AND / OR TO STANDARDS ESTABLISHED IN COMMENSRUATE TERMS.
         d. NO WORK, DEFECTIVE IN CONSTRUCTION OR QUALITY OR DEFICIENT IN ANY REQUIREMENTS OF THE DRAWINGS OR NOTES, WILL BE FOUND ACCEPTABLE IN CONSEQUENCE OF THE OWNER'S OR ARCHITECT'S FAILURE TO DISCOVER OR POINT OUT DEFECT AND DEFICIENCIES DURING CONSTRUCTION. DEFECTIVE WORK REVEALED WITHIN THE TIME REQUIRED BY GUARANTEES SHALL BE REPLACED BY WORK CONFORMING WITH THE INTENT OF THE CONTRACT. NO PAYMENT, EITHER PARTIAL OR FINAL, SHALL BE CONSTRUED AS AN ACCEPTANCE OF DEFECTIVE WORK OR IMPROPER MATERIALS.
         e. WORK WHICH CREATES NOXIOUS ODORS SHALL BE PERFORMED AT A TIME OF AGREEABLE WITH, AND COORDINATED THROUGH THE OWNER'S REPRESENTATIVE AND PER JURISDICTIONAL/GOVERNMENTAL REQUIREMENTS.
         f. PROVIDE AN EMERGENCY POWER SOURCE FOR EXIT AND EXIT WAY ILLUMINATION.
         g. KEEP ALL BUILDING AREAS CLEAN AND FREE OF ACCUMULATED DIRT AND DEBRIS. AT THE COMPLETION OF CONSTRUCTION, THE CONTRACTOR SHALL REMOVE ANY SURPLUS MATERIALS, DEBRIS AND EQUIPMENT.
      3) COORDINATION OF CONSTRUCTION EFFORT
         a. ORDER ALL MATERIALS IN TIME TO MAINTAIN THE APPROVED CONSTRUCTION SCHEDULE.
         b. COORDINATE SCHEDULE WITH ALL CONTRACTORS, OWNER'S VENDORS, AND PARTIES INSTALLING ITEMS 'NOT IN CONTRACT AND ITEMS 'PROVIDED BY OTHERS'.
         c. THE CONTRACTOR SHALL COORDINATE SCHEDULE FOR ALL SUBCONTRACTORS, OWNER'S VENDORS, AND PARTIES INSTALLING ITEMS 'NOT IN CONTRACT' AND 'ITEMS 'PROVIDED BY OTHERS'.
         d. ORDER MATERIALS IN TIME TO MAINTAIN THE APPROVED CONSTRUCTION SCHEDULE.
         e. COORDINATE INSTALLATION OF ALL WORK FOR THE LAYOUT AND EXACT LOCATION OF ALL CEILINGS AND WALLS AND PARTITIONS, OPENINGS FOR DOORS AND WINDOWS, LIGHT FIXTURES. ELECTRICAL / TELEPHONE OUTLETS AND LIGHT SWITCHES, HVAC EQUIPMENT AND HARDWARE, PLUMBING EQUIPMENT AND FIXTURES AND HARDWARE AND SERVICES WITH ALL CONTRACTORS.
         f. COORDINATE INSTALLATION OF ALL WORK BY THE OWNER'S VENDORS (I.E. SITE / CIVIL / UTILITIES, SIGNAGE, FIRE / LIFE SAFETY, DATA CABLING, SECURITY SYSTEM, AUDIO VISUAL, ET AL) WITH OTHER TRADES.
         g. COORDINATE INSTALLATION OF ALL WORK BY SUBCONTRACTORS FOR THE LAYOUT AND EXACT LOCATION OF ALL CEILINGS AND WALLS AND PARTITIONS, OPENINGS FOR DOORS AND WINDOWS, LIGHT FIXTURES. ELECTRICAL / TELEPHONE OUTLETS AND LIGHT SWITCHES, HVAC EQUIPMENT AND HARDWARE, PLUMBING EQUIPMENT AND FIXTURES AND HARDWARE AND SERVICES WITH OWNER'S REPRESENTATIVE IN THE FIELD.
         h. COORDINATE INSTALLATION OF ALL WORK BY THE OWNER'S VENDORS (I.E. SITE / CIVIL / UTILITIES, SIGNAGE, FIRE / LIFE SAFETY, DATA CABLING, SECURITY SYSTEM, AUDIO VISUAL, ET AL) WITH OTHER TRADES.
         i. COORDINATE THE INSTALLATION OF ITEMS 'NOT IN CONTRACT' AND ITEMS 'PROVIDED BY OTHERS' WITH OTHER TRADES.
      4) PLACEMENT OF EQUIPMENT AND HARDWARE
         a. ALL DIMENSIONS NOTES "CLR" ARE CLEAR AND ARE NOT ADJUSTABLE WITHOUT APPROVAL FROM ARCHITECT.
         b. ALIGN ALL PARTITIONS ADJACENT TO BASE BUILDING COLUMNS OR WALL WITH THE FACE OF FINISHED COLUMN SURFACE, UNLESS NOTED OTHERWISE.
         c. DIMENSIONS ARE NOT ADJUSTABLE WITHOUT REVIEW BY ARCHITECT UNLESS NOTED OTHERWISE.
         d. ARRANGE AND PLACE ALL FRAMING MEMBERS TO PERMIT INSTALLATION OF PIPE, CONDUITS, AND DUCTWORK WITH MINIMAL CUTTING. ALL NECESSARY CUTTING, BLOCKING, BRACING, SUPPORTING AND REPAIRING SHALL BE APPROVED BY OWNER'S REPRESENTATIVE.
         e. ARRANGE CEILING MOUNTED FIXTURES AND HARDWARE PER THE REFLECTED CEILNG PLAN PROVIDED AS PART OF THE ARCHITECTURAL PLANS.
         f. PROVIDE ACCESS TO AND CLEARANCE AROUND ALL EQUIPMENT AND HARDWARE AS REQUIRED BY CODE AND BY EQUIPMENT MANCUFACTURER.
         g. PROVIDE ACCESS PANELS IN LOCATIONS AS REQUIRED FOR HARDWARE REQUIRING ACCESS.
      5) INTEGRITY OF CONSTRUCTION
         a. X-RAY SLABS AND WALLS IN LOCATIONS OF PENETRATIONS PRIOR TO SAW CUTTING OR CORING.
         b. MAINTAIN AND / OR MODIFY AND / OR PROVIDE NEW STRUCTURAL CONSTRUCTION. ANCHOR AND BRACE EQUIPMENT, HARDWARE, ASSEMBLIES, ELEMENTS OF CONSTRUCTION, ET AL AS REQUIRED BY CODE.
         c. PROVIDE INSTALLATIONS PLUMB AND CRAFTSMAN LIKE, TO PROVIDE FOR MAXIMUM CLEARANCES AND MINIMUM IMPOSITION, AND COMMENSURATE WITH EXISTING CONDITIONS AND / OR GRADE OF CONSTRUCTION OF OVERALL JOB.
         d. DO NOT BORE OR NOTCH STRUCTURAL ELEMENTS WITHOUT WRITTEN AUTHORIZATION FROM OWNER'S REPRESENTATIVES.
         e. PROVIDE EQUIPMENT, HARDWARE, AND TREATMENTS WHERE NEW INSTALLATIONS PENETRATE NEW OR EXISTING RATED ELEMENTS OF CONSTRUCTION.
         f. MAINTAIN AND / OR MODIFY AND / OR PROVIDE NEW FIRE SUPPRESSION AND FIRE ALARM SYSTEMS AS REQUIRED BY CODE.
   B. EQUIPMENT
      1) PROVIDE HVAC EQUIPMENT (TO INCLUDE ASSOCIATED MECHANICAL HARDWARE, SUPPORTS, FASTENERS, BLOCKING AND BACKING, AND CONTROLS AND LOW VOLTAGE CONDUIT AND WIRING) AS REQUIRED FOR COMPLETE INSTALLATION.
      2) VERIFY EQUIPMENT DIMENSIONS AND ASSOCIATED SIZES OF PLATFORMS AND CURBS AND MOUNTING REQUIREMENTS FOR SLAB POURS, ROOF FRAMING, AND ASSOCIATED ELEMENTS OF CONSTRUCTION.
      3) VERIFY SERVICE REQUIREMENTS OF EQUIPMENT AS SUBMITTED FOR AVAILABLE VOLTAGE AND PHASE, AS PROPOSED FOR INSTALLATION HEREIN. IDENTIFY DISCREPANCY IN WRITING IN COURSE OF SUBMITTAL AND PROCUREMENT PROCESS.
      4) INSTALL EQUIPMENT LEVEL AND PLUMB, AND IN A CRAFTSMANSHIP LIKE MANNER.
      5) COORDINATE CLEARANCE REQUIREMENTS FOR PERMANENT ELEMENTS OF CONSTRUCTION, AND FOR EQUIPMENT AND HARDWARE AS INSTALLED AS PART OF THE PROJECT.
   C. HARDWARE
      1) DUCT SUPPORTS
         a. COORDINATE HEIGHT OF INSTALLATION OF HARDWARE TO ACCOMMODATE REQUIREMENTS FOR SURROUNDINGS (I.E. WITHIN SPACE AND ON SLAB AND ON ROOF).
         b. PROVIDE INSULATON AND INSERTS AND SADDLES AT PIPE SUPPORTS.
         c. PROVIDE INSULATION / INSERTS TO ISOLATE DISSIMILAR METALS.
         d. SUPPORT DUCTWORK EXPOSED IN SPACE VIA THREADED RODS, AND GAGE METAL STRAPS CINCHED TIGHT TO DUCT. INSTALL MEASURES FOR ADDITIONAL SUPPORT (I.E. MANUFACTURED C-CHANNEL, ET AL) TOPSIDE OF DUCTWORK TO MINIMIZE VISIBILITY.
         e. PAINT DUCTWORK AND SUPPORTS EXPOSED IN SPACE UNLESS OTHERWISE SPECIFIED.
      2) DUCT INSULATION: WRAP AND LINING (SA, RA)
         a. WRAP: 1-1/2", 3/4# PCF INSULATION, U=0.27 AT 50°F (ASTM C 177), WITH FSK VAPOR BARRIER AND 2" STAPLING FLANGE
         b. LINING: 1" FOR INTERIOR INSTALLATION OR 2" FOR EXTERIOR INSTALLATIONS, U=0.24 @ 75°F (ASTM C518), MAXIMUM VELOCITY 6000 FPM. INSTALL WITH 100% ADHESIVE COVERAGE, AND PINS PER SMACNA.
         c. INSULATE ALL JOINTS, FITTINGS AND FLANGES.
         d. ALL DUCT SHALL BE INSULATED OR LINED UNLESS SPECIFICALLY OTHERWISE IDENTIFIED.
         e. ALL PRODUCTS TO HAVE A 25 FLAME / 50 SMOKE DEVELOPED RATING WHEN TESTED IN ACCORDANCE WITH ASTM E 84, NFPA 255, UL723.
         f. DUCT INSULATION AND LINING SHALL BE INSTALLED IN COMPLIANCE WITH CHAPTER 6 OF THE UNIFORM MECHANICAL CODE AND TITLE 24.
      DUCT INSULATION: WRAP (GEF)
         a. WRAP: 3M FIRE BARRIER DUCT WRAP 615+
      3) DUCTWORK (SUPPLY AIR, RETURN AIR, MAKE-UP AIR)
         a. PROVIDE ROUND DUCTWORK IN SPIRAL SEAM CONSTRUCTION. PROVIDE ROUND ELBOWS SHALL BE 1-1/2 R RADIUS, GORED CONSTRUCTION.
         b. ALL GIRTH JOINTS FOR RECTANGULAR DUCTWORK PERMISSIBLE PER SMACNA HVAC DUCT CONSTRUCTION STANDARDS -METAL AND FLEXIBLE.
         c. PROVIDE SEALANT AT ALL JOINTS.
         d. PROVIDE DUCT CONSTRUCTION FOR TRANSITIONAL HARDWARE IN ENTIRETY OF INSTALLATION UNLESS OTHERWISE AND SPECIFICALLY IDENTIFIED. MEASURES FOR TRANSITIONAL HARDWARE SHALL INCLUDE 45 DEGREE WYE TAPS, SHOE TAPS, TURNING VANES, DUCT TRANSITIONS IN EXCESS OF 30 DEGREES FROM DIRECTION OF AIRFLOW, ET AL. MEASURES SHALL PRECLUDE STRAIGHT TAPS AND ELBOWS WITHOUT TURNING VANES.
         e. PROVIDE MVD'S AT ALL DUCT RUNOUTS TO DIFFUSERS AND REGISTERS (SUPPLY, RETURN, EXHAUST. FOR PRIMARY BALANCING OF ASSOCIATED SERVICES, UNLESS OTHERWISE AND SPECIFCALLY IDENTIFIED.
         f. PROVIDE OBD'S ON OUTSIDE AIR AND RETURN AIR DUCTWORK AS ARE PROVIDED IN INSTALLATION, FOR PRIMARY BALANCING OF UOUTSIDE AND RETURN AIR SERVICES, UNLESS OTHERWISE AND SPECIFCALLY IDENTIFIED.
         g. PROVIDE FLEX DUCT RUN-OUTS OF MAXIMUM 5'IN LENGTH FOR INSTALLATIONS DEVELOPED VIA RIGID ROUND DUCT MAINS AND SUB-MAINS AND RUN-OUTS. ROUND DUCT INSTALLATION MAY BE PROVIDED IN ENTIRETY AS SPECIFICALLY NOTED ON PLANS.
         h. ATTACH METALLIC FLEX DUCT TO SHEET METAL RUNOUTS AND TAPS VIA SHEET METAL SCREWS. ATTACH NON-METALLIC FLEX DUCT TO SHEET METAL RUNOUTS AND TAPS VIA STAINLESS STEEL BANDS / CLAMPS DESIGNED SPECIFICALLY FOR INSTALLATION. SECURE EXPOSED INSULATION. PROVIDE METALLIC TAPETO SEAL FLEX DUCT TO RUNOUT AND TAP.
         i. DUCT DIMENSIONS ARE NET INSIDE DIMENSIONS. INCREASE LINED DUCTS IN SIZE ACCORDINGLY.
         j. SUPPORT FLEX DUCT FLEX DUCT AT MAXIMUM 5'ON CENTER TO PRECLUDE SAG IN EXCESS OF 1/2"PER FOOT. PROVIDE SUPPORT VIA 26 GAGE STRAPS, MINIMUM 1"WIDE. MAINTAIN CROSS SECTIONAL AREA OF FLEX DUCT. PROVIDE BENDS IN FLEX DUCT EQUIVALENT TOO 1-1/2 R ELBOWS.
         k. INSTALL EXPOSED DUCT WORK AS SHOWN ON REFLECTED CEILING AND MECHANICAL PLANS. SUBMIT IN WRITING FOR APPROVAL FROM THE ARCHITECT PRIOR TO MAKING ANY MODIFICATIONS TO EXPOSED DUCT LAYOUTS.
         l. INSTALL DUCTWORK SO AS NOT TO DISTURB LIGHTING LAYOUT. COORDIANATE ROUTING PRIOR TO FABRICATION. VERIFY HEIGHTS OF LIGHTING FIXTURES TO ENSURE ADEQUATE CLEARANCE BETWEEN DUCTWORK (INCLUDING ALL FLANGES, SUPPORTING BRACKETS, ETC.) AND FIXTURES.
      4) DUCTWORK (GREASE EXHAUST)
         a. STAINLESS STEEL, 18 GAGE MINIMUM THICKNESS, WELDED CONSTRUCTION
      5) TERMINAL DEVICES
         a. INSULATE BACK PLATES OF ALL TERMINAL DEVICES (DIFFUSER, REGISTERS, GRILLES) ASSOCIATED WITH DISTRIBUTION OF CONDITIONED AIR.
         b. PAINT INTERNAL ELEMENTS OF TERMINAL DEVICE HARDWARE (DIFFUSER, REGISTERS, GRILLES) VISIBLE FROM OCCUPIED SPACE BLACK.
   G. CONTROLS
      1) LOCATE ALL THERMOSTATS AT THE SAME LEVEL WITHIN 6 INCHES OF LIGHT SWITCHES, OR IN LOCATIONS AS APPROVED BY THE OWNER'S REPRESENTATIVER PRIOR TO INSTALLATION.
      2) PROVIDE CONDUIT AND LOW-VOLTAGE WIRE FOR CONTROLS AS NECESSARY TO ACCOMPLISH INSTALLATION OF HVAC SYSTEMS IDENTIFIED HEREIN.
      3) PROVIDE CONTROL WIRING EXPOSED IN SPACE IN CONDUIT.
   H. ACCEPTANCE
      1) PROVIDE AABC OR NEBB CERTIFIED OR SMACNA AIR BALANCE REPORT.
      2) IDENTIFY EQUIPMENT AND HARDWARE VIA ENGRAVED ACRYLIC WHITE ON BLACK ADHESIVE LABELS, MANUFACTURED PIPE LABELS, CIRCUIT TAGS AND COMPLETED PANEL SCHEDULE LINE CARDS, ET AL.
      3) REPAIR OR REPLACE ANY DAMAGED CONSTRUCTION ADJACENT TO WORK PROVIDED UNDER THIS SCOPE OF WORK.
      4) AT THE COMPLETION OF THE INSTALLATION TEST EQUIPMENT AND HARDWARE FOR AND DEMONSTRATE TO OWNER'S REPRESENTATIVE'S PROPER OPERATION, AND MAKE ADJUSTMENTS AS REQUIRED. DELIVER VALIDATED CERTIFICATES, WARRANTIES AND GUARANTEES FOR NEW EQUIPMENT TO OWNER'S REPRESENTATIVE.
      5) MAINTAIN ONE SET OF REPRODUCIBLE DRAWINGS OF "AS-BUILT" CONDITIONS. SUBMIT AT THE COMPLETION OF THE PROJECT SAME TO THE OWNER'S REPRESENTATIVE.
      6) TERMS CITED HEREIN ARE REFLECTIVE OF OR IN ADDITION TO REQUIREMENTS FOR COMPLIANCE OF INSTALLATION TO APPLICABLE CODES. SUBMIT TO OWNER'S REPRESENTATIVE FOR APPROVAL OF DEVIATION FROM SAID TERMS.

BOA
Architecture
Interiors
Planning
1511 Cota Ave. Long Beach, CA 90813 Tel. 562-912-7900

KESSLER PARK SNACK BAR
SNACK BAR, RESTROOM REMODEL & NEW SHADE STRUCTURE
18401 JURUPA AVE, BLOOMINGTON, CA 92316

NO.	DATE	REV.	BY	CHK

Designer: KMF
CAD Draft: RT
Architect: LOK
Engineer: KMF
Client: BLOOMINGTON CITY
Date Issue: 02-21-2023
Job Number: 2939

PROJECT NOTES

M1.1

These drawings and accompanying, as instruments of service, are the exclusive property of the Architect and their use and publication shall be restricted to the original site for which they were prepared. Re-use, reproduction or publication by any method, in whole or part, is prohibited by written permission from the Architect. Title to these plans and specifications shall remain with the Architect without prejudice, and visual with them shall constitute prima facie evidence of acceptance of these restrictions.

G:\Project Files\2939 SB County SDD Kessler Park Snack Bar\01-Drawings\01-Revit\3-CD\Kessler Park Snack Bar_detached.rvt
12/15/2022 11:12:41 AM

NOTES:

1. (E) ROOF VENTILATION IN RESTROOMS TO REMAIN; PROTECT VENT IN PLACE
2. EXPOSED CEILING TO UNDERSIDE OF ROOF DECK
3. (E) HARD LID CEILING

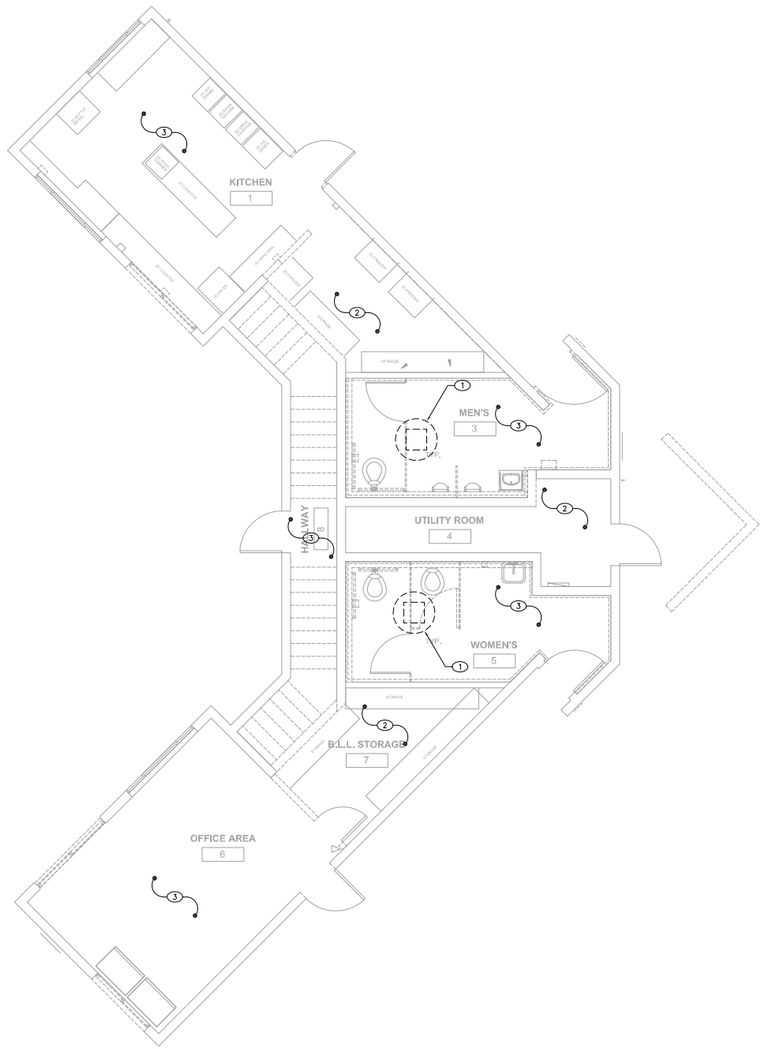

NORTH

DEMOLITION FLOOR PLAN

SCALE: 1/4"=1'-0"

NOTES:

1. (E) ROOF VENTILATION IN RESTROOMS TO REMAIN; PROTECT VENT IN PLACE

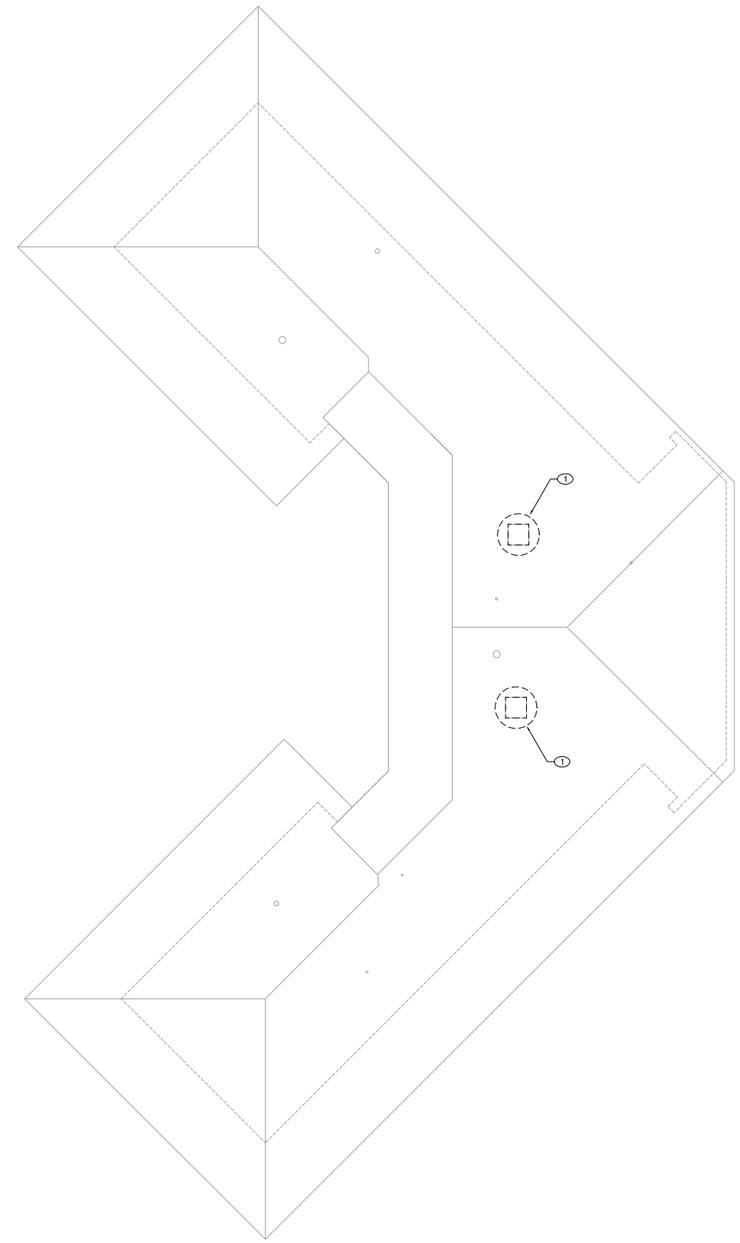

NORTH

DEMOLITION ROOF PLAN

SCALE: 1/4"=1'-0"

BOA Architecture Interiors Planning
1511 Cota Ave. Long Beach, CA 90813 Tel. 562-912-7900

KESSLER PARK SNACK BAR

SNACK BAR, RESTROOM REMODEL & NEW SHADE STRUCTURE

18401 JURUPA AVE, BLOOMINGTON, CA 92316

NO.	DATE	REV.	BY	CHK

Designer: MJF
CAD Drafter: JT
Architect: DK
Engineer: MJF
Client: SBCOUNTY CDA
Date Issued: 04-13-2023
Job Number: 2939

DEMOLITION FLOOR, ROOF PLAN

M2.1

These drawings and specifications are the exclusive property of the architect. They were prepared for the use and benefit of the client named herein. They are not to be used by any other person or entity, or for any other purpose, without the written consent of the architect.

G:\Project Files\2939 SB County SDD Kessler Park Snack Bar\CADworks\Kessler Park Snack Bar_detached.rvt
12/15/2022 11:12:41 AM

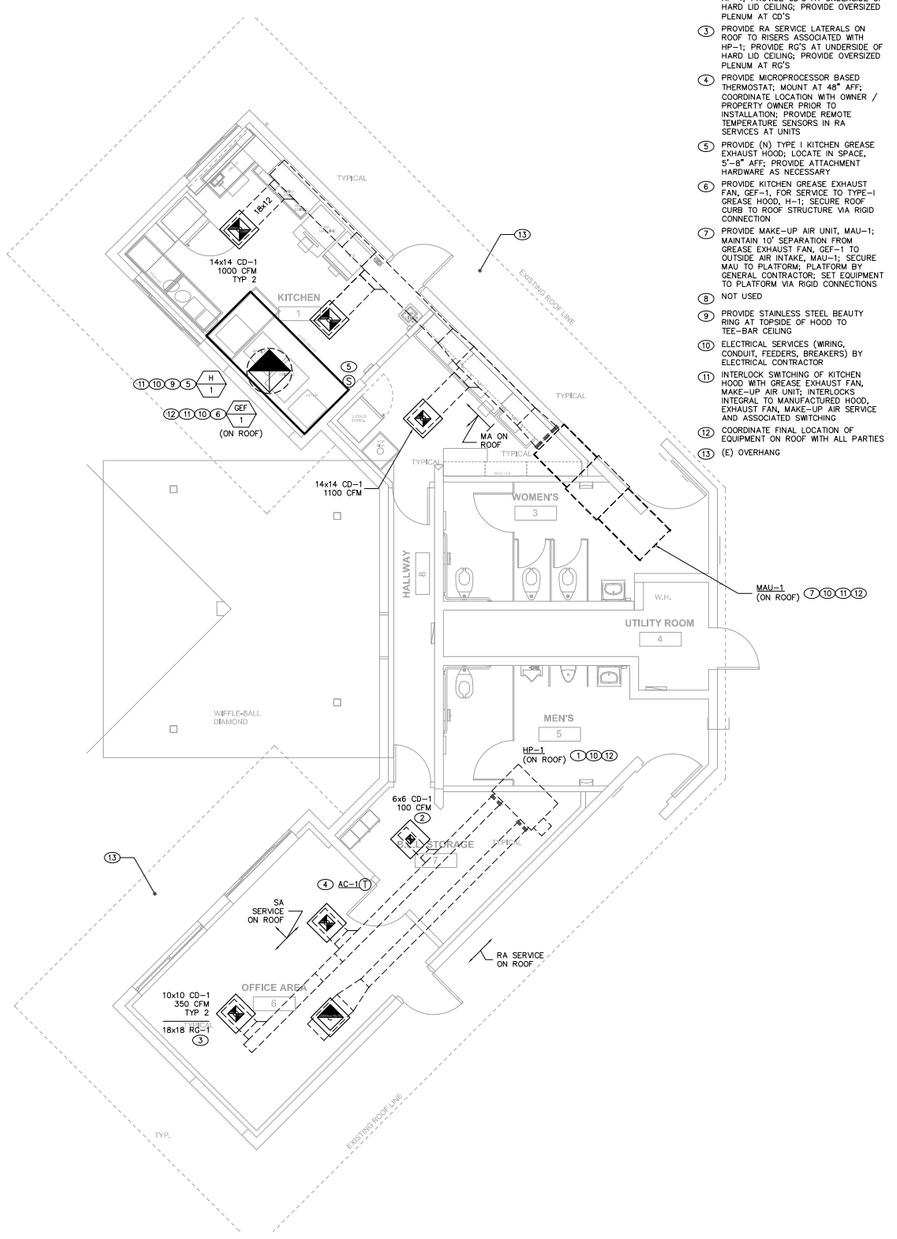

NOTES:

1. PROVIDE NEW HEAT PUMP HP-1 ON ROOF; SECURE HP TO PLATFORM; PLATFORM BY GENERAL CONTRACTOR; SET EQUIPMENT TO PLATFORM WITH RIGID CONNECTIONS; PROVIDE FLEX DUCT CONNECTIONS
2. PROVIDE SA SERVICE LATERALS ON ROOF TO RISERS ASSOCIATED WITH HP-1; PROVIDE CD'S AT UNDERSIDE OF HARD LID CEILING; PROVIDE OVERSIZED PLENUM AT CD'S
3. PROVIDE RA SERVICE LATERALS ON ROOF TO RISERS ASSOCIATED WITH HP-1; PROVIDE RG'S AT UNDERSIDE OF HARD LID CEILING; PROVIDE OVERSIZED PLENUM AT RG'S
4. PROVIDE MICROPROCESSOR BASED THERMOSTAT; MOUNT AT 48" AFF; COORDINATE LOCATION WITH OWNER / PROPERTY OWNER PRIOR TO INSTALLATION; PROVIDE REMOTE TEMPERATURE SENSORS IN RA SERVICES AT UNITS
5. PROVIDE (N) TYPE I KITCHEN GREASE EXHAUST HOOD; LOCATE IN SPACE, 5'-8" AFF; PROVIDE ATTACHMENT HARDWARE AS NECESSARY
6. PROVIDE KITCHEN GREASE EXHAUST FAN, GEF-1, FOR SERVICE TO TYPE-I GREASE HOOD, H-1; SECURE ROOF CURB TO ROOF STRUCTURE VIA RIGID CONNECTION
7. PROVIDE MAKE-UP AIR UNIT, MAU-1; MAINTAIN 10' SEPARATION FROM GREASE EXHAUST FAN, GEF-1 TO OUTSIDE AIR INTAKE, MAU-1; SECURE MAU TO PLATFORM; PLATFORM BY GENERAL CONTRACTOR; SET EQUIPMENT TO PLATFORM VIA RIGID CONNECTIONS
8. NOT USED
9. PROVIDE STAINLESS STEEL BEAUTY RING AT TOPSIDE OF HOOD TO TEE-BAR CEILING
10. ELECTRICAL SERVICES (WIRING, CONDUIT, FEEDERS, BREAKERS) BY ELECTRICAL CONTRACTOR
11. INTERLOCK SWITCHING OF KITCHEN HOOD WITH GREASE EXHAUST FAN, MAKE-UP AIR UNIT; INTERLOCKS INTEGRAL TO MANUFACTURED HOOD, EXHAUST FAN, MAKE-UP AIR SERVICE AND ASSOCIATED SWITCHING
12. COORDINATE FINAL LOCATION OF EQUIPMENT ON ROOF WITH ALL PARTIES
13. (E) OVERHANG

NORTH

R E N O V A T I O N F L O O R P L A N

SCALE: 1/4"=1'-0"

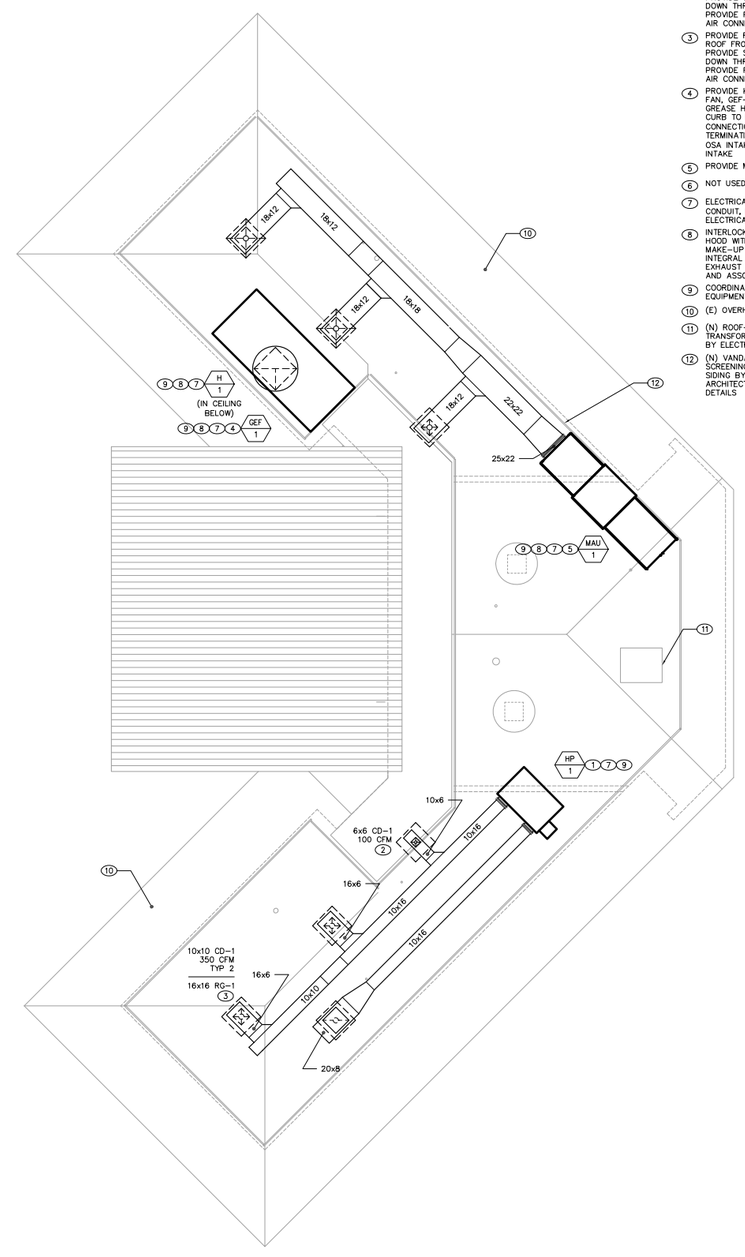

NOTES:

1. PROVIDE NEW HEAT PUMP HP-1 ON ROOF; SECURE HP TO PLATFORM; PLATFORM BY GENERAL CONTRACTOR; SET EQUIPMENT TO PLATFORM WITH RIGID CONNECTIONS; PROVIDE FLEX DUCT CONNECTIONS
2. PROVIDE SA DUCTWORK EXPOSED ON ROOF FROM HP-1 TO SERVICE RISERS, PROVIDE SERVICE RISERS STUBBED DOWN THROUGH ROOF, CAPPED; PROVIDE FLEX CONNECTION AT SUPPLY AIR CONNECTION TO UNIT
3. PROVIDE RA DUCTWORK EXPOSED ON ROOF FROM HP-1 TO SERVICE RISERS, PROVIDE SERVICE RISERS STUBBED DOWN THROUGH ROOF, CAPPED; PROVIDE FLEX CONNECTION AT SUPPLY AIR CONNECTION TO UNIT
4. PROVIDE KITCHEN GREASE EXHAUST FAN, GEF-1, FOR SERVICE TO TYPE-I GREASE HOOD, H-1; SECURE TO CURB, CURB TO ROOF STRUCTURE VIA RIGID CONNECTIONS; PROVIDE MIN. 3' TERMINATION OF EA SERVICE ABOVE OSA INTAKE, MIN. 10' AWAY FROM OSA INTAKE
5. PROVIDE MAKE-UP AIR UNIT, MAU-1
6. NOT USED
7. ELECTRICAL SERVICES (WIRING, CONDUIT, FEEDERS, BREAKERS) BY ELECTRICAL CONTRACTOR
8. INTERLOCK SWITCHING OF KITCHEN HOOD WITH GREASE EXHAUST FAN, MAKE-UP AIR UNIT; INTERLOCKS INTEGRAL TO MANUFACTURED HOOD, EXHAUST FAN, MAKE-UP AIR SERVICE AND ASSOCIATED SWITCHING
9. COORDINATE FINAL LOCATION OF EQUIPMENT ON ROOF WITH ALL PARTIES
10. (E) OVERHANG
11. (N) ROOF-MOUNTED ELECTRICAL TRANSFORMER; EQUIPMENT, CIRCUITING BY ELECTRICAL CONTRACTOR
12. (N) VANDAL-RESISTANT ROOF SCREENING WITH HORIZONTAL METAL SIDING BY GENERAL CONTRACTOR; SEE ARCHITECTURAL PLANS FOR SCREENING DETAILS

NORTH

R E N O V A T I O N R O O F P L A N

SCALE: 1/4"=1'-0"

BOA Architecture Interiors Planning
1511 Cota Ave. Long Beach, CA 90813 Tel. 562-912-7900

KESSLER PARK SNACK BAR

SNACK BAR, RESTROOM REMODEL & NEW SHADE STRUCTURE

18401 JURUPA AVE, BLOOMINGTON, CA 92316

NO.	DATE	REV.	BY	CHK

Designer: KWF
CAD Draft: BT
Architect: LOI
Engineer: KWF
Client: BLOOMINGTON CITY
Date Issue: 02-23-2023
Job Number: 2939

• RENOVATION FLOOR, ROOF PLAN •

M2.2

These drawings and specifications are the property of the Architect and may not be used for any purpose other than the project for which they were prepared, nor shall they be reproduced in whole or in part by any method or means without the written permission of the Architect.

G:\Project Files\2939 SB County SDC Kessler Park Snack Bar\Drawings\Working\Arch\X-Ref\Kessler Park Snack Bar_arch.dwg
12/15/2022 11:12:41 AM

NOTES:

- (A) MAKE-UP AIR UNIT CONFIGURED FOR SIDE DISCHARGE; 649#
- (B) NOT USED
- (C) NOT USED
- (D) NOT USED
- (E) PACKAGE UNIT BASE RAIL
- (F) 2x2x1/8" ANGLE CLIP AT 24" O.C. MINIMUM, (4) SIDES; SECURE CLIP TO UNIT BASE RAIL VIA 1/4"ø SDS SCREW WITH EMBED 1 1/2"; SHEET METAL SCREW; SECURE TO PLATFORM VIA 3/8"x3" LAG SCREW; SET CLIPS IN MASTIC
- (G) 26 GAGE CURB CAP
- (H) CANT STRIP
- (J) 2x6 PLATFORM FRAMING ON PERIMETER, INTERIM AT 16" ON CENTER
- (K) 4x6 SLEEPER ELEMENTS FOR PERIMETER SUPPORT OF MAKE-UP AIR UNIT
- (L) SET FRAMING / SLEEPER HARDWARE VIA SIMPSON A35 HARDWARE AT 24" OC
- (M) ROOFING TO INTEGRATE (N) PLATFORM / INSTALLATION TO (E) ROOF DECK
- (N) (E) ROOFING
- (P) (E) ROOF DECK
- (Q) (E) ROOF RAFTERS; 2x8 AT 16" OC
- (R) GYP. BOARD
- (S) 4x8 FLAT BLOCK AT 24" OC AT PLATFORM PERIMETER & OPENINGS SIMPSON A35 HARDWARE
- (T) CW SERVICE BY PLUMBING CONTRACTOR
- (U) D SERVICE BY PLUMBING CONTRACTOR
- (W) RECONNECT (E) ELECTRICAL SERVICE
- (X) RECONNECT (E) CONTROL CIRCUITING
- (Y) INTEGRATE SMOKE DETECTOR HARDWARE
- (Z) NOT USED
- (AA) SUPPLY AIR SERVICES EXPOSED ON ROOF
- (BB) 3/4" PLYWOOD SHEATHING
- (CC) 2x BLOCKING FOR SUPPORT OF MAKE-UP AIR UNIT
- (DD) 2x FLAT SLEEPER AT PLATFORM PERIMETER WITH 1/4"ø SDS SCREWS AT 24" O.C.; MINIMUM 1-1/2" EMBED AT (E) ROOF FRAMING
- (EE) SIMPSON A35 AT 24" O.C. AT PLATFORM TO SLEEPER
- (FF) BLIND NAILING

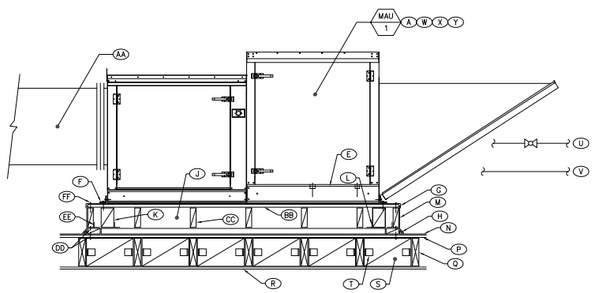

MAU MOUNTING — NO SCALE — 3

NOTES:

- (A) ROOFTOP PACKAGE HEAT PUMP UNIT HP-1; SECURE TO PLATFORM VIA INTERIM HARDWARE (AS NECESSARY)
- (B) CAL-DYN SEISMIC SPRING MOUNT VIBRATION ISOLATION; SECURE TO AC VIA INTERIM SUPPORT HARDWARE VIA ADJUSTMENT BOLT/LOCKNUT; SECURE HOUSING TO INTERIM SLEEPER VIA MANUFACTURER'S RECOMMENDATIONS
- (C) NOT USED
- (D) NOT USED
- (E) PACKAGE UNIT BASE RAIL
- (F) NOT USED
- (G) 26 GAGE CURB CAP
- (H) CANT STRIP
- (J) 2x6 PLATFORM FRAMING ON PERIMETER, INTERIM AT 16" ON CENTER
- (K) 4x6 SLEEPER ELEMENTS FOR PERIMETER SUPPORT OF PACKAGE UNIT
- (L) SET FRAMING / SLEEPER HARDWARE VIA SIMPSON A35 HARDWARE AT 24" OC
- (M) ROOFING TO INTEGRATE (N) PLATFORM / INSTALLATION TO (E) ROOF DECK
- (N) (E) ROOFING
- (P) (E) ROOF DECK
- (Q) (E) ROOF RAFTERS; 2x8 AT 16" OC
- (R) GYP. BOARD
- (S) 4x8 FLAT BLOCK AT 24" OC AT PLATFORM PERIMETER & OPENINGS SIMPSON A35 HARDWARE
- (T) CD DRAIN WITH TRAP BY PLUMBING CONTRACTOR
- (V) NOT USED
- (W) LOW VOLTAGE CONDUIT BY ELECTRICAL CONTRACTOR; LOW VOLTAGE WIRING BY MECHANICAL CONTRACTOR
- (X) LINE VOLTAGE CONDUIT WIRE BY ELECTRICAL CONTRACTOR
- (Y) INTEGRATE SMOKE DETECTOR HARDWARE
- (Z) NOT USED
- (AA) SA, RA SERVICES EXPOSED ON ROOF
- (BB) 3/4" PLYWOOD SHEATHING
- (CC) 2x BLOCKING FOR SUPPORT OF MAKE-UP AIR UNIT
- (DD) 2x FLAT SLEEPER AT PLATFORM PERIMETER WITH 1/4"ø SDS SCREWS AT 24" O.C.; MINIMUM 1-1/2" EMBED AT (E) ROOF FRAMING
- (EE) SIMPSON A35 AT 24" O.C. AT PLATFORM TO SLEEPER
- (FF) BLIND NAILING

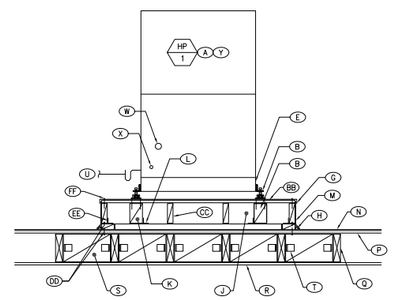

HP MOUNTING — NO SCALE — 2

- (A) (N) TYPE 1 GREASE HOOD H-1; PROVIDE FRONT EDGE HEIGHT OF HOOD AT 84" AFF; HOOD CONSTRUCTION IS 20 GAGE STAINLESS STEEL; FURNISH WITH 3" STAND-OFF BRACKET; (N) CONSTRUCTION TO PROVIDE SEAMS, JOINTS, AND PENETRATIONS OF THE HOOD ENCLOSURE THAT DIRECT AND CAPTURE GREASE-LADEN VAPORS AND EXHAUST GASES VIA LIQUID-TIGHT CONTINUOUS EXTERNAL WELD TO THE HOOD'S LOWER OUTERMOST PERIMETER
- (B) PROVIDE GREASE EXHAUST SERVICE RISER FROM TOPSIDE OF HOOD UP THROUGH CEILING TO GEF-1 ON ROOF; GREASE EXHAUST DUCT SHALL BE STAINLESS STEEL, 18 GAGE MINIMUM THICKNESS, WELDED CONSTRUCTION
- (C) ELEVATED OVERSIZED VENTED EF CURB; OVERSIZED FOR FIT OF WRAPPED EA DUCT WITH VOLUME OF CURB
- (D) PROVIDE GREASE EXHAUST FAN, GEF-1
- (E) PROVIDE 3M FIRE BARRIER DUCT WRAP 615+; INSTALL PER MANUFACTURERS REQUIREMENTS, PER U.L. LISTING TO HEIGHT OF 18" ABOVE COMBUSTIBLES FOR 0" CLEARANCES TO COMBUSTIBLE
- (F) (E) SEMICOMBUSTIBLE BACKWALL TO HOOD FOR PROXIMITY TO KITCHEN EQUIPMENT; (E) 8" CMU EXTERIOR WALL, (N) 2X4 WOOD STUD FURRED WALL CONSTRUCTION AT 16" O.C. WITH R-13 BATT INSULATION, GYP BOARD FOR SEMI-COMBUSTIBLE CONSTRUCTION
- (G) 304 STAINLESS STEEL BEHIND COOKING EQUIPMENT TO FULL HEIGHT IN SPACE
- (H) ADAPTER PLATE INTERIM GEF TO OVERSIZED CURB
- (J) PROVIDE GREASE EXHAUST FAN TERMINATION MINIMUM 40" ABOVE ROOF, 3'-0" ABOVE OUTSIDE AIR INTAKES WITHIN 10'
- (K) HARD LID CEILING; MODIFY AS NECESSARY
- (M) EXISTING ROOF FRAMING; COMBUSTIBLE CONSTRUCTION (NON-RATED)
- (N) (N) KITCHEN EQUIPMENT (FRYER, GRIDDLE, BROILER, COUNTERTOP ELECTRIC-HEATED PIZZA OVEN) UNDERNEATH KITCHEN HOOD, PROVIDED BY OWNER
- (O) PROVIDE MINIMUM 6" OVERHANG OF HOOD OVER EQUIPMENT (COOKING SURFACE)
- (P) CANT STRIP
- (Q) ROOFING; REPAIR AS NECESSARY
- (R) MAINTAIN CLEARANCES FROM HOOD: 18" TO COMBUSTIBLES; 3" TO SEMI-COMBUSTIBLES; 0" TO NON-COMBUSTIBLES
- (S) PROVIDE ADDITIONAL BLOCKING AS NECESSARY
- (T) CANOPY LIGHT FIXTURE PER MANUFACTURER; SEE SHEET M5.0 FOR FURTHER INFORMATION
- (U) 20" CAPTRATE SOLO FILTER WITH HOOK BY MANUFACTURER
- (V) GREASE DRAIN WITH REMOVABLE CAP
- (W) MAKE-UP AIR UNIT, MAU-1
- (X) (N) EQUIPMENT PLATFORM FOR MAKE-UP AIR UNIT; SEE DETAIL 3, SHEET M3.0 FOR MOUNTING DETAIL
- (Y) MAINTAIN 0" CLEARANCES (FOR DUCT WRAP)
- (Z) (E) 2x8 ROOF RAFTERS AT 16" OC

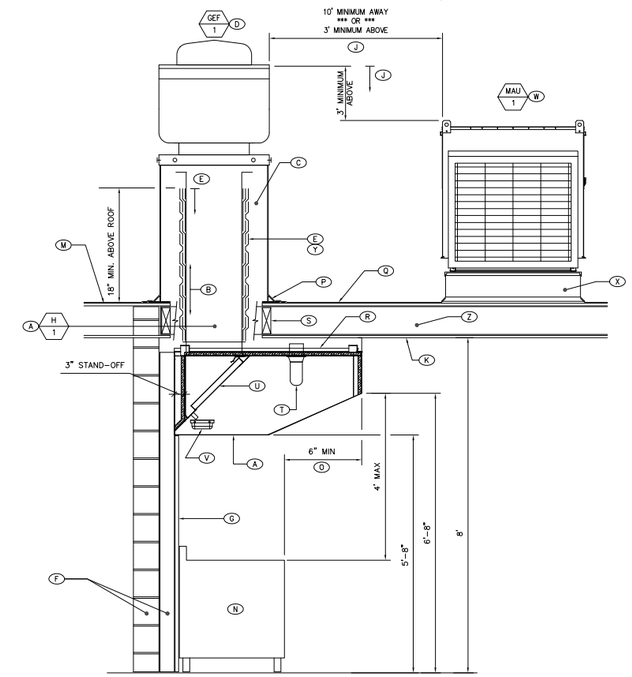

HOOD SECTION / GEF MOUNTING — NO SCALE — 1

NOTES:

- (A) PROVIDE P&TR, PR, D(X3) SERVICES
- (B) PROVIDE 4x4 PRESSURE TREATED SLEEPER, SET SLEEPER IN MASTIC ON ROOF PAD
- (C) PROVIDE 22 GA GALVANIZED STEEL CAP ON SLEEPER
- (D) PROVIDE MANUFACTURED C-CHANNEL
- (E) PROVIDE PIPE STRAP
- (F) SET SLEEPER ON ROOFING PAD, SET PAD IN MASTIC ON ROOFING
- (G) (E) ROOFING
- (H) (E) ROOF DECK
- (J) PROVIDE ADDITIONAL HARDWARE AS NECCESSARY FOR SLOPE, HEIGHT REQUIREMENTS FOR DRAIN SERVICES

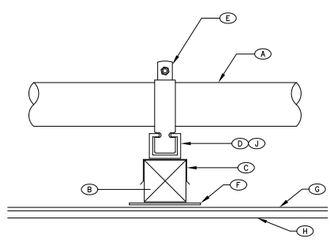

PIPE SUPPORT — NO SCALE — 6

NOTES:

- (A) PROVIDE DUCT UTR, RISER; PROVIDE TRANSITIONAL AS TAP AT LATERAL
- (B) PROVIDE SELF-FLASHING SHEET METAL COLLAR
- (C) PROVIDE DUCT TABBED OVER; WEATHERPROOF VIA SEALANT AT MATED SURFACES
- (D) PROVIDE MANUFACTURED THYCURB
- (E) PROVIDE BLOCKING AS NECESSARY
- (F) PROVIDE DUCT LINING FOR SA, RA SERVICE UTR, ON ROOF; PROVIDE DUCT LATERAL ON ROOF
- (G) CANT STRIP
- (H) (E) ROOFING
- (J) (E) ROOF DECK
- (K) (E) ROOF RAFTERS; 2x8 AT 16" OC
- (L) (E) OVERSIZED SA / RA CAN
- (M) PROVIDE CD / RG
- (N) GYP. BOARD

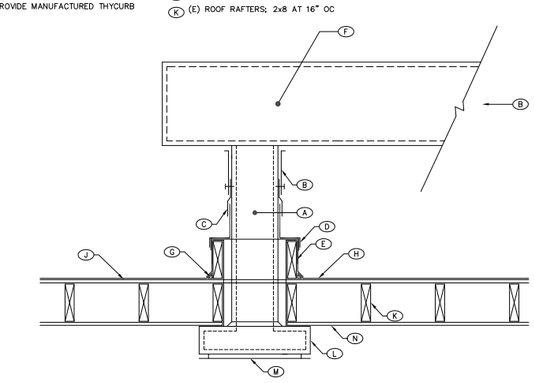

DUCT THROUGH ROOF — NO SCALE — 5

NOTES:

- (A) 4x4 TREATED REDWOOD SLEEPER, MINIMUM WIDTH OF DUCT PLUS 12", SET IN MASTIC
- (B) SECURE SLEEPER 1/2" DIAMETER LAG BOLT INTO INTERIM BLOCKING, COUNTERSUNK WITH MINIMUM 3" EMBEDMENT, (2) PER SLEEPER
- (C) UNISTRUT P1000 MOUNTING FEET / LATERAL
- (D) SECURE UNISTRUT LATERAL TO SLEEPER VIA 1/4"X3" LAG SCREW. (3) PER LATERAL
- (E) VERTICAL, LATERAL UNISTRUT P1000 MOUNTING HARDWARE FULL HEIGHT, FULL WIDTH OF DUCT
- (F) 1/2" MACHINE BOLTS WITH GUSSETTED ANGLE CLIP HARDWARE
- (G) DUCT PER PLANS
- (H) 10# SHEET METAL SCREWS AT MINIMUM 12" ON CENTER; MINIMUM 2 PER SIDE
- (J) 20 GAGE CURB CAP/SHEET METAL FLASHING
- (K) SET FEET IN MASTIC
- (L) CANT STRIP
- (M) RUN ROOFING UP UNDERNEATH CAP / FLASHING
- (N) (E) ROOFING
- (P) (E) ROOF DECK
- (Q) (E) ROOF RAFTERS; 2x8 AT 16" OC
- (R) GYP. BOARD
- (S) 4x8 FLAT BLOCK AT DUCT ATTACHMENT PERIMETER
- (T) SIMPSON A35 HARDWARE
- (U) MAXIMUM SPACING 8' ON CENTER FOR DUCT SUPPORT

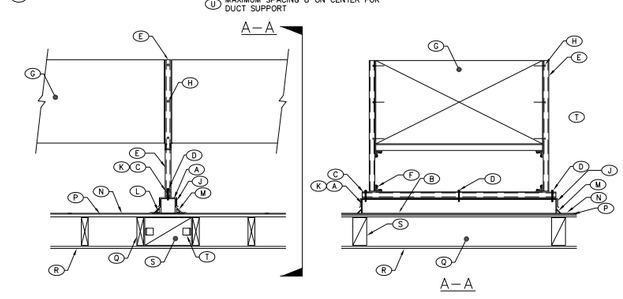

DUCT SUPPORT — NO SCALE — 4

BOA Architecture Interiors Planning
1511 Cota Ave. Long Beach, CA 90813 Tel. 562-912-7900

KESSLER PARK SNACK BAR

SNACK BAR, RESTROOM REMODEL & NEW SHADE STRUCTURE

18401 JURUPA AVE, BLOOMINGTON, CA 92316

NO.	DATE	REV.	BY	CHK

Designer: CAF
CAD Draft: ST
Architect: OK
Engineer: CAF
Client: A.JOURNEYMAN
Date Issue: 02-13-2023
Job Number: 2939

DETAILS

M3.0

These drawings and accompanying specifications are the property of BOA Architecture Interiors Planning and are protected by the copyright laws of the United States. The reproduction, publication or use of these drawings or any part thereof without written consent of BOA Architecture Interiors Planning is prohibited.

G:\Project Data\2939 SBI County SDO Kessler Park Snack Bar\Autodesk\Revit\Revit Models\Kessler Park Snack Bar_detached.rvt
12/15/2022 11:12:41 AM

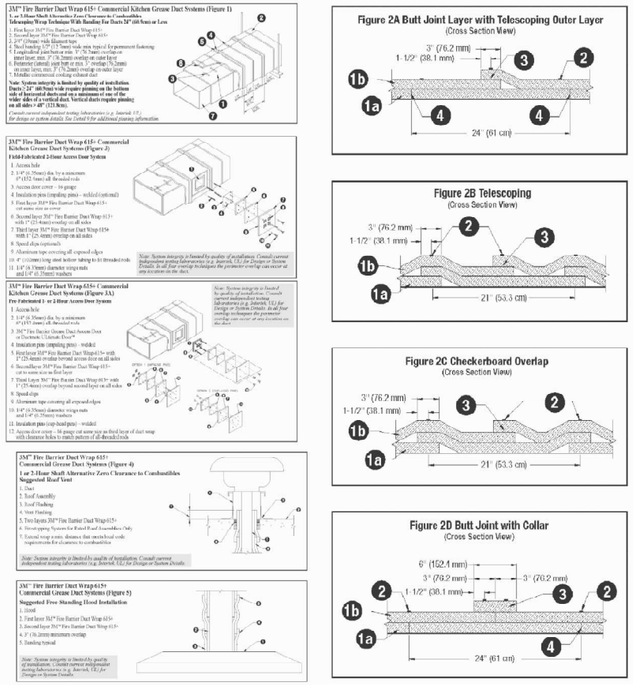

DUCT WRAP

NO SCALE 3

NOTES:

- (A) PROVIDE ROOFTOP EXHAUST FAN
- (B) PROVIDE LINE VOLTAGE THERMOSTAT
- (C) PROVIDE 7-DAY PROGRAMMABLE TIMECLOCK
- (D) SEE ELECTRICAL DRAWINGS FOR LINE VOLTAGE CONDUIT AND WIRE
- (E) SEE ELECTRICAL DRAWINGS FOR CIRCUIT BREAKER
- (F) SEE ELECTRICAL DRAWINGS FOR DISCONNECT

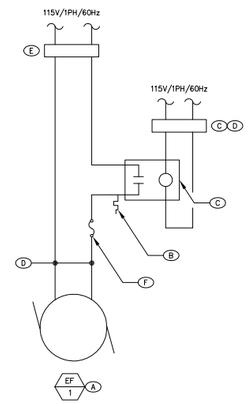

EF WIRING DIAGRAM

NO SCALE 2

NOTES:

- (A) PROVIDE ROOF TOP PACKAGE HEAT PUMP
- (B) PROVIDE 7-DAY PROGRAMMABLE THERMOSTAT; VERIFY APPLICATION FOR PACKAGE HEAT PUMP
- (C) SEE ELECTRICAL DRAWINGS FOR LOW-VOLTAGE CONDUIT; PROVIDE LOW VOLTAGE WIRING; VERIFY REQUIREMENTS FOR NUMBER OF WIRES
- (D) SEE ELECTRICAL DRAWINGS FOR LINE VOLTAGE CONDUIT AND WIRE
- (E) SEE ELECTRICAL DRAWINGS FOR CIRCUIT BREAKER
- (F) SEE ELECTRICAL DRAWINGS FOR DISCONNECT

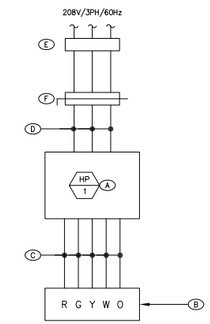

HP WIRING DIAGRAM

NO SCALE 1

RESTROOMS FREE AREA CALCULATIONS

REQUIRED FREE AREA:

OPENABLE / FIXED AREA OF OPENINGS TO OUTDOORS SHALL BE NO LESS THAN 4% OF FLOOR AREA BEING VENTILATED (CBC 1202.5.1)

MEN'S RESTROOM FLOOR AREA = 145 SF

145 SF x 4% = 5.8 CFM REQUIRED

WOMEN'S RESTROOM FLOOR AREA = 141 SF

141 SF x 4% = 5.6 SF REQUIRED

MAKE-UP AIR OPENING (GATED ROD IRON DOOR, NO MESH):

DOOR SIZE: 3'-6" WIDTH x 7'-0" HEIGHT

3.5 FT x 7.0 FT = 25 SF

(1) 1" IRON BAR FOR EVERY 6" OC: (6) ALONG WIDTH, (13) ALONG HEIGHT

IRON BAR CONTAINS 48 INTERSECTING POINTS (1" x 1" AREA)

6 (1" x 42") + 13 (1" x 84") - 48 (1" x 1") = 1,296 IN^2 = 9 SF

25 SF - 9 SF = 16 SF

16 SF PROVIDED FOR EACH RESTROOM

16 SF PROVIDED > 5.8 SF REQUIRED

THEREFORE, MAKE-UP AIR OPENINGS PROVIDE SUFFICIENT FREE AREA FOR EACH RESTROOM

RESTROOMS FREE AIR CALCULATION

NO SCALE 5

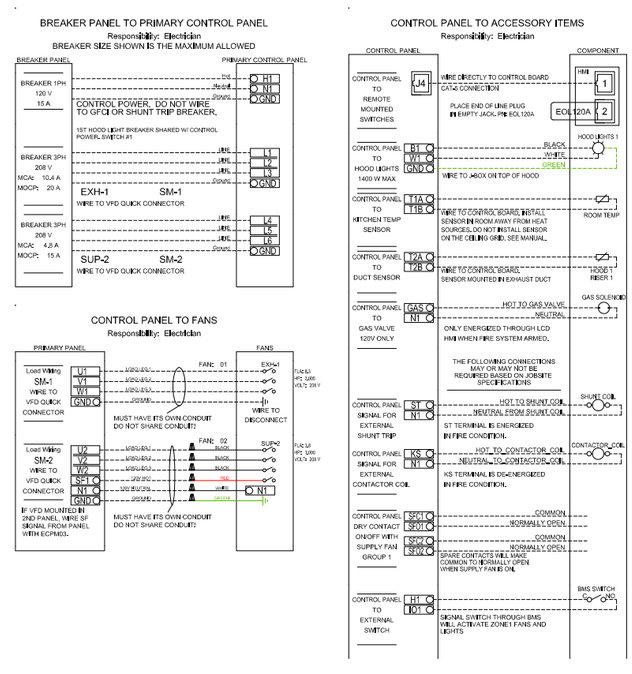

MAU WIRING DIAGRAM

NO SCALE 4

BOA Architecture Interiors Planning
1511 Cota Ave. Long Beach, CA 90813 Tel. 562-912-7900

KESSLER PARK SNACK BAR

SNACK BAR, RESTROOM REMODEL & NEW SHADE STRUCTURE

18401 JURUPA AVE, BLOOMINGTON, CA 92316

DATE	DESCRIPTION

Designer: AMF
CAD Drafter: RT
Architect: JK
Engineer: AMF
Client: B.JOURNIGAN CPP
Date Issue: 02-14-2023
Job Number: 2939

• DETAILS

M3.1

These drawings and specifications are the property of BOA Architecture and shall not be reproduced in whole or part by any method or publication without the written consent of BOA Architecture.

C:\Users\ajm\2939 SB County SDO Kessler Park Snack Bar\2-Drawings\Arch\Arch\2939-Kessler Park Snack Bar_ajm.rvt
12/15/2022 11:12:41 AM

STATE OF CALIFORNIA
Envelope Component Approach
NRCC-ENV-E (Created 11/19) CALIFORNIA ENERGY COMMISSION

CERTIFICATE OF COMPLIANCE			NRCC-ENV-E
This document is used to demonstrate compliance with mandatory requirements in §110.8(g) and §120.7(b) for newly constructed buildings, and §141.0(b)1 for alterations, related to roof, wall and floor assemblies. It is also used to demonstrate compliance with prescriptive requirements in §140.3 for newly constructed buildings, and §141.0 for additions and alterations, related to roof, wall, floor, door, fenestration and daylighting requirements.			
Project Name:	Kessler Park Snack Bar - Snack Bar and Restroom Remodel, New Shade Construction	Report Page:	Page 1 of 6
Project Address:	18401 Jurupa Avenue, Bloomington CA 92316	Date Prepared	2022-05-22

A. GENERAL INFORMATION

01	Project Location (city)	Bloomington	05	# of Stories (Habitable Above Grade)	1
02	Zipcode	92316	06	Total Conditioned Floor Area (ft²)	854
03	Climate Zone	10	07	Total Unconditioned Floor Area (ft²)	521
04	Occupancy Types Within Project (select all that apply): If one occupancy constitutes ≥ 80% of the conditioned floor area, the entire building envelope may be designed to comply with the provisions of that occupancy per §100.0(f).		08	☐ Project includes unconditioned enclosed space(s) >5,000ft² under a roof with a ceiling height of at least 15ft.[1]	

☑ All Nonresidential, including Relocatable Public School Building certified for use in one climate zone Occupancy: A / B / E / F / H / M / S / U — ☐ Relocatable Public School Building for use in all climate zones Occupancy: E — ☐ High-Rise Residential Occupancy: R-2 / R-3 — ☐ Hotel/Motel Guest Rooms Occupancy: R-1

[1] FOOTNOTE: Enclosed spaces > 5,000 ft² directly under roof with ceiling height > 15ft in climate zones 2 through 15 are required to meet the minimum daylighting requirements defined in §140.3(c). Compliance with §140.3(c) is documented in Table L. This is the only prescriptive requirement which applies to unconditioned spaces.

B. PROJECT SCOPE

Table Instructions: include any building envelopes that are within the scope of the permit application and are demonstrating compliance using the prescriptive paths outlined in §140.3, and §141.0(a)1 and §141.0(b)1 and 2 for additions and alterations.

My project consists of (check all that apply) 01	Component Types 02		
☐ New Construction or Newly Conditioned Space / ☐ One or more enclosed spaces > 5,000 ft² directly under roof with ceiling height > 15ft	☐ Roof	☐ Walls / ☐ Floors	☐ Exterior Doors / ☐ Fenestration/Glazed Door[1]
☑ Addition of conditioned space / ☐ One or more enclosed spaces > 5,000 ft² directly under roof with ceiling height > 15ft	☑ Roof	☑ Walls / ☐ Floors	☐ Exterior Doors / ☐ Fenestration/Glazed Door[1]
☐ Alteration of conditioned space / ☐ One or more enclosed spaces > 5,000 ft² directly under roof with ceiling height > 15ft and lighting system installed for the first time	☐ Roof Assembly / ☐ Roofing Material	☐ Walls / ☐ Floors	Exterior Doors NA for Alts. / ☐ Fenestration

[1] FOOTNOTE: Doors that are more than one-half glass in area are considered Glazed Doors and should be documented on Table K with fenestration.

CA Building Energy Efficiency Standards - 2019 Nonresidential Compliance: http://www.energy.ca.gov/title24/2019standards November 2019

STATE OF CALIFORNIA
Envelope Component Approach
NRCC-ENV-E (Created 11/19) CALIFORNIA ENERGY COMMISSION

CERTIFICATE OF COMPLIANCE			NRCC-ENV-E
Project Name:	Kessler Park Snack Bar - Snack Bar and Restroom Remodel, New Shade Construction	Report Page:	Page 2 of 6
Project Address:	18401 Jurupa Avenue, Bloomington CA 92316	Date Prepared	2022-05-22

C. COMPLIANCE RESULTS

Table Instructions: If any cell on this table says "DOES NOT COMPLY" or "COMPLIES with Exceptional Conditions" refer to Table D. for guidance.

Roof Assembly	Roofing Materials	Walls	Floors	Doors	Fenestration	Daylighting Spaces > 5,000 ft²	Compliance Results
01	02	03	04	05	06	07	08
(See Table F)	(See Table G)	(See Table H)	(See Table I)	(See Table J)	(See Table K)	(See Table L)	
Yes	No	No					DOES NOT COMPLY

D. EXCEPTIONAL CONDITIONS

This table is auto-filled with uneditable comments because of selections made or data entered in tables throughout the form.

No exceptional conditions apply to this project.

E. ADDITIONAL REMARKS

This table includes remarks made by the permit applicant to the Authority Having Jurisdiction.

F. ROOF ASSEMBLY SCHEDULE

Table Instructions: Complete this table to demonstrate compliance with prescriptive roof assembly requirements in §140.3(a)1B for new construction or additions, or §141.0(b)2Biii for alterations.

01 Indicate roof types included in the project: ☑ Framed ☐ SIPs ☐ Span Deck & Concrete ☐ Metal Panels ☐ Metal Building

Framed Roof Assemblies

01 ☐ Include Framed Roof Assemblies in Area-Weighted Average U-factor Calculation[1]

02	03	04	05	06
Tag / Plan Detail ID	Name / Description	Status	Exception to Roof Insulation Requirements in §141.0(b)2Biii (Alts. Only)	Occupancy Type
R-1	Roof	Altered	None of these exceptions apply	Nonresidential/ Relocatable 1 CZ

Reset | Add Row | Remove Last

Table Continued

CA Building Energy Efficiency Standards - 2019 Nonresidential Compliance: http://www.energy.ca.gov/title24/2019standards November 2019

STATE OF CALIFORNIA
Envelope Component Approach
NRCC-ENV-E (Created 11/19) CALIFORNIA ENERGY COMMISSION

CERTIFICATE OF COMPLIANCE			NRCC-ENV-E
Project Name:	Kessler Park Snack Bar - Snack Bar and Restroom Remodel, New Shade Construction	Report Page:	Page 3 of 6
Project Address:	18401 Jurupa Avenue, Bloomington CA 92316	Date Prepared	2022-05-22

07	08	09	10	11	12	13	14	15	16
Tag / Plan Detail ID	How Design U-factor was determined	Roof Type & Frame Material	Frame Spacing & Depth	Cavity Insulation per Design	Continuous Insulation per Design	Thermal Performance Unit	Required Thermal Performance[2]	U-factor per Design	Net Area[3] (ft²)
R-1	JA4 Tables (default)	Rafter-Wood	16" OC & 2x8 framing	R-19 / R-	None / R-	U-factor	0.055	per JA4 0.051 / per Software/ Other	

[1] FOOTNOTE: If any individual assembly is non-compliant, assemblies may show compliance using an area-weighted calculation. Metal building roofs may not be combined with other roof types. The area-weighted compliance option is not available for alterations demonstrating compliance with R-values in Table 141.0-C
[2] If "R-value" is shown in cell 13 as the Thermal Performance Unit the R-value shown here is for continuous insulation per Table 141.0-C.
[3] Roof area minus any fenestration/skylight area.

G. RATED ROOFING MATERIAL (COOL ROOF)

Table Instructions: Complete this table to demonstrate compliance with prescriptive roof material requirements in §140.3(a)1A for new construction or additions, or §141.0(b)2B for alterations.

01	02	03	04	05	06	07
Tag / Plan Detail ID	Name / Description / Location	Status	Occupancy Type	Roof Slope	Roof Material	Compliance Method
R-1	Roof	Altered	Nonresidential/ Relocatable 1 CZ	≤ 2:12 (Low)	Wood	

08 Required Minimum Material Performance		09 Designed Material Performance		10 U-factor of Assembly
Reflectance	0.63	Reflectance[1]		
Emittance	0.75	Emittance		
SRI		SRI		

Reset | Add Row | Remove Last

FOOTNOTE: If Solar Reflectance (initial) is indicated in column 07, enter the Initial Reflectance here and the form will convert it to a "Calculated Aged Solar Reflectance" when determining compliance.

CA Building Energy Efficiency Standards - 2019 Nonresidential Compliance: http://www.energy.ca.gov/title24/2019standards November 2019

STATE OF CALIFORNIA
Envelope Component Approach
NRCC-ENV-E (Created 11/19) CALIFORNIA ENERGY COMMISSION

CERTIFICATE OF COMPLIANCE			NRCC-ENV-E
Project Name:	Kessler Park Snack Bar - Snack Bar and Restroom Remodel, New Shade Construction	Report Page:	Page 4 of 6
Project Address:	18401 Jurupa Avenue, Bloomington CA 92316	Date Prepared	2022-05-22

H. WALL ASSEMBLY SCHEDULE

Table Instructions: Complete this table to demonstrate compliance with prescriptive wall assembly requirements in §140.3(a)2 and §140.3(c)3 for new construction or additions, or mandatory wall assembly requirements in §141.0(b)1I3 for alterations.

01 Indicate wall types included in the project:[1] ☑ Framed ☐ Mass (new only) ☐ Concrete Sandwich Panel (new only) ☐ SIPs ☐ ICF (new only) ☐ Metal Panel ☐ Metal Building ☐ Spandrel/ Curtain Wall ☐ Straw Bale ☐ Log Home (new only)

FOOTNOTE: Wall types indicated above as "(new only)" do not have Title 24, Part 6 requirements for alterations. New construction and additions do have requirements and should be clicked above and compliance demonstrated within this table.

Framed Walls

01 ☐ Calculate Area-Weighted Average U-factor for Metal Framed Walls[1]
02 ☐ Include Wood Framed Walls in Area-Weighted Average U-factor Calculation[1]

03	04	05	06	07	08	09	10	11	12	13
Tag/Plan Detail ID	Occupancy & Status	How Design U-factor was determined	Location	Frame Material, Spacing & Depth	Cavity Insulation per Design	Continuous Insulation per Design	Thermal Performance Unit	Required Thermal Performance[2]	U-factor per Design	Net Area[3] (ft²)
W-1	Nonresidential / Relocatable 1 CZ: New	JA4 Tables	Exterior	Wood 16" OC & 2x4- 1/2" gyp	R-13 / R-	None / R-	U-factor	0.059	per JA4 0.102 / per Software/ Other	

Reset | Add Row | Remove Last

[1] FOOTNOTE: If any individual assembly is non-compliant, assemblies may show compliance using an area-weighted calculation. Metal framed walls may not be combined with other wall types. Wood framed walls are combined with SIPs, spandrel & curtain, metal panel and straw bale wall types. The area-weighted compliance option is not available for alterations demonstrating compliance with R-values in Table 141.0-C.
[2] If "R-value" is shown in cell 10 as the Thermal Performance Unit, the R-value shown here is for cavity insulation per §141.0(b)2B.
[3] Wall area minus any fenestration area.

I. FLOOR ASSEMBLY SCHEDULE
This Section Does Not Apply

J. EXTERIOR DOOR SCHEDULE
This Section Does Not Apply

K. FENESTRATION AND GLAZED DOOR SCHEDULE
This Section Does Not Apply

CA Building Energy Efficiency Standards - 2019 Nonresidential Compliance: http://www.energy.ca.gov/title24/2019standards November 2019

STATE OF CALIFORNIA
Envelope Component Approach
NRCC-ENV-E (Created 11/19) CALIFORNIA ENERGY COMMISSION

CERTIFICATE OF COMPLIANCE			NRCC-ENV-E
Project Name:	Kessler Park Snack Bar - Snack Bar and Restroom Remodel, New Shade Construction	Report Page:	Page 5 of 6
Project Address:	18401 Jurupa Avenue, Bloomington CA 92316	Date Prepared	2022-05-22

L. DAYLIGHT IN LARGE ENCLOSED SPACES
This Section Does Not Apply

M. DECLARATION OF REQUIRED CERTIFICATES OF INSTALLATION

Table Instructions: Selections have been made based on information provided in previous tables of this document. If any selection needs to be changed, form user must provide an explanation to be added to Table D Exceptional Conditions. These documents must be provided to the building inspector during construction and can be found online at http://www.energy.ca.gov/2015publications/CEC-400-2015-033/appendices/forms/NRCI

YES	NO	Form/Title	Field Inspector Pass	Fail
◉	○	NRCI-ENV-01-E - Must be submitted for all buildings.	☐	☐

N. DECLARATION OF REQUIRED CERTIFICATES OF ACCEPTANCE

Table Instructions: Selections have been made based on information provided in previous tables of this document. If any selection needs to be changed, form user must provide an explanation to be added to Table D Exceptional Conditions. These documents must be provided to the building inspector during construction and can be found online at http://www.energy.ca.gov/2015publications/CEC-400-2015-033/appendices/forms/NRCA/. Individuals who perform the field testing and verification work, and provide the information required for completion of the fenestration Certificate of Acceptance documentation are not required to be licensed professionals. However, the person who signs the Certificate of Acceptance document to certify compliance with the acceptance requirements shall be licensed as specified in Standards Section 10-103(a)4 and NA7.3.1.

YES	NO	Form/Title	Field Inspector Pass	Fail
○	◉	NRCA-ENV-02-F - Must be submitted for all new, added or altered fenestration.	☐	☐
		NRCA-ENV-03-F - Daylighting design indoor lighting power adjustment factors (PAF). Note: The requirement for this NRCA is indicated on the NRCC-LTI (prescriptive) or NRCC-PRF (performance) because it is only relevant if a PAF is used for clerestories, daylight redirection devices or horizontal slats		

CA Building Energy Efficiency Standards - 2019 Nonresidential Compliance: http://www.energy.ca.gov/title24/2019standards November 2019

STATE OF CALIFORNIA
Envelope Component Approach
NRCC-ENV-E (Created 11/19) CALIFORNIA ENERGY COMMISSION

CERTIFICATE OF COMPLIANCE			NRCC-ENV-E
Project Name:	Kessler Park Snack Bar - Snack Bar and Restroom Remodel, New Shade Construction	Report Page:	Page 6 of 6
Project Address:	18401 Jurupa Avenue, Bloomington CA 92316	Date Prepared	2022-05-22

DOCUMENTATION AUTHOR'S DECLARATION STATEMENT

1. I certify that this Certificate of Compliance documentation is accurate and complete.

Documentation Author Name:	Kevin M. Friedman	Documentation Author Signature:	[signature]
Company	Engineering - Design - Analysis, Incorporated	Signature Date:	2022-05-22
Address:	10231 Slater Avenue Suite 207	CEA/ HERS Certification Identification (if applicable):	
City/State/Zip:	Fountain Valley CA 92708	Phone:	714-913-8393

RESPONSIBLE PERSON'S DECLARATION STATEMENT
I certify the following under penalty of perjury, under the laws of the State of California:
1. The information provided on this Certificate of Compliance is true and correct.
2. I am eligible under Division 3 of the Business and Professions Code to accept responsibility for the building design or system design identified on this Certificate of Compliance (responsible designer)
3. The energy features and performance specifications, materials, components, and manufactured devices for the building design or system design identified on this Certificate of Compliance conform to the requirements of Title 24, Part 1 and Part 6 of the California Code of Regulations.
4. The building design features or system design features identified on this Certificate of Compliance are consistent with the information provided on other applicable compliance documents, worksheets, calculations, plans and specifications submitted to the enforcement agency for approval with this building permit application.
5. I will ensure that a completed signed copy of this Certificate of Compliance shall be made available with the building permit(s) issued for the building, and made available to the enforcement agency for all applicable inspections. I understand that a completed signed copy of this Certificate of Compliance is required to be included with the documentation the builder provides to the building owner at occupancy.

Responsible Designer Name:	Kevin M. Friedman	Responsible Designer Signature:	[signature]
Company:	Engineering - Design - Analysis, Incorporated	Date Signed:	2022-05-22
Address:	10231 Slater Avenue Suite 207	License:	M-27267
City/State/Zip:	Fountain Valley CA 92708	Phone:	714-913-8393

CA Building Energy Efficiency Standards - 2019 Nonresidential Compliance: http://www.energy.ca.gov/title24/2019standards November 2019

STATE OF CALIFORNIA
Process Systems
NRCC-PRC-E (Created 11/19) CALIFORNIA ENERGY COMMISSION

CERTIFICATE OF COMPLIANCE			NRCC-PRC-E
Table Instructions: Include any process systems that are within the scope of the permit application and are demonstrating compliance with mandatory requirements in §120.6, or prescriptive requirements in §140.9. This compliance document is used for newly constructed, addition and alteration projects.			
Project Name:	Kessler Park Snack Bar - Snack Bar and Restroom Remodel, New Shade Construction	Report Page:	Page 1 of 5
Project Address:	18401 Jurupa Avenue, Bloomington CA 92316	Date Prepared	2022-09-27

A. GENERAL INFORMATION

01	Project Location (city)	Bloomington	04	Total Conditioned Floor Area	854
02	Climate Zone	10	05	Total Unconditioned Floor Area	521
03	Occupancy Types Within Project		06	# of Stories (Habitable Above Grade)	1

☐ Office ☐ Retail ☐ Non-refrigerated Warehouse ☐ Hotel/ Motel ☐ School ☐ Healthcare Facility ☐ High-Rise Residential ☐ Relocatable Class Bldg ☑ Other (Write In): Snack Bar

B. PROJECT SCOPE

Table Instructions: Include any process systems listed below within the scope of the permit application that are demonstrating compliance with mandatory requirements in §120.6 or prescriptive requirements in §140.9.

My project consists of (check all that apply):

01	02
☐ Refrigerated Spaces <3,000 ft² Total (no Title 24, Pt 6 requirements)	☐ Elevator Lighting & Ventilation Controls (mandatory §120.6(f))
☐ Refrigerated Spaces ≥3,000 ft² Total (mandatory §120.6(a))	☐ Escalator & Moving Walkway Speed Controls (mandatory §120.6(g))
☐ Food Stores > 8,000 ft² da (mandatory §120.6(b))	☐ Computer Rooms > 20W/ft² Power Density (prescriptive §140.9(a))[1]
☐ Enclosed Parking Garage Exhaust ≥ 10,000 cfm (mandatory §120.6(c))	☑ Commercial Kitchen Ventilation/Exhaust (prescriptive §140.9(b))[1]
☐ Newly Installed Process Boilers (mandatory §120.6(d))	☐ Laboratory Exhaust/Factory Exhaust & Fume Hood (prescriptive §140.9(c))[1]
☐ Compressed Air Systems Combined HP ≥ 25 (mandatory §120.6(e))	

FOOTNOTES: These building features can comply using the performance method. If using the performance method for these features, compliance should be demonstrated on the NRCC-PRF-E compliance document.

C. COMPLIANCE RESULTS

Table Instructions: If any cell on this table says "DOES NOT COMPLY" or "COMPLIES with Exceptional Conditions" refer to Table D. for guidance.

01	02	03	04	05	06	07	08	09	10	11
Refrigerated Warehouse/ Space §120.6(a)	Commercial Refrigeration §120.6(b)	Parking Garage Exhaust §120.6(c)	Process Boilers §120.6(d)	Compressed Air Systems §120.6(e)	Elevators §120.6(f)	Escalators & Moving Walkways §120.6(g)	Computer Rooms §140.9(a)	Commercial Kitchens §140.9(b)	Laboratory Exhaust §140.9(c)	Compliance Results
(See Table F)	(See Table G)	(See Table H)	(See Table I)	(See Table J)	(See Table K)	(See Table L)	(See Table M)	(See Table N)	(See Table O)	
								Yes		COMPLIES

CA Building Energy Efficiency Standards - 2019 Nonresidential Compliance: http://www.energy.ca.gov/title24/2019standards November 2019

STATE OF CALIFORNIA
Process Systems
NRCC-PRC-E (Created 11/19) CALIFORNIA ENERGY COMMISSION

CERTIFICATE OF COMPLIANCE			NRCC-PRC-E
Table Instructions: Include any process systems that are within the scope of the permit application and are demonstrating compliance with mandatory requirements in §120.6, or prescriptive requirements in §140.9. This compliance document is used for newly constructed, addition and alteration projects.			
Project Name:	Kessler Park Snack Bar - Snack Bar and Restroom Remodel, New Shade Construction	Report Page:	Page 2 of 5
Project Address:	18401 Jurupa Avenue, Bloomington CA 92316	Date Prepared	2022-09-27

D. EXCEPTIONAL CONDITIONS
This table is auto-filled with uneditable comments because of selections made or data entered in tables throughout the form.

No exceptional conditions apply to this project.

E. ADDITIONAL REMARKS
This table includes remarks made by the permit applicant to the Authority Having Jurisdiction.

F. REFRIGERATED WAREHOUSE/SPACES
This Section Does Not Apply

G. COMMERCIAL REFRIGERATION
This Section Does Not Apply

H. ENCLOSED PARKING GARAGE EXHAUST
This Section Does Not Apply

I. PROCESS BOILER
This Section Does Not Apply

J. COMPRESSED AIR SYSTEMS
This Section Does Not Apply

K. ELEVATOR LIGHTING AND VENTILATION
This Section Does Not Apply

L. ESCALATORS AND MOVING WALKWAYS SPEED CONTROLS
This Section Does Not Apply

CA Building Energy Efficiency Standards - 2019 Nonresidential Compliance: http://www.energy.ca.gov/title24/2019standards November 2019

STATE OF CALIFORNIA
Process Systems
NRCC-PRC-E (Created 11/19) CALIFORNIA ENERGY COMMISSION

CERTIFICATE OF COMPLIANCE			NRCC-PRC-E
Table Instructions: Include any process systems that are within the scope of the permit application and are demonstrating compliance with mandatory requirements in §120.6, or prescriptive requirements in §140.9. This compliance document is used for newly constructed, addition and alteration projects.			
Project Name:	Kessler Park Snack Bar - Snack Bar and Restroom Remodel, New Shade Construction	Report Page:	Page 3 of 5
Project Address:	18401 Jurupa Avenue, Bloomington CA 92316	Date Prepared	2022-09-27

M. COMPUTER ROOM SYSTEM SUMMARY
This Section Does Not Apply

N. COMMERCIAL KITCHEN EXHAUST AND VENTILATION

Table Instructions: Complete the following table to demonstrate compliance with prescriptive requirements found in §140.9(b). Requirements only apply to new hoods or replacement hoods being installed as part of the permitted scope. Existing hoods not being replaced, or any hoods within a healthcare facility do not need to meet requirements.

Kitchen Ventilation §140.9(b)2

01	☐ Existing kitchen hoods not being replaced as part of an addition or alteration (do not need to meet requirements)
	Requirements
	Replacement Air to Hood Compliance Method §140.9(b)1A
02	Providing replacement air directly to the hood(s) that does not exceed 10% of the hood(s) exhaust rate.
	Mechanically cooled or heated makeup air delivered to any space with a kitchen hood is designed per 140.9(b)2A to not exceed the greater of:
03	The supply flow required to meet the space heating and cooling load
05	The kitchen /dining facility has a total Type I and Type II kitchen hood exhaust airflow rate > 5000 cfm and is dsign to have one of the following per 140.9(b)2B: NA: Not a kitchen /dining facility having a total Type I and Type II kitchen hood exhaust airflow rate > 5,000 cfm

Kitchen Exhaust: Airflow Rate §140.9(b)2

01	Kitchen Name or Tag	Kitchen	Compliance Method per §140.9(b)1B	NA: Kitchen/ dining facility has a total Type I and Type II hood exhaust rate < 5,000 cfm.		
02	03	04	05	06	07	08
Name or Item Tag	Hood Type[1]	Hood Style	Hood Length (ft)	Equipment Duty	Design Hood Exhaust Rate (CFM)	Max Hood Exhaust Rate Allowed (CFM)
H-1	Type I				2,400	

Add Hood | Remove Last | Add Kitchen | Remove Last

[1] FOOTNOTE: Type II hoods do not have a max hood exhaust air rate per Part 6 §1409(b)1B

CA Building Energy Efficiency Standards - 2019 Nonresidential Compliance: http://www.energy.ca.gov/title24/2019standards November 2019

STATE OF CALIFORNIA
Process Systems
NRCC-PRC-E (Created 11/19) CALIFORNIA ENERGY COMMISSION

CERTIFICATE OF COMPLIANCE			NRCC-PRC-E
Table Instructions: Include any process systems that are within the scope of the permit application and are demonstrating compliance with mandatory requirements in §120.6, or prescriptive requirements in §140.9. This compliance document is used for newly constructed, addition and alteration projects.			
Project Name:	Kessler Park Snack Bar - Snack Bar and Restroom Remodel, New Shade Construction	Report Page:	Page 4 of 5
Project Address:	18401 Jurupa Avenue, Bloomington CA 92316	Date Prepared	2022-09-27

O. LABORATORY AND FACTORY EXHAUST AND FUME HOODS
This Section Does Not Apply

P. DECLARATION OF REQUIRED CERTIFICATES OF INSTALLATION

Table Instructions: Selections have been made based on information provided in previous tables of this document. If any selection needs to be changed, please explain why in Table E. Additional Remarks. These documents must be provided to the building inspector during construction and can be found online at https://ww2.energy.ca.gov/title24/2019standards/2019_compliance_documents/Nonresidential_Documents/NRCI/

YES	NO	Form/Title	Field Inspector Pass	Fail
◉	○	NRCI-PRC-01-E Covered Process	☐	☐

Q. DECLARATION OF REQUIRED CERTIFICATES OF ACCEPTANCE

Table Instructions: Selections have been made based on information provided in previous tables of this document. If any selection needs to be changed, please explain why in Table E. Additional Remarks. These documents must be provided to the building inspector during construction and can be found online at https://ww2.energy.ca.gov/title24/2019standards/2019_compliance_documents/Nonresidential_Documents/NRCA/

YES	NO	Form/Title	Field Inspector Pass	Fail
○	◉	NRCA-PRC-01-F Compressed Air Systems	☐	☐
◉	○	NRCA-PRC-02-F Kitchen Exhaust	☐	☐
○	◉	NRCA-PRC-03-F Garage Exhaust	☐	☐
○	◉	NRCA-PRC-04-F Refrigerated Warehouses - Evaporator Fan Motor Controls	☐	☐
○	◉	NRCA-PRC-05-F Refrigerated Warehouses - Evaporative Condenser Controls	☐	☐
○	◉	NRCA-PRC-06-Refrigerated Warehouses - Air Cooled Condenser Controls	☐	☐
○	◉	NRCA-PRC-16-Refrigerated Warehouses - Adiabatic Condenser Controls	☐	☐
○	◉	NRCA-PRC-07 Refrigerated Warehouses - Variable Speed Compressor	☐	☐
○	◉	NRCA-PRC-08-F Refrigerated Warehouses - Electric Resistance Underslab Heating System	☐	☐
○	◉	NRCA-PRC-12-F Elevator Lighting & Ventilation Controls	☐	☐
○	◉	NRCA-PRC-13-F Escalators & Moving Walkways Speed Controls	☐	☐
○	◉	NRCA-PRC-14-F Lab Exhaust Ventilation Systems	☐	☐
○	◉	NRCA-PRC-15-F Fume Hood Automatic Sash Closure Systems	☐	☐

CA Building Energy Efficiency Standards - 2019 Nonresidential Compliance: http://www.energy.ca.gov/title24/2019standards November 2019

STATE OF CALIFORNIA
Process Systems
NRCC-PRC-E (Created 11/19) CALIFORNIA ENERGY COMMISSION

CERTIFICATE OF COMPLIANCE			NRCC-PRC-E
Table Instructions: Include any process systems that are within the scope of the permit application and are demonstrating compliance with mandatory requirements in §120.6, or prescriptive requirements in §140.9. This compliance document is used for newly constructed, addition and alteration projects.			
Project Name:	Kessler Park Snack Bar - Snack Bar and Restroom Remodel, New Shade Construction	Report Page:	Page 5 of 5
Project Address:	18401 Jurupa Avenue, Bloomington CA 92316	Date Prepared	2022-09-27

DOCUMENTATION AUTHOR'S DECLARATION STATEMENT

1. I certify that this Certificate of Compliance documentation is accurate and complete.

Documentation Author Name:	Kevin M. Friedman	Documentation Author Signature:	[signature]
Company	Engineering - Design - Analysis, Inc.	Signature Date:	2022-09-27
Address:	10231 Slater Avenue Suite 207	CEA/ HERS Certification Identification (if applicable):	
City/State/Zip:	Fountain Valley CA 92708	Phone:	(714) 913-8393

RESPONSIBLE PERSON'S DECLARATION STATEMENT
I certify the following under penalty of perjury, under the laws of the State of California:
1. The information provided on this Certificate of Compliance is true and correct.
2. I am eligible under Division 3 of the Business and Professions Code to accept responsibility for the building design or system design identified on this Certificate of Compliance (responsible designer)
3. The energy features and performance specifications, materials, components, and manufactured devices for the building design or system design identified on this Certificate of Compliance conform to the requirements of Title 24, Part 1 and Part 6 of the California Code of Regulations.
4. The building design features or system design features identified on this Certificate of Compliance are consistent with the information provided on other applicable compliance documents, worksheets, calculations, plans and specifications submitted to the enforcement agency for approval with this building permit application.
5. I will ensure that a completed signed copy of this Certificate of Compliance shall be made available with the building permit(s) issued for the building, and made available to the enforcement agency for all applicable inspections. I understand that a completed signed copy of this Certificate of Compliance is required to be included with the documentation the builder provides to the building owner at occupancy.

Responsible Designer Name:	Kevin M. Friedman	Responsible Designer Signature:	[signature]
Company:	Engineering - Design - Analysis, Inc.	Date Signed:	2022-09-27
Address:	10231 Slater Avenue Suite 207	License:	M-27267
City/State/Zip:	Fountain Valley CA 92708	Phone:	(714) 913-8393

Add Responsible Person

CA Building Energy Efficiency Standards - 2019 Nonresidential Compliance: http://www.energy.ca.gov/title24/2019standards November 2019

TITLE 24 – ENVELOPE, PROCESS SYSTEMS

BOA Architecture Interiors Planning
1511 Cota Ave. Long Beach, CA 90813 Tel. 562-912-7900

KESSLER PARK SNACK BAR
SNACK BAR, RESTROOM REMODEL & NEW SHADE STRUCTURE
18401 JURUPA AVE, BLOOMINGTON, CA 92316

NO.	DATE	REV.	BY	CHK

Designer: KMF
CAD Draft: PT
Architect: LOK
Engineer: KMF
Client: BLOOMINGTON CITY
Date Issue: 02-21-2023
Job Number: 2939

TITLE 24 – ENVELOPE, PROCESS SYSTEMS

M4.0

These drawings and accompanying, as instruments of service, are the exclusive property of the Architect and their use and publication shall be restricted to the original site for which they were prepared. Re-use, reproduction or publication by any method, in whole or part, is prohibited
by written permission from the Architect. Title to these plans and specifications shall remain with the Architect without prejudice, and visual contact with them shall constitute prima facie evidence of acceptance of these restrictions.

G:\Project Files\2939 SB County SDD Kessler Park Snack Bar\01-Drawings\01-Revit\3-CD\Kessler Park Snack Bar_detached.rvt
12/15/2022 11:12:41 AM