WARNING: ALL INDIVIDUALS INTERESTED IN BIDDING ON THIS PROJECT MUST OBTAIN THE FINAL PLANS AND SPECIFICATIONS FROM THE DEPARTMENT MANAGING THE PROJECT OR AS OTHERWISE STATED IN THE ADVERTISEMENT FOR BIDS FOR THE PROJECT. DO NOT USE THE PLANS AND SPECIFICATIONS POSTED ON THE CLERK OF THE BOARD'S WEBSITE FOR BIDDING ON THIS PROJECT.

SAN BERNARDINO COUNTY
DEPARTMENT OF PUBLIC WORKS

SAN BERNARDINO
COUNTY
PUBLIC WORKS

TRANSPORTATION
PLANS FOR CONSTRUCTION ON

NEWMARK ELEMENTARY SCHOOL SIDEWALKS

VARIOUS LOCATIONS

ARROWHEAD FARMS AREA

FEDERAL-AID PROJECT/CASE NUMBER: CNTY-23-03L/0291

WORK ORDER NO. H15204 ROAD NO. 342150-025, 361950-025 & 812600-010

LENGTH = 0.62 MILES

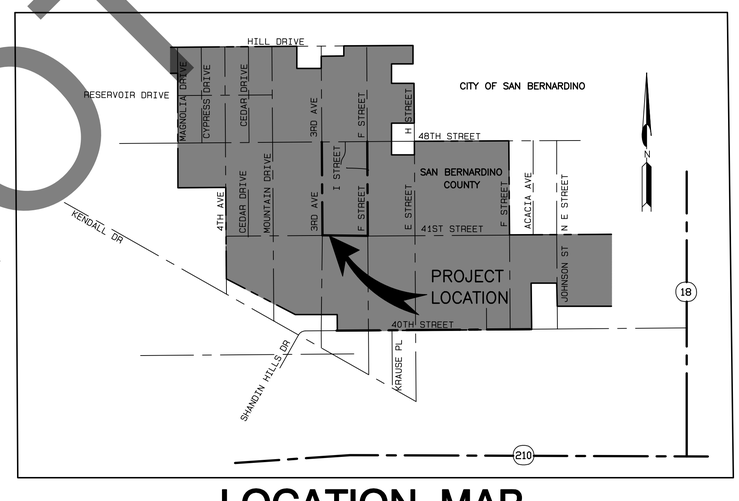

LOCATION MAP
NOT TO SCALE

SAN BERNARDINO COUNTY

APPROVED BY: _____ 6/26/24
NOEL CASTILLO, P.E., DIRECTOR OF PUBLIC WORKS R.C.E. 78044 DATE

NOT FOR BID

FILE NO. 342150-025, 361950-025
812600-010

MARK	REVISIONS	APPR.	DATE

MARK	REVISIONS	APPR.	DATE

FILE NO. 342150-025, 361950-025
812600-010

MARK	CHANGES		
	NO CHANGES	RESIDENT ENGINEER	DATE

FIELD CHANGES	SHT. NO.	TOT. SHT'S.
	1	14

INDEX OF SHEETS

1	TITLE SHEET
2	NOTES AND LEGEND
3	DETAILS
4	PLAN AND PROFILE 3RD AVENUE STA 30+00 TO STA 37+50
5	PLAN AND PROFILE 3RD AVENUE STA 37+50 TO STA 43+00
6	PLAN AND PROFILE 41ST STREET STA 10+00 TO STA 16+00
7	PLAN AND PROFILE F STREET STA 40+00 TO STA 47+00
8	PLAN AND PROFILE F STREET STA 47+00 TO STA 53+00
9	DRIVEWAY DETAILS – 3RD AVENUE DW–1 TO DW–8
10	DRIVEWAY DETAILS – 3RD AVENUE DW–9 TO DW–16
11	DRIVEWAY DETAILS – 41ST STREET DW–17 TO DW–20
12	DRIVEWAY DETAILS – F STREET DW–21 TO DW–28
13	DRIVEWAY DETAILS – F STREET DW–29 TO DW–36
14	DRIVEWAY DETAILS – F STREET DW–37 TO DW–42

THE FOLLOWING SPECIAL DRAWINGS AND COUNTY STANDARDS ARE ATTACHED TO THE SPECIAL PROVISIONS:

109(M)	115	116	128A
300	303	303A	303B
310	312	312A(M)	313

THE FOLLOWING SPPWC STANDARD PLANS DATED 2021 ARE ATTACHED TO THE SPECIAL PROVISIONS:

111(M)	112–2	523–2

TO BE SUPPLEMENTED BY THE FOLLOWING CALTRANS STANDARD PLANS DATED 2023:

A88A	A24D	A24E	A24F
A24G	T9	T10	T13
T13B			

TO BE SUPPLEMENTED BY THE FOLLOWING CA MUTCD 2014 (REVISION 8):

2A–2(CA)	3B–102(CA)	3H–101(CA)	6H–28
6H–29	SECTION 6D.01	SECTION 6D.02	

THIS PROJECT REQUIRES A CONTRACTOR'S LICENSE CLASS "A, C8 OR C12"

GENERAL NOTES

U. THE FACT THAT ANY UTILITY FACILITY IS SHOWN OR NOT SHOWN UPON THE PLANS SHALL NOT RELIEVE THE CONTRACTOR OF THE RESPONSIBILITY UNDER SECTION 5–1.36 C "NON–HIGHWAY FACILITIES" OF THE CALTRANS STANDARD SPECIFICATIONS. IT SHALL BE THE CONTRACTOR'S RESPONSIBILITY, PURSUANT THERETO, TO ASCERTAIN THE LOCATION OF ANY UTILITY FACILITY WHICH MAY BE SUBJECT TO DAMAGE BY REASON OF THE CONTRACTOR'S OPERATIONS.

1. ALL STATIONING NOTES ON PLAN REFER TO THE CL IMP 41ST STREET OR SIDE STREET.
2. DIMENSIONS ARE SUBJECT TO TOLERANCES SPECIFIED IN THE CALTRANS STANDARD SPECIFICATIONS.
3. ALL PAVEMENT WIDTH DIMENSIONS SHOWN ON THE PLANS ARE TO THE EDGE OF PAVEMENT OR TO THE TOP OF CURB, UNLESS OTHERWISE NOTED.
4. TRANSITIONS AND WARPING SHALL BE AS SHOWN AND AS DETERMINED BY THE ENGINEER.
5. ASPHALT CONCRETE OVERLAYS SHALL BE FEATHERED TO MEET EXISTING AS SHOWN ON THE PLANS OR AS DETERMINED BY THE ENGINEER.
6. ALL TREES & VEGETATION OUTSIDE THE LIMITS OF EXCAVATION AND EMBANKMENT SLOPE LINES, SHALL BE PROTECTED IN PLACE.

BASIS OF BEARINGS:

COORDINATES ARE CCS83 ZONE 5, NAD–83 EPOCH(1992.88) BASED ON RTK BASE POSITION OCCUPYING CONTROL POINT HVC–2 PER LITTLE MOUNTAIN BASIN PROJECT JL#10830.

BENCH MARK:

FOUND 1"IP w/SBCo TAG, Dn 0.3', AT INTERSECTION OF MOUNTAIN AVE & 41st STREET PER CSFB 4050/1290. NGVD–29 ELEVATION = 1370.94'

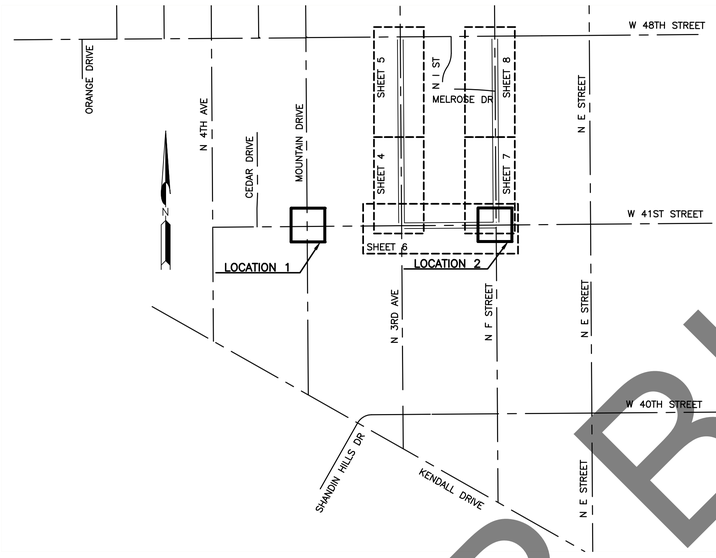

INDEX MAP

NTS

RAMP TABLE:		
LOCATION:	RAMPS:	SHEET NUMBER:
LOCATION 1	41ST STREET @ MOUNTIAN DRIVE, RAMP 1	SHEET NUMBER 3
LOCATION 2	41ST STREET @ F STREET, RAMP 2	SHEET NUMBER 3

DRIVEWAY TABLE:		
ROAD:	DRIVEWAY:	SHEET NUMBER:
3RD AVENUE	DRIVEWAY 1–8	SHEET NUMBER 9
3RD AVENUE	DRIVEWAY 9–16	SHEET NUMBER 10
41ST STREET	DRIVEWAY 17–20	SHEET NUMBER 11
F STREET	DRIVEWAY 21–28	SHEET NUMBER 12
F STREET	DRIVEWAY 29–36	SHEET NUMBER 13
F STREET	DRIVEWAY 37–42	SHEET NUMBER 14

ABBREVIATIONS LEGEND:

AC	=	ASPHALT CONCRETE
AP	=	ANGLE POINT
AVE	=	AVENUE
BEG	=	BEGINNING
BCR	=	BEGIN CURB RETURN
BPR	=	BEGIN PAVEMENT RETURN
C&G	=	CURB AND GUTTER
CL	=	CENTER LINE
CLF	=	CHAIN LINK FENCE
DR	=	DRIVE
DW	=	DRIVEWAY
DWG	=	DRAWING
ECR	=	END OF CURB RETURN
EG	=	EXISTING GRADE
EL	=	ELEVATION
EP	=	EDGE OF PAVEMENT
EPR	=	END OF PAVEMENT RETURN
EXIST	=	EXISTING
FCD	=	FLOOD CONTROL DISTRICT
FG	=	FINISHED GRADE
FH	=	FIRE HYDRANT
FL	=	FLOW LINE
GW	=	GUY WIRE
H	=	HEIGHT
LT	=	LEFT
MAX	=	MAXIMUM
MB	=	MAILBOX
MIN	=	MINIMUM
NTS	=	NOT TO SCALE
PEC	=	PERMIT TO ENTER AND CONSTRUCT
PI	=	POINT OF INTERSECTION
PL	=	PROPERTY LINE
PP	=	POWER POLE
RT	=	RIGHT
R/W	=	RIGHT OF WAY
SBC	=	SAN BERNARDINO COUNTY
SHT	=	SHEET
SS	=	STREET SIGN
ST	=	STREET
STA	=	STATION
STD	=	STANDARD
SUR	=	SURVEY
SDWK	=	SIDEWALK
TC	=	TOP OF CURB
THK	=	THICKNESS
W	=	WIDTH

RAMP 1 — RAMP NUMBER LABEL

1 — CURB RETURN NUMBER

CONSTRUCTION MATERIALS

PLAN

- ASPHALT CONCRETE OVERLAY
- ASPHALT CONCRETE PAVEMENT
- COLD PLANE/MILL AND OVERLAY
- PORTLAND CEMENT CONCRETE

SECTION

- ASPHALT CONCRETE OVERLAY
- ASPHALT CONCRETE PAVEMENT
- NATURAL GROUND
- PORTLAND CEMENT CONCRETE SECTION

UNDERGROUND UTILITY LEGEND

GAS LINE	G
SEWER MAIN LINE	S
WATER LINE	W
ELECTRIC LINE	E
TELEPHONE LINE	T
DATA/CABLE LINE	T F

- PROPOSED SLOPE
- EXISTING SLOPE
- X — PROPOSED FENCE

CONSTRUCTION NOTES:

P	PROTECT IN PLACE
U	UTILITY VALVE COVER TO BE RELOCATED BY OTHERS
1	COLD PLANE (0.17' THK) EXISTING ASPHALT CONCRETE PAVEMENT AND PLACE (0.17' THK) ASPHALT CONCRETE OVERLAY PER TYPICAL SECTION AS SHOWN ON SHEET 3
2	SAWCUT AND REMOVE EXISTING ASPHALT CONCRETE SURFACING
3	SAWCUT AND REMOVE EXISTING CONCRETE SURFACING
4	SAWCUT AND REMOVE EXISTING ASPHALT CONCRETE DIKE AND/OR TRAVERSBLE DIKE
5	SAWCUT AND REMOVE EXISTING CURB, RETAINING CURB OR CURB AND GUTTER
6	REMOVE AND REPLACE IN KIND 4' HIGH CHAINLINK FENCE PER COUNTY STD 300
7	REMOVE AND DISPOSE OF TREE OR STUMP, SEE SPECIAL PROVISIONS
8	RELOCATE ROAD SIGN PER CA MUTCD 2014, FIG 2A–2(CA)
9	REMOVE AND DISPOSE OF LARGE ROCKS.
10	REPAINT "STOP" PAVEMENT MARKNG PER CALTRANS 2023 STANDARD PLAN A24D AS SHOWN ON PLAN
11	INSTALL 6" RETAINING CURB PER CALTRANS STD A88A
12	CONSTRUCT CONCRETE MOUNTABLE CURB PER SPPWC STANDARD DETAIL 121–3 TYPE C2–6(150) HEIGHT PER PLAN
13	CONSTRUCT 8" CURB AND GUTTER PER COUNTY STD DWG 115
14	REPAINT "AHEAD" PAVEMENT MARKNG PER CALTRANS 2023 STANDARD PLAN A24D AS SHOWN ON PLAN
15	PLACE DETECTABLE WARNING SURFACE PER CALTRANS STD A88A
16	PLACE ASPHALT CONCRETE OVER COMPACTED NATIVE SOIL PER TYPICAL SECTION AS SHOWN ON SHEET 3
17	CONSTRUCT (0.33' THICK) CONCRETE SIDEWALK PER COUNTY STD 109(M) TYPE C
18	CONSTRUCT CONCRETE DRIVEWAY APPROACH PER COUNTY STD 128A, SEE DRIVEWAY SECTION DETAIL SHEETS 9–14
19	CONSTRUCT (0.33' THICK) CONCRETE SURFACING
20	CONSTRUCT (0.25' THICK) ASPHALT CONCRETE SURFACING
21	RESET ROAD SIGN PER COUNTY STD 303, 303A, 303B AND/OR 313 PER PLAN.
22	RESET OR RELOCATE MAILBOX PER COUNTY STD 312 AND/OR 312(M)
23	ADJUST METER BOX/UTILITY BOX TO FINISHED GRADE
24	CONSTRUCT RAMP PER CALTRANS RSP A88A CASE PER PLAN
25	PAINT LIMIT LINE (STOP LINE) PAVEMENT MARKNG PER CALTRANS 2023 STANDARD PLAN A24E AS SHOWN ON PLAN
26	CONSTRUCT 6" TRAVERSABLE CURB AND GUTTER PER SPPWC STANDARD DETAIL 111(M), SEE SECTION ON SHEET 3
27	CONSTRUCT 6" CURB AND GUTTER PER COUNTY STD DWG 115
28	REMOVE EXISTING ROADSIDE SIGN AS SHOWN ON PLAN
29	REPAINT YELLOW LADDER CROSSWALK IN KIND PER CALTRANS 2023 STANDARD PLAN A24F
30	REPAINT YELLOW "SCHOOL" PAVEMENT MARKING PER CALTRANS 2023 STANDARD PLAN A24D AS SHOWN ON PLAN
31	REMOVE EXISTING ROADSIDE SIGN AS SHOWN ON PLAN
32	INSTALL ROADSIDE SIGN PER CA MUTCD 2014 FIGURE 2A–2(CA) AND COUNTY STANDARD 303A AD 303B
33	INSTALL SURFACE MOUNTED CHANNELIZER (TYPE F, FLEXIBLE BASE) PER CA MUTCD 2014 FIG. 3H–101(CA)

NOT FOR BID

FILE NO. 342150–025, 361950–025
812600–010

MARK	DATE	APPR.	REVISIONS

MARK	CHANGES		DATE
	NO CHANGES	RESIDENT ENGINEER	

FIELD CHANGES

REGISTERED PROFESSIONAL ENGINEER — CHRIS NGUYEN — NO. C63582 — CIVIL — STATE OF CALIFORNIA

SAN BERNARDINO COUNTY
DEPARTMENT OF PUBLIC WORKS

DESIGNED BY:	DRAWN BY:	CHECKED BY:	RECOMMENDED BY:	
DC	DC	NM	CHRIS NGUYEN, P.E. ENGINEERING MANAGER	6/18/2024 DATE
NOEL MONDRAGON, P.E. SUPERVISING ENGINEER			APPROVED BY: MERVAT N. MOUME, P.E. DEPUTY DIRECTOR	6/18/2024 DATE; 6/25/2024 DATE

NEWMARK ELEMENTARY SCHOOL SIDEWALKS

NOTES AND LEGEND

ARROWHEAD FARM AREA

J.L. REF.	W.O. NO.	PLAN SCALE	SHT. NO.	TOT. SHT'S.
JL12127	H15204	AS SHOWN	2	14

FILE NO. 342150–025, 361950–025
812600–010

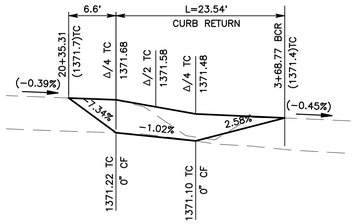

NORTHEAST CORNER MOUNTAIN DRIVE & 41ST STREET PROFILE

SCALE: 1"=10'

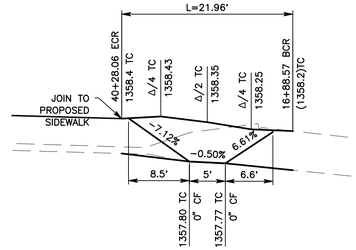

NORTHEAST CORNER F STREET & 41ST STREET PROFILE

SCALE: 1"=10'

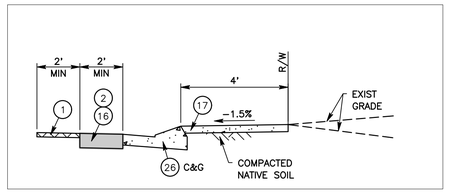

TRAVERSABLE CURB AND GUTTER SECTION DETAIL

SCALE: 1"=10'

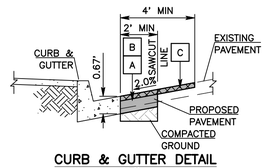

CURB & GUTTER DETAIL

NTS

STRUCTURAL SECTION DETAIL NOTES

A	SAWCUT AND REMOVE ASPHALT CONCRETE SURFACING TO DEPTH OF 0.67'
B	PLACE 0.67' THICK AC TYPE A OVER COMPACTED NATIVE SOIL
C	COLD PLANE (0.17' THK) EXISTING ASPHALT CONCRETE PAVEMENT AND PLACE (0.17' THK)

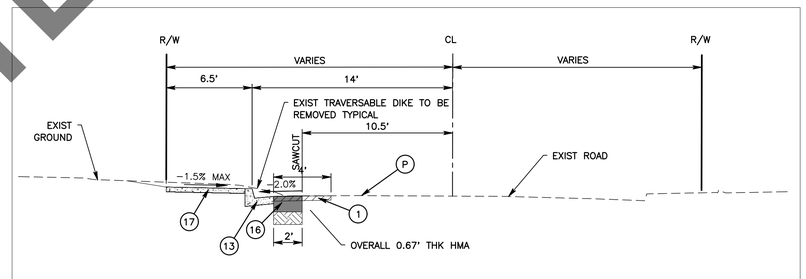

TYPICAL SECTION
3rd AVE
(NTS)

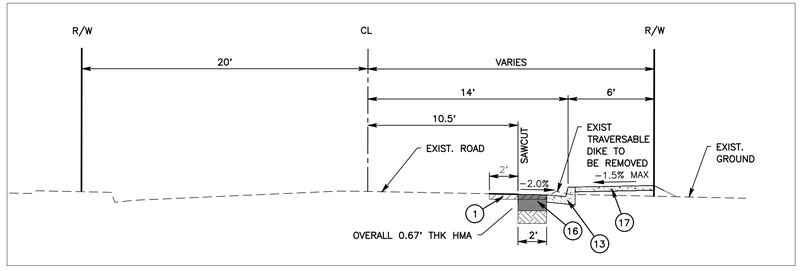

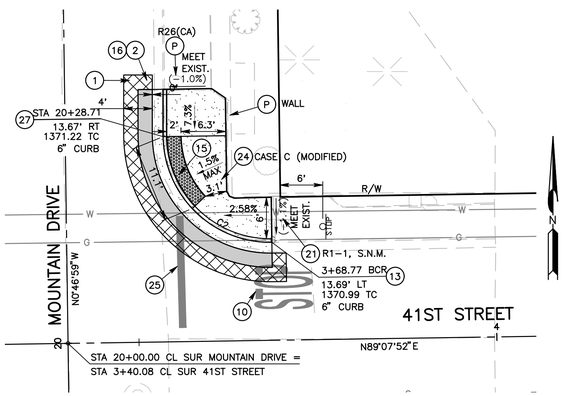

NORTHEAST CORNER MOUNTAIN DRIVE & 41ST STREET

SCALE: 1"=10'

LOCATION 1

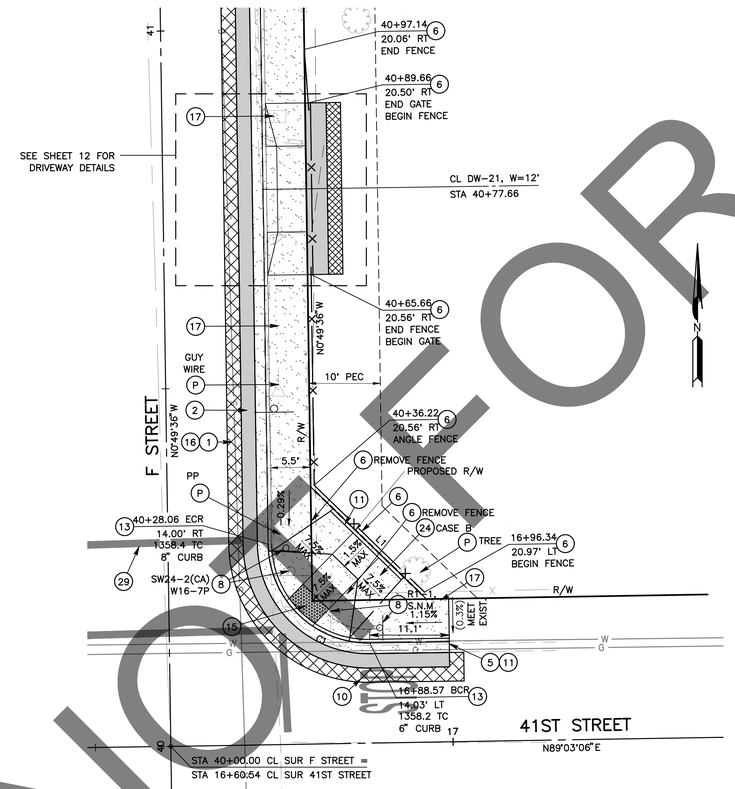

NORTHEAST CORNER F STREET & 41ST STREET

SCALE: 1"=10'

LOCATION 2

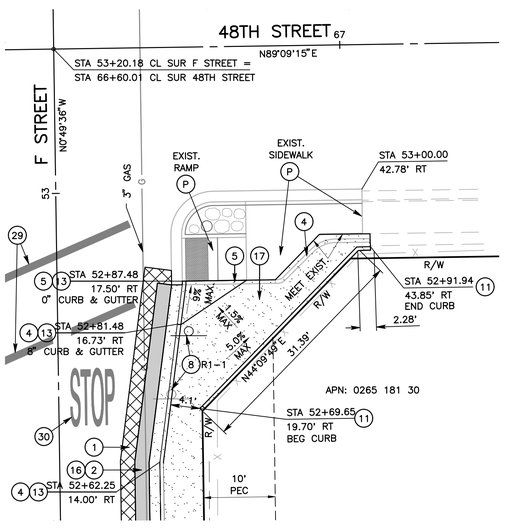

SOUTHEAST CORNER F STREET & 48TH STREET

SCALE: 1"=10'

LINE TABLE		
L#	LENGTH	BEARING
L1	21.471	N45° 53' 15.35"W

E.P. OR T.C. RETURN DATA				
C#	RADIUS	DELTA	LENGTH	TANGENT
C1	14.00'	089°52'42"	21.96'	13.97'
C2	15.00'	089°54'53"	23.54'	14.98'

CONSTRUCTION NOTES:

P	PROTECT IN PLACE
1	COLD PLANE (0.17' THK) EXISTING ASPHALT CONCRETE PAVEMENT AND PLACE (0.17' THK) ASPHALT CONCRETE OVERLAY PER TYPICAL SECTION AS SHOWN ON THIS SHEET
2	SAWCUT AND REMOVE EXISTING ASPHALT CONCRETE SURFACING
4	SAWCUT AND REMOVE EXISTING ASPHALT CONCRETE DIKE AND/OR TRAVERSBLE DIKE
5	SAWCUT AND REMOVE EXISTING CURB, RETAINING CURB OR CURB AND GUTTER
6	REMOVE AND REPLACE IN KIND 4' HIGH CHAINLINK FENCE PER COUNTY STD 300
8	RELOCATE ROAD SIGN PER CA MUTCD 2014, FIG 2A-2(CA)
10	REPAINT "STOP" PAVEMENT MARKNG PER CALTRANS 2023 STANDARD PLAN A24D AND AS SHOWN ON PLAN
11	INSTALL 6" RETAINING CURB PER CALTRANS STD A88A
13	CONSTRUCT 8" CURB AND GUTTER PER COUNTY STD DWG 115
15	PLACE DETECTABLE WARNING SURFACE PER CALTRANS STD A88A
16	PLACE ASPHALT CONCRETE OVER COMPACTED NATIVE SOIL PER TYPICAL SECTION AS SHOWN ON THIS SHEET
17	CONSTRUCT (0.33' THICK) CONCRETE SIDEWALK PER COUNTY STD 109(M) TYPE C
21	RESET ROAD SIGN PER COUNTY STD 303, 303A, 303B AND/OR 313 PER PLAN.
22	RESET OR RELOCATE MAILBOX PER COUNTY STD 312 AND/OR 312(M)
24	CONSTRUCT RAMP PER CALTRANS RSP A88A CASE PER PLAN
25	REPAINT LIMIT LINE (STOP LINE) PAVEMENT MARKNG PER CALTRANS 2023 STANDARD PLAN A24E AS SHOWN ON PLAN
26	CONSTRUCT 6" TRAVERSABLE CURB AND GUTTER PER SPPWC STANDARD DETAIL 111(M), SEE SECTION ON THIS SHEET
29	REPAINT YELLOW LADDER CROSSWALK IN KIND PER CALTRANS 2023 STANDARD PLAN A24F
30	REPAINT YELLOW "SCHOOL" PAVEMENT MARKING PER CALTRANS 2023 STANDARD PLAN A24D AS SHOWN ON PLAN

FILE NO. 342150-025, 361950-025
812600-010

NOT FOR BID

MARK	CHANGES		DATE
	NO CHANGES	RESIDENT ENGINEER	

FIELD CHANGES

REGISTERED PROFESSIONAL ENGINEER CHRIS NGUYEN NO. C63582 CIVIL STATE OF CALIFORNIA

SAN BERNARDINO COUNTY
DEPARTMENT OF PUBLIC WORKS

DESIGNED BY:	DRAWN BY:	CHECKED BY:	RECOMMENDED BY:	
DC	DC	NM	CHRIS. NGUYEN, P.E. ENGINEERING MANAGER	6/18/2024 DATE

		APPROVED BY:	
NOEL MONDRAGON, P.E. SUPERVISING ENGINEER	06/18/2024 DATE	MEHRAT N. MOSAD, P.E. DEPUTY DIRECTOR	6/26/2024 DATE

NEWMARK ELEMENTARY SCHOOL SIDEWALKS

DETAILS

ARROWHEAD FARM AREA

J.L. REF.	W.O. NO.	PLAN SCALE	SHT. NO.	TOT. SHT'S.
JL12127	H15204	AS SHOWN	3	14

MARK	DESCRIPTION	APPR.	DATE

REVISIONS

FILE NO. 342150-025, 361950-025
812600-010

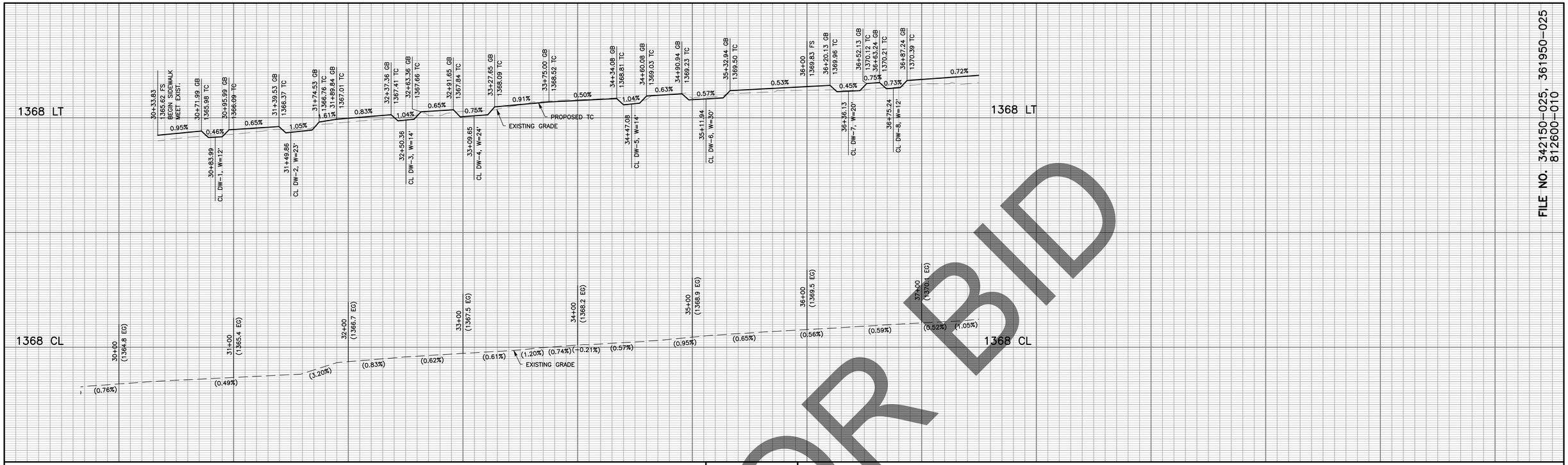

FILE NO. 342150-025, 361950-025
812600-010

PROFILE

SCALE: HORIZ 1"=40'
VERT 1"=4'

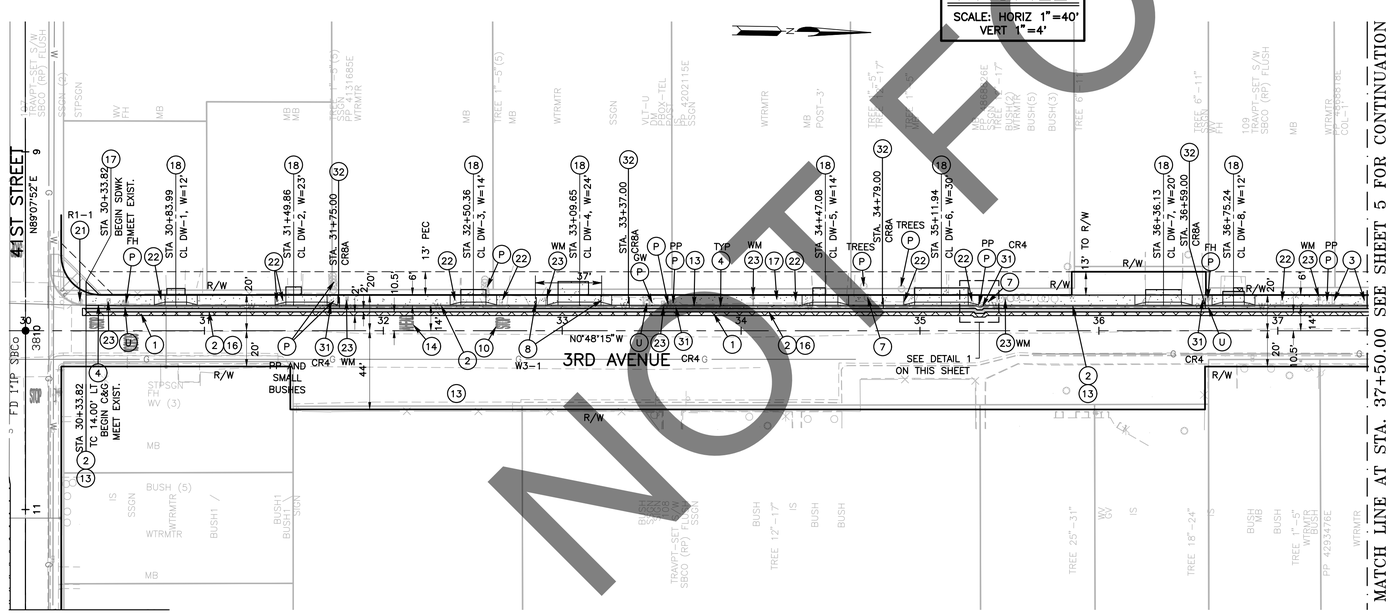

41ST STREET
SEE SHEET 6 OF14

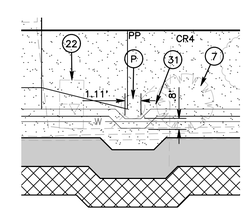

DETAIL 1
1"=5'

○	CONSTRUCTION NOTES:
P	PROTECT IN PLACE
U	UTILITY VALVE COVER TO BE RELOCATED BY OTHERS
1	COLD PLANE (0.17' THK) EXISTING ASPHALT CONCRETE PAVEMENT AND PLACE (0.17' THK) ASPHALT CONCRETE OVERLAY PER TYPICAL SECTION AS SHOWN ON SHEET 3
2	SAWCUT AND REMOVE EXISTING ASPHALT CONCRETE SURFACING
3	SAWCUT AND REMOVE EXISTING CONCRETE/BRICK SURFACING
4	SAWCUT AND REMOVE EXISTING ASPHALT CONCRETE DIKE AND/OR TRAVERSABLE DIKE
7	REMOVE AND DISPOSE OF TREE OR STUMP, SEE SPECIAL PROVISIONS
8	RELOCATE ROAD SIGN PER CA MUTCD 2014, FIG 2A-2(CA)
10	REPAINT "STOP" PAVEMENT MARKNG PER CALTRANS 2023 STANDARD PLAN A24D AS SHOWN ON PLAN
13	CONSTRUCT 8" CURB AND GUTTER PER COUNTY STD 115
14	REPAINT "AHEAD" PAVEMENT MARKNG PER CALTRANS 2023 STANDARD PLAN A24D AS SHOWN ON PLAN
16	PLACE ASPHALT CONCRETE OVER COMPACTED NATIVE SOIL PER TYPICAL SECTION AS SHOWN ON SHEET 3
17	CONSTRUCT (0.33' THICK) CONCRETE SIDEWALK PER COUNTY STD 109(M) TYPE C
18	CONSTRUCT CONCRETE DRIVEWAY APPROACH PER COUNTY STD 128A, SEE DRIVEWAY SECTION DETAIL SHEETS 9-14
21	RESET ROAD SIGN PER COUNTY STD 303, 303A, 303B AND/OR 313 PER PLAN
22	RESET OR RELOCATE MAILBOX PER COUNTY STD 312 AND/OR 312(M)
23	ADJUST METER BOX/UTILITY BOX TO FINISHED GRADE
28	REMOVE EXISTING ROADSIDE SIGN AS SHOWN ON PLAN
31	REMOVE EXISTING ROADSIDE SIGN AS SHOWN ON PLAN
32	INSTALL ROADSIDE SIGN PER CA MUTCD 2014 FIGURE 2A-2(CA) AND COUNTY STANDARD 303A AD 303B

CR8A

TOW-AWAY
NO STOPPING
NO PARKING
ANY TIME
C.C.S.52 - 0132

WHITE ON RED
RED ON WHITE
18"X24"
LINE 1&4 - 3" SERIES C
LINES 2,3&5 - 2" SERIES D

PROPOSED SIGN DETAIL

NOT FOR BID

GRAPHIC SCALE 1"=40'
0 40 80 120

MARK	CHANGES		
	NO CHANGES	RESIDENT ENGINEER	DATE

FIELD CHANGES

REGISTERED PROFESSIONAL ENGINEER CHRIS NGUYEN NO. C63582 CIVIL STATE OF CALIFORNIA

SAN BERNARDINO COUNTY
DEPARTMENT OF PUBLIC WORKS

DESIGNED BY:	DRAWN BY:	CHECKED BY:	RECOMMENDED BY:
DC	DC	NM	CHRIS NGUYEN, P.E. ENGINEERING MANAGER — DATE 6/18/2024

NOEL MONDRAGON, P.E. SUPERVISING ENGINEER — DATE 06/18/2024

APPROVED BY: MERVAT N. SHAHAIL, P.E. DEPUTY DIRECTOR — DATE 6/25/2024

NEWMARK ELEMENTARY SCHOOL SIDEWALKS

PLAN AND PROFILE 3RD AVENUE
STA 30+00 TO STA 37+50
ARROWHEAD FARM AREA

J.L. REF.	W.O. NO.	PLAN SCALE	SHT. NO.	TOT. SHT'S.
JL12127	H15204	AS SHOWN	4	14

MARK	REVISIONS	APPR.	DATE

MARK	REVISIONS	APPR.	DATE

FILE NO. 342150-025, 361950-025
812600-010

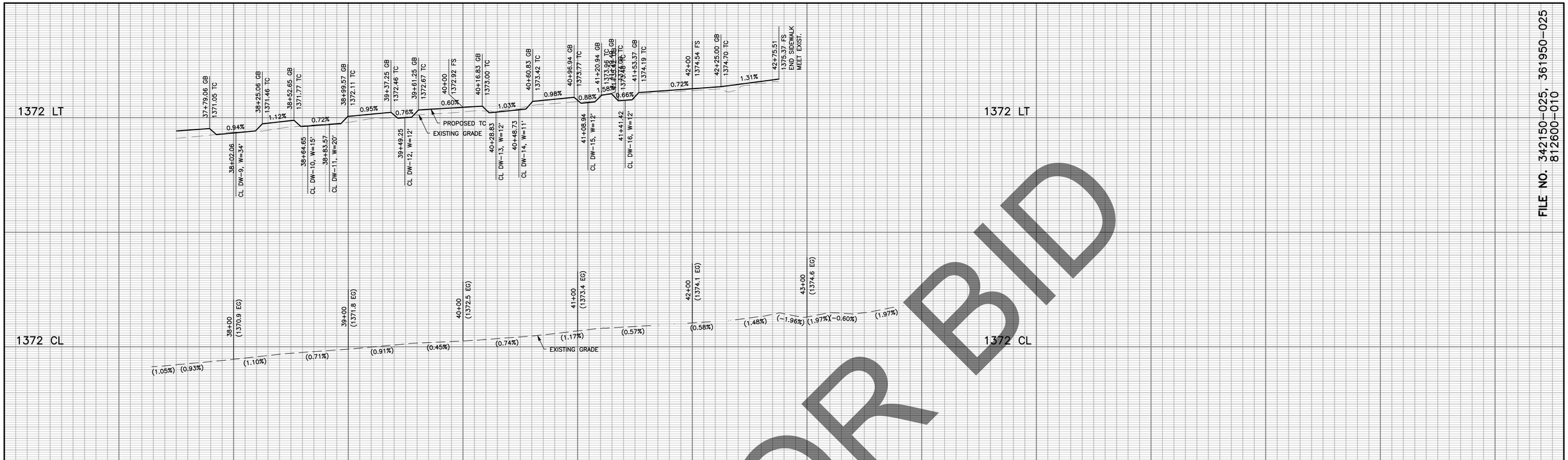

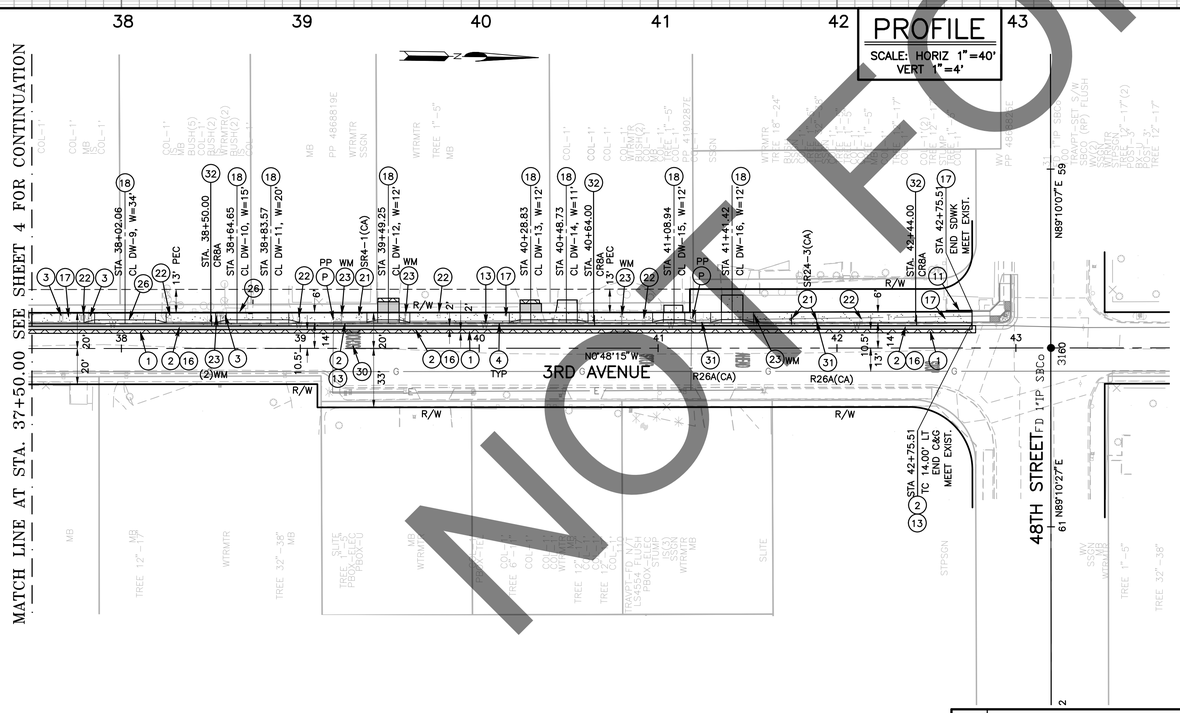

	CONSTRUCTION NOTES:
P	PROTECT IN PLACE
1	COLD PLANE (0.17' THK) EXISTING ASPHALT CONCRETE PAVEMENT AND PLACE (0.17' THK) ASPHALT CONCRETE OVERLAY PER TYPICAL SECTION AS SHOWN ON SHEET 3
2	SAWCUT AND REMOVE EXISTING ASPHALT CONCRETE SURFACING
3	SAWCUT AND REMOVE EXISTING CONCRETE/BRICK SURFACING
4	SAWCUT AND REMOVE EXISTING ASPHALT CONCRETE DIKE AND/OR TRAVERSABLE DIKE
11	INSTALL 6" RETAINING CURB PER CALTRANS STD A88A
13	CONSTRUCT 8" CURB AND GUTTER PER COUNTY STD 115
16	PLACE ASPHALT CONCRETE OVER COMPACTED NATIVE SOIL PER TYPICAL SECTION AS SHOWN ON SHEET 3
17	CONSTRUCT (0.33' THICK) CONCRETE SIDEWALK PER COUNTY STD 109(M) TYPE C
18	CONSTRUCT CONCRETE DRIVEWAY APPROACH PER COUNTY STD 128A, SEE DRIVEWAY SECTION DETAIL SHEETS 9–14
21	RESET ROAD SIGN PER COUNTY STD 303, 303A, 303B AND/OR 313 PER PLAN
22	RESET OR RELOCATE MAILBOX PER COUNTY STD 312 AND/OR 312(M)
23	ADJUST METER BOX/UTILITY BOX TO FINISHED GRADE
26	CONSTRUCT 6" TRAVERSABLE CURB AND GUTTER PER SPPWC STANDARD DETAIL 111(M), SEE SECTION ON SHEET 3
30	REPAINT YELLOW "SCHOOL" PAVEMENT MARKING PER CALTRANS 2023 STANDARD PLAN A24D AS SHOWN ON PLAN
31	REMOVE EXISTING ROADSIDE SIGN AS SHOWN ON PLAN
32	INSTALL ROADSIDE SIGN PER CA MUTCD 2014 FIGURE 2A–2(CA) AND COUNTY STANDARD 303A AD 303B

CR8A

TOW-AWAY
NO STOPPING
NO PARKING
ANY TIME
C.C.S.52 - 0132

WHITE ON RED
RED ON WHITE
18"X24"
LINE 1&4 – 3" SERIES C
LINES 2,3&5 – 2" SERIES D

PROPOSED SIGN DETAIL

MARK	DATE	APPR.	REVISIONS

FILE NO. 342150–025, 361950–025
812600–010

MARK	CHANGES		
	NO CHANGES	RESIDENT ENGINEER	DATE

FIELD CHANGES

REGISTERED PROFESSIONAL ENGINEER CHRIS NGUYEN NO. C63582 CIVIL STATE OF CALIFORNIA

SAN BERNARDINO COUNTY
DEPARTMENT OF PUBLIC WORKS

DESIGNED BY:	DRAWN BY:	CHECKED BY:	RECOMMENDED BY:
DC	DC	NM	CHRIS NGUYEN, P.E. ENGINEERING MANAGER — DATE 6/18/2024

NOEL MONDRAGON, P.E. SUPERVISING ENGINEER — DATE 06/18/2024

APPROVED BY: MERYAT N. MISHAIL, P.E. DEPUTY DIRECTOR — DATE 6/25/2024

NEWMARK ELEMENTARY SCHOOL SIDEWALKS

PLAN AND PROFILE 3RD AVENUE
STA 37+50 TO STA 43+00
ARROWHEAD FARM AREA

J.L. REF.	W.O. NO.	PLAN SCALE	SHT. NO.	TOT. SHT'S.
JL12127	H15204	AS SHOWN	5	14

FILE NO. 342150–025, 361950–025
812600–010

NOT FOR BID

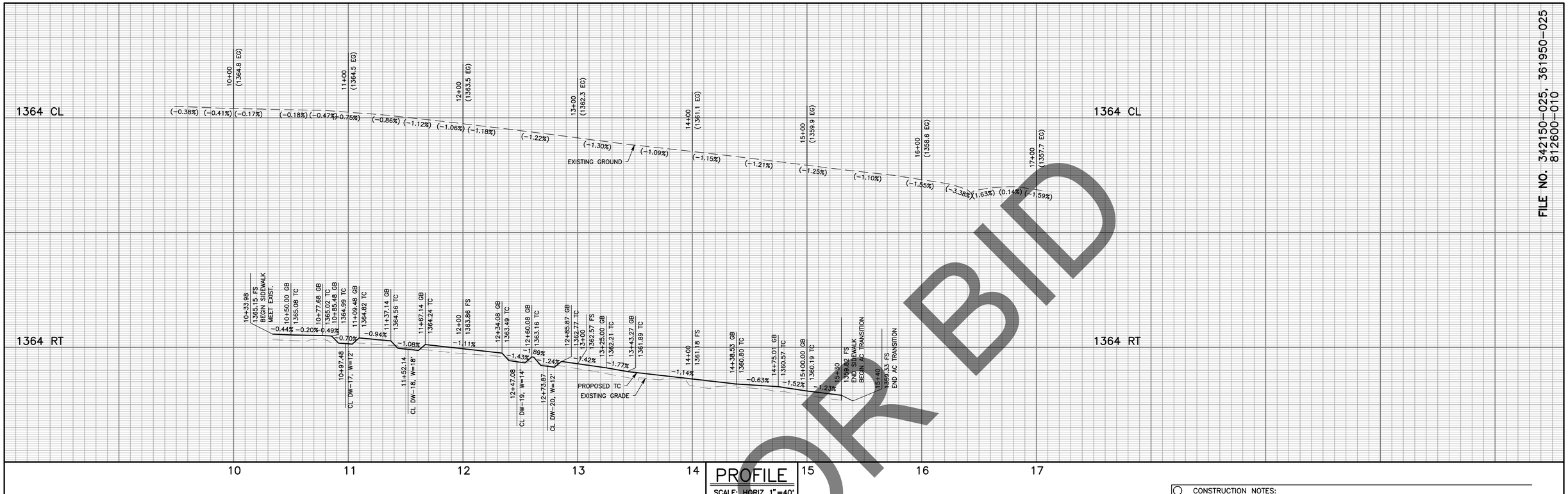

PROFILE

SCALE: HORIZ 1"=40'
VERT 1"=4'

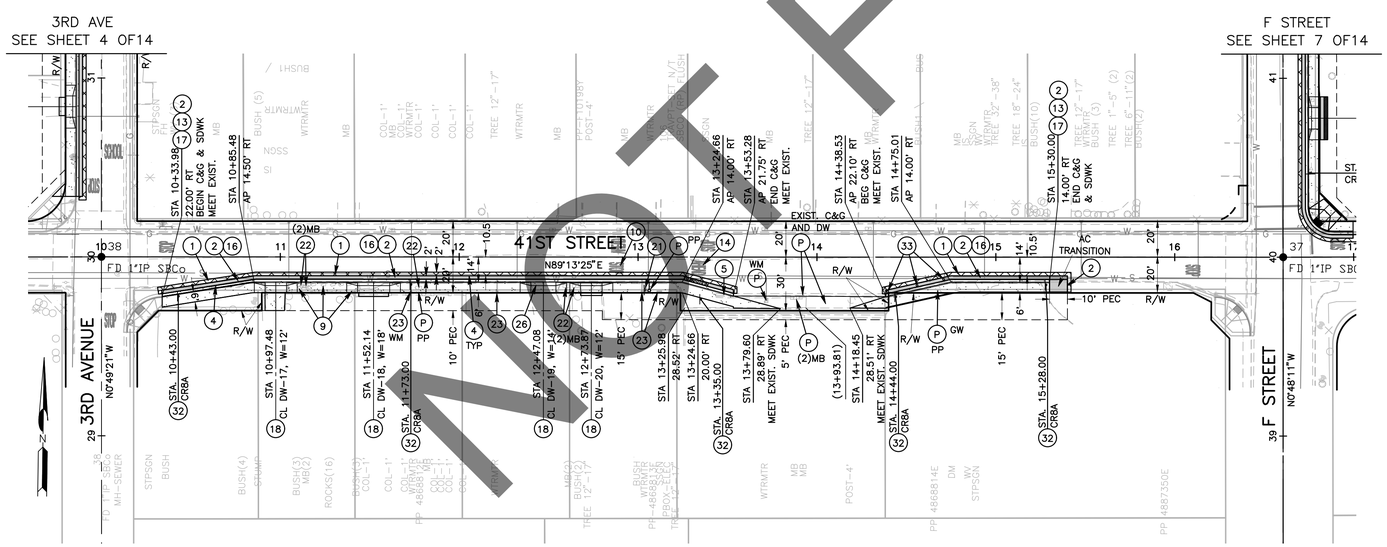

	CONSTRUCTION NOTES:
P	PROTECT IN PLACE
1	COLD PLANE (0.17' THK) EXISTING ASPHALT CONCRETE PAVEMENT AND PLACE (0.17' THK) ASPHALT CONCRETE OVERLAY PER TYPICAL SECTION AS SHOWN ON SHEET 3
2	SAWCUT AND REMOVE EXISTING ASPHALT CONCRETE SURFACING
4	SAWCUT AND REMOVE EXISTING ASPHALT CONCRETE DIKE AND/OR TRAVERSBLE DIKE
5	SAWCUT AND REMOVE EXISTING CURB, RETAINING CURB OR CURB AND GUTTER
9	REMOVE AND DISPOSE OF LARGE ROCKS
10	PAINT "STOP" PAVEMENT MARKING PER CALTRANS 2023 STANDARD A24D AS SHOWN ON PLAN
13	CONSTRUCT 8" CURB AND GUTTER PER COUNTY STD 115
14	PAINT "AHEAD" PAVEMENT MARKING PER CALTRANS 2023 STANDARD PLAN A24D AS SHOWN ON PLAN
16	PLACE ASPHALT CONCRETE OVER COMPACTED NATIVE SOIL PER TYPICAL SECTION AS SHOWN ON SHEET 3
17	CONSTRUCT (0.33' THICK) CONCRETE SIDEWALK PER COUNTY STD 109(M) TYPE C
18	CONSTRUCT CONCRETE DRIVEWAY APPROACH PER COUNTY STD 128A, SEE DRIVEWAY SECTION DETAIL SHEETS 9–14
21	RESET ROAD SIGN PER COUNTY STD 303, 303A, 303B AND/OR 313 PER PLAN
22	RESET OR RELOCATE MAILBOX PER COUNTY STD 312 AND/OR 312(M)
23	ADJUST METER BOX/UTILITY BOX TO FINISHED GRADE
26	CONSTRUCT 6" TRAVERSABLE CURB AND GUTTER PER SPPWC STANDARD DETAIL 111(M), SEE SECTION ON SHEET 3
30	REPAINT YELLOW "SCHOOL" PAVEMENT MARKING PER CALTRANS 2023 STANDARD PLAN A24D AS SHOWN ON PLAN
31	REMOVE EXISTING ROADSIDE SIGN AS SHOWN ON PLAN
32	INSTALL ROADSIDE SIGN PER CA MUTCD 2014 FIGURE 2A–2(CA) AND COUNTY STANDARD 303A AD 303B
33	INSTALL SURFACE MOUNTED CHANNELIZER (TYPE F, FLEXIBLE BASE) PER CA MUTCD 2014 FIG. 3H–101(CA)

CR8A

TOW-AWAY
NO STOPPING
NO PARKING
ANY TIME
C.C.S.52 - 0132

WHITE ON RED
RED ON WHITE
18"X24"
LINE 1&4 – 3" SERIES C
LINES 2,3&5 – 2" SERIES D

PROPOSED SIGN DETAIL

GRAPHIC SCALE 1"=40'
0 40 80 120

MARK	CHANGES		
	NO CHANGES	RESIDENT ENGINEER	DATE

FIELD CHANGES

REGISTERED PROFESSIONAL ENGINEER CHRIS NGUYEN NO. C63582 CIVIL STATE OF CALIFORNIA

SAN BERNARDINO COUNTY
DEPARTMENT OF PUBLIC WORKS

DESIGNED BY:	DRAWN BY:	CHECKED BY:	RECOMMENDED BY:
DC	DC	NM	CHRIS NGUYEN, P.E. ENGINEERING MANAGER — DATE 6/18/2024

NOEL MONDRAGON, P.E. SUPERVISING ENGINEER — DATE 06/18/2024

APPROVED BY: MERVAT N. MIKHAIL, P.E. DEPUTY DIRECTOR — DATE 6/25/2024

NEWMARK ELEMENTARY SCHOOL SIDEWALKS

PLAN AND PROFILE 41ST STREET
STA 10+00 TO STA 16+00
ARROWHEAD FARM AREA

J.L. REF.	W.O. NO.	PLAN SCALE	SHT. NO.	TOT. SHT'S.
JL12127	H15204	AS SHOWN	6	14

MARK	REVISIONS	APPR.	DATE

FILE NO. 342150–025, 361950–025
812600–010

MARK	REVISIONS	APPR.	DATE

FILE NO. 342150–025, 361950–025
812600–010

NOT FOR BID

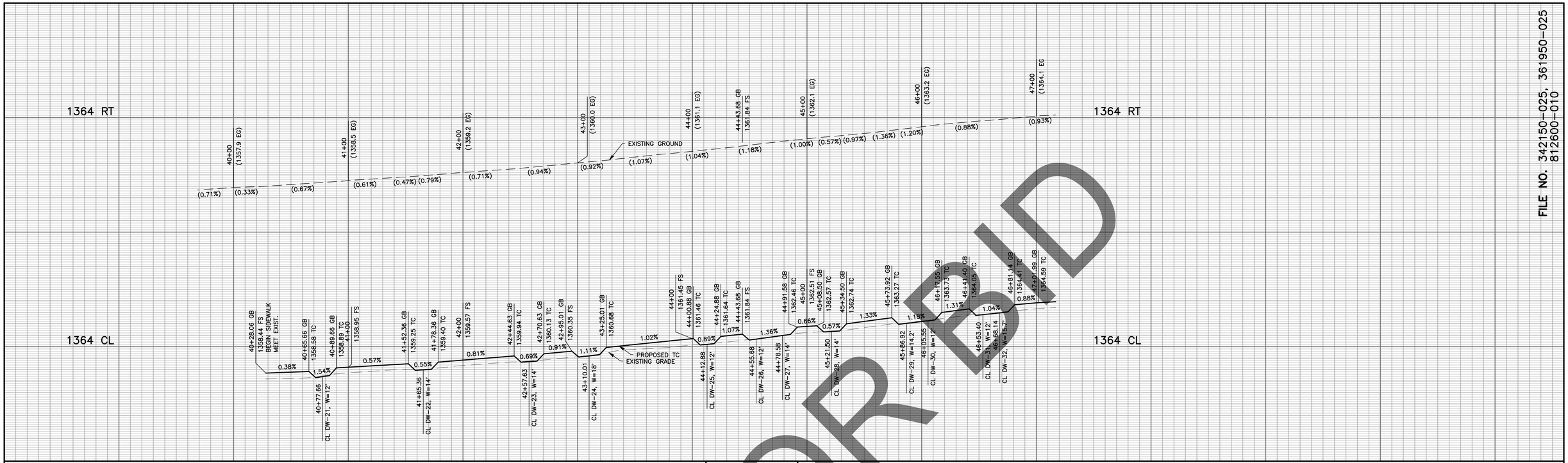

PROFILE

SCALE: HORIZ 1"=40'
VERT 1"=4'

FILE NO. 342150-025, 361950-025
812600-010

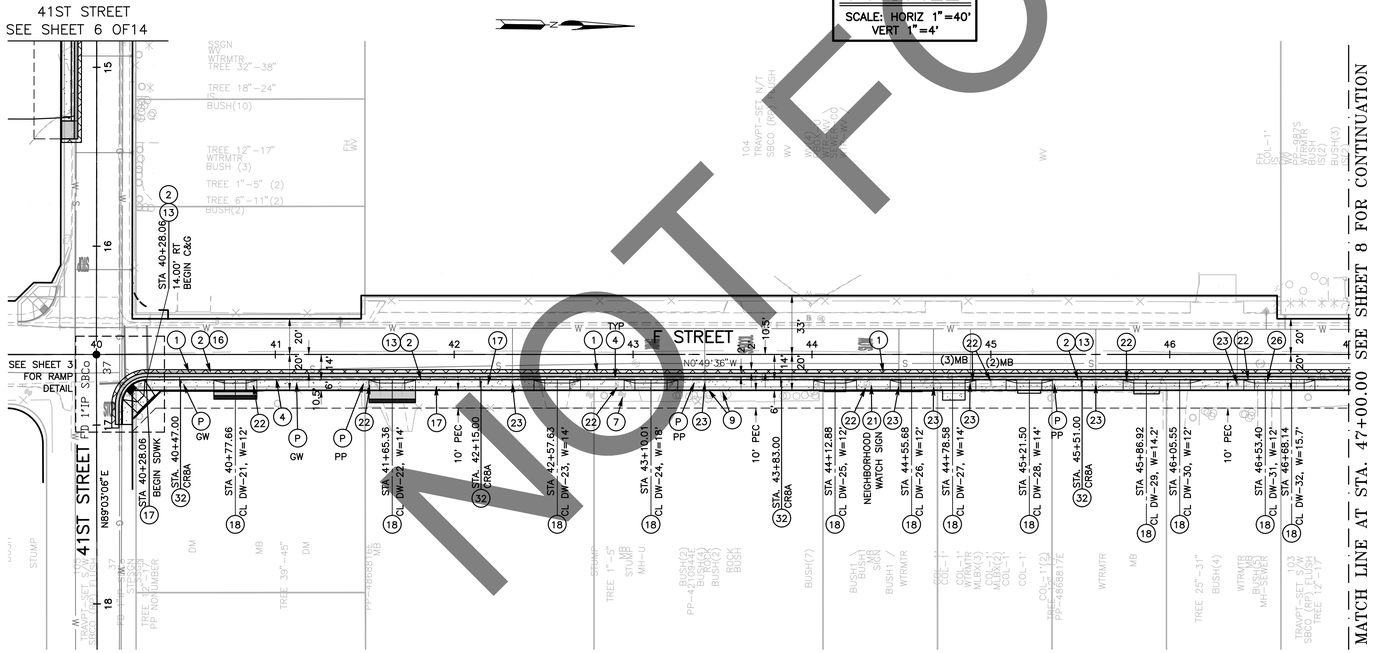

	CONSTRUCTION NOTES:
P	PROTECT IN PLACE
1	COLD PLANE (0.17' THK) EXISTING ASPHALT CONCRETE PAVEMENT AND PLACE (0.17' THK) ASPHALT CONCRETE OVERLAY PER TYPICAL SECTION AS SHOWN ON SHEET 3
2	SAWCUT AND REMOVE EXISTING ASPHALT CONCRETE SURFACING
4	SAWCUT AND REMOVE EXISTING ASPHALT CONCRETE DIKE AND/OR TRAVERSABLE DIKE
7	REMOVE AND DISPOSE OF TREE OR STUMP, SEE SPECIAL PROVISIONS
9	REMOVE AND DISPOSE OF LARGE ROCKS
13	CONSTRUCT 8" CURB AND GUTTER PER COUNTY STD 115
16	PLACE ASPHALT CONCRETE OVER COMPACTED NATIVE SOIL PER TYPICAL SECTION AS SHOWN ON SHEET 3
17	CONSTRUCT (0.33' THICK) CONCRETE SIDEWALK PER COUNTY STD 109(M) TYPE C
18	CONSTRUCT CONCRETE DRIVEWAY APPROACH PER COUNTY STD 128A, SEE DRIVEWAY SECTION DETAIL SHEETS 9-14
21	RESET ROAD SIGN PER COUNTY STD 303, 303A, 303B AND/OR 313 PER PLAN
22	RESET OR RELOCATE MAILBOX PER COUNTY STD 312 AND/OR 312(M)
23	ADJUST METER BOX/UTILITY BOX TO FINISHED GRADE
32	INSTALL ROADSIDE SIGN PER CA MUTCD 2014 FIGURE 2A-2(CA) AND COUNTY STANDARD 303A AND 303B

CR8A

WHITE ON RED
RED ON WHITE
18"X24"
LINE 1&4 - 3" SERIES C
LINES 2,3&5 - 2" SERIES D

PROPOSED SIGN DETAIL

GRAPHIC SCALE 1"=40'
0 40 80 120

MARK	CHANGES		DATE
	NO CHANGES	RESIDENT ENGINEER	

FIELD CHANGES

REGISTERED PROFESSIONAL ENGINEER CHRIS NGUYEN NO. C63582 CIVIL STATE OF CALIFORNIA

SAN BERNARDINO COUNTY
DEPARTMENT OF PUBLIC WORKS

DESIGNED BY:	DRAWN BY:	CHECKED BY:	RECOMMENDED BY:
DC	DC	NM	CHRIS NGUYEN, P.E. ENGINEERING MANAGER — DATE 6/18/2024

NOEL MONDRAGON, P.E. SUPERVISING ENGINEER — DATE 06/18/2024

APPROVED BY: MERVAT N. MIKHAIL, P.E. DEPUTY DIRECTOR — DATE 6/25/2024

NEWMARK ELEMENTARY SCHOOL SIDEWALKS

PLAN AND PROFILE F STREET
STA 40+00 TO STA 47+00
ARROWHEAD FARM AREA

J.L. REF.	W.O. NO.	PLAN SCALE	SHT. NO.	TOT. SHT'S.
JL12127	H15204	AS SHOWN	7	14

MARK	REVISIONS	APPR.	DATE

FILE NO. 342150-025, 361950-025
812600-010

NOT FOR BID

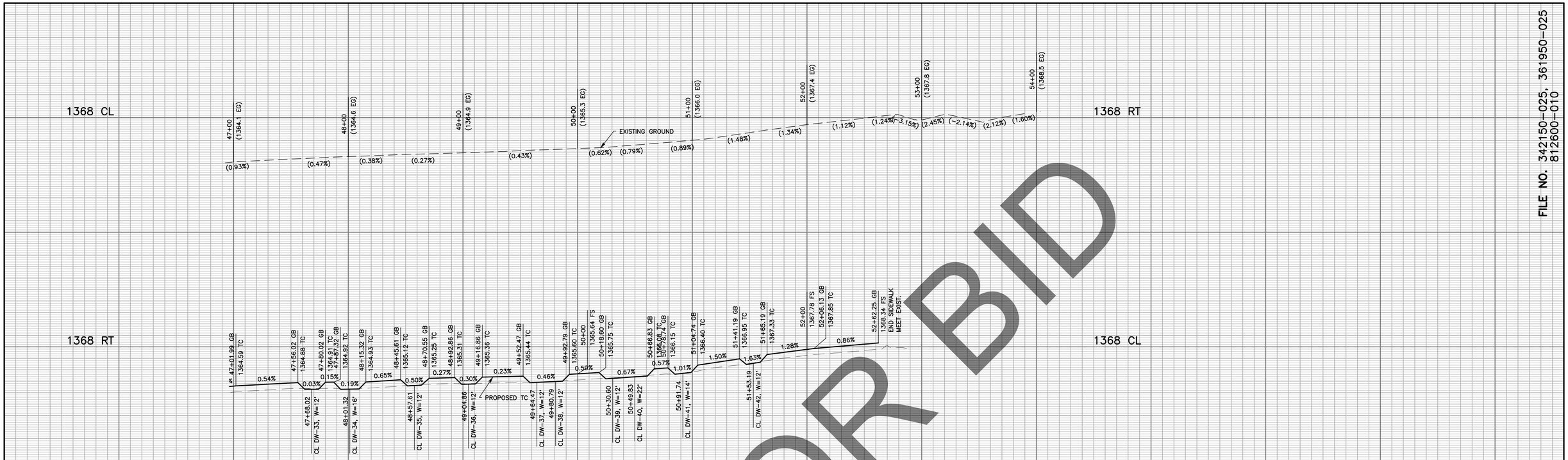

PROFILE

SCALE: HORIZ 1"=40'
VERT 1"=4'

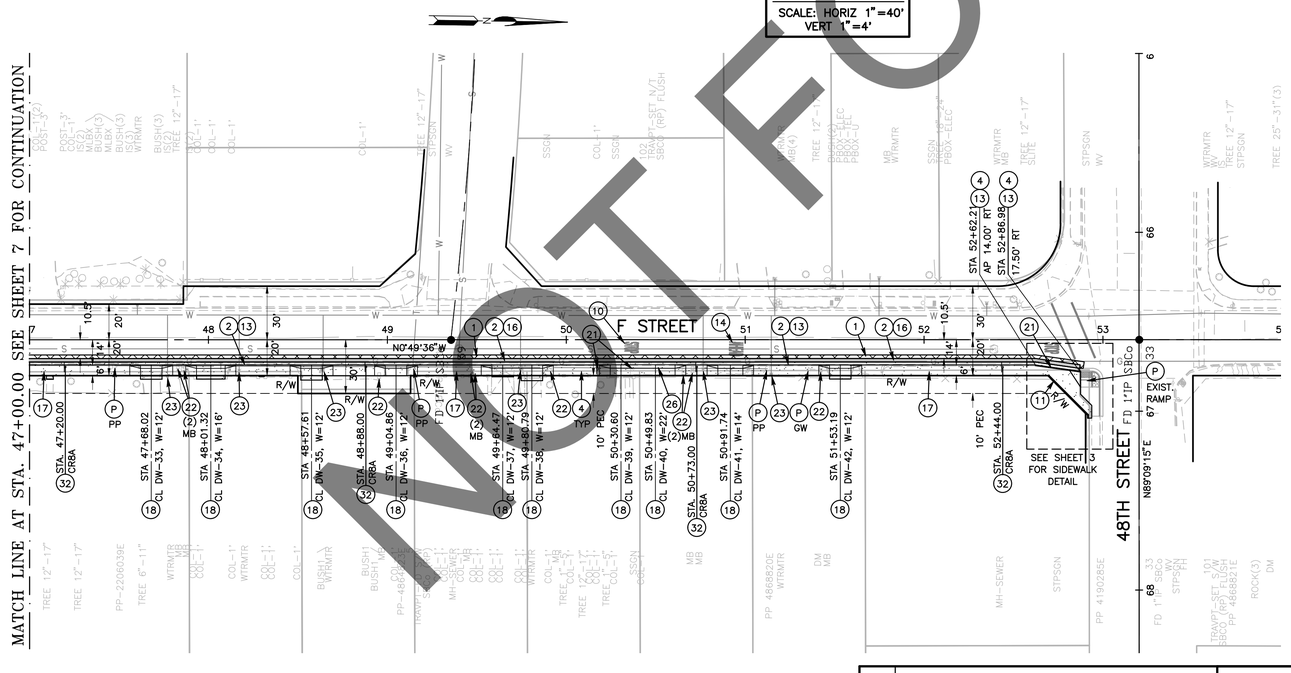

CONSTRUCTION NOTES:

P	PROTECT IN PLACE
1	COLD PLANE (0.17' THK) EXISTING ASPHALT CONCRETE PAVEMENT AND PLACE (0.17' THK) ASPHALT CONCRETE OVERLAY PER TYPICAL SECTION AS SHOWN ON SHEET 3
2	SAWCUT AND REMOVE EXISTING ASPHALT CONCRETE SURFACING
4	SAWCUT AND REMOVE EXISTING ASPHALT CONCRETE DIKE AND/OR TRAVERSBLE DIKE
10	REPAINT "STOP" PAVEMENT MARKNG PER CALTRANS 2023 STANDARD PLAN A24D AS SHOWN ON PLAN
11	INSTALL 6" RETAINING CURB PER CALTRANS STD A88A
13	CONSTRUCT 8" CURB AND GUTTER PER COUNTY STD DWG 115
14	REPAINT "AHEAD" PAVEMENT MARKNG PER CALTRANS 2023 STANDARD PLAN A24D AS SHOWN ON PLAN
16	PLACE ASPHALT CONCRETE OVER COMPACTED NATIVE SOIL PER TYPICAL SECTION AS SHOWN ON SHEET 3
17	CONSTRUCT (0.33' THICK) CONCRETE SIDEWALK PER COUNTY STD 109(M) TYPE C
18	CONSTRUCT CONCRETE DRIVEWAY APPROACH PER COUNTY STD 128A, SEE DRIVEWAY SECTION DETAIL SHEETS 9–14
21	RESET ROAD SIGN PER COUNTY STD 303, 303A, 303B AND/OR 313 PER PLAN
22	RESET OR RELOCATE MAILBOX PER COUNTY STD 312 AND/OR 312(M)
23	ADJUST METER BOX/UTILITY BOX TO FINISHED GRADE
26	CONSTRUCT 6" TRAVERSABLE CURB AND GUTTER PER SPPWC STANDARD DETAIL 111(M), SEE SECTION ON SHEET 3
32	INSTALL ROADSIDE SIGN PER CA MUTCD 2014 FIGURE 2A-2(CA) AND COUNTY STANDARD 303A AD 303B

CR8A

WHITE ON RED
RED ON WHITE
18"X24"
LINE 1&4 – 3" SERIES C
LINES 2,3&5 – 2" SERIES D

PROPOSED SIGN DETAIL

MARK	CHANGES	RESIDENT ENGINEER	DATE
	NO CHANGES		

FIELD CHANGES

REGISTERED PROFESSIONAL ENGINEER CHRIS NGUYEN NO. C63582 CIVIL STATE OF CALIFORNIA

SAN BERNARDINO COUNTY
DEPARTMENT OF PUBLIC WORKS

DESIGNED BY:	DRAWN BY:	CHECKED BY:	RECOMMENDED BY:	
DC	DC	NM	CHRIS NGUYEN, P.E. ENGINEERING MANAGER	6/18/2024 DATE
NOEL MONDRAGON, P.E. SUPERVISING ENGINEER			APPROVED BY: MERVAT N. GHAFFAR, P.E. DEPUTY DIRECTOR	6/25/2024 DATE
06/18/2024 DATE				

NEWMARK ELEMENTARY SCHOOL SIDEWALKS

PLAN AND PROFILE F STREET
STA 47+00 TO STA 53+00
ARROWHEAD FARM AREA

J.L. REF.	W.O. NO.	PLAN SCALE	SHT. NO.	TOT. SHT'S.
JL12127	H15204	AS SHOWN	8	14

FILE NO. 342150–025, 361950–025
812600–010

FILE NO. 342150–025, 361950–025
812600–010

MARK	REVISIONS	APPR.	DATE

MARK	REVISIONS	APPR.	DATE

NOT FOR BID

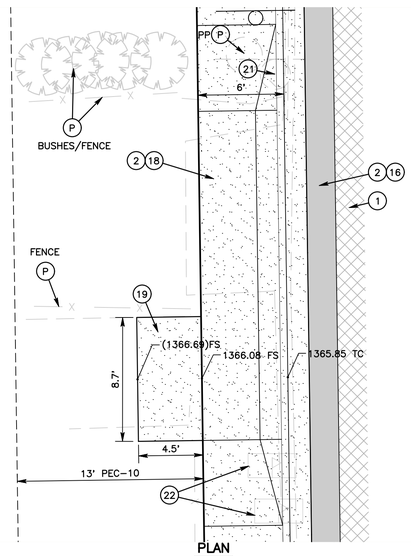

PLAN
SCALE: 1"=5'

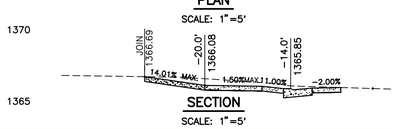

SECTION
SCALE: 1"=5'

DW-2
STA 31+49.86

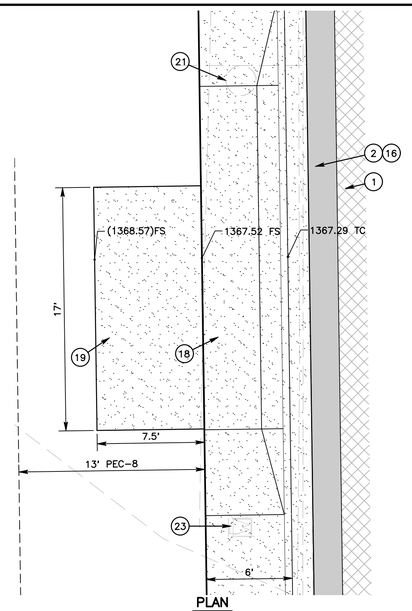

PLAN
SCALE: 1"=5'

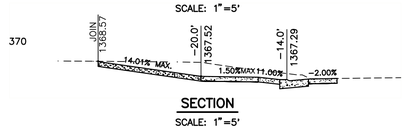

SECTION
SCALE: 1"=5'

DW-4
STA 33+09.65

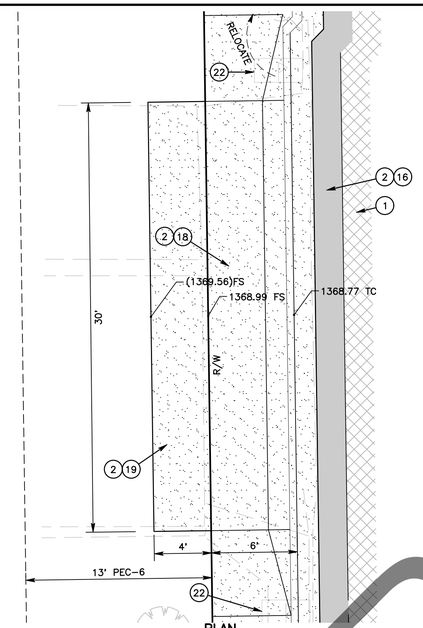

PLAN
SCALE: 1"=5'

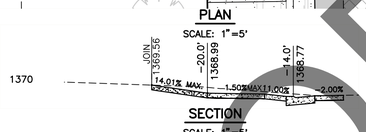

SECTION
SCALE: 1"=5'

DW-6
STA 35+11.94

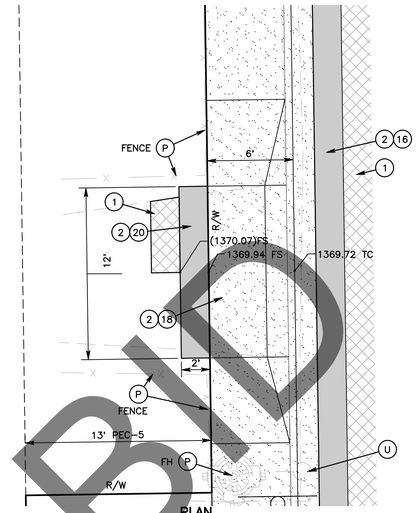

PLAN
SCALE: 1"=5'

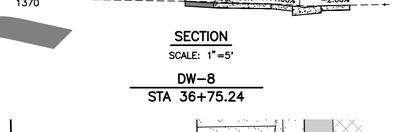

SECTION
SCALE: 1"=5'

DW-8
STA 36+75.24

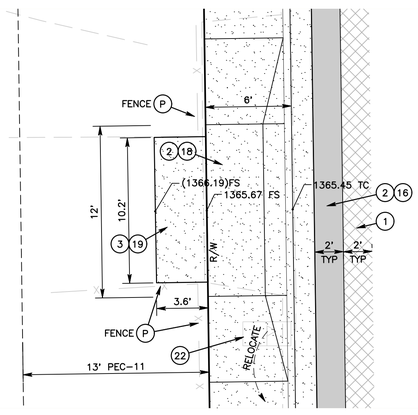

PLAN
SCALE: 1"=5'

SECTION
SCALE: 1"=5'

DW-1
STA 30+83.99

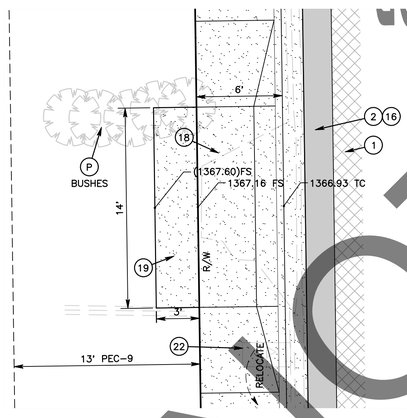

PLAN
SCALE: 1"=5'

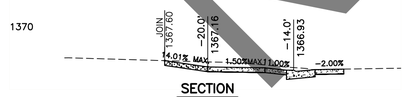

SECTION
SCALE: 1"=5'

DW-3
STA 32+50.36

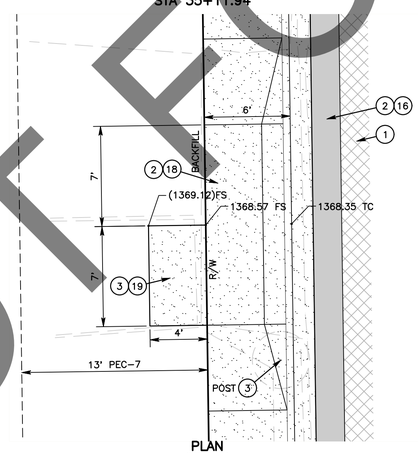

PLAN
SCALE: 1"=5'

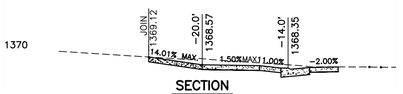

SECTION
SCALE: 1"=5'

DW-5
STA 34+47.08

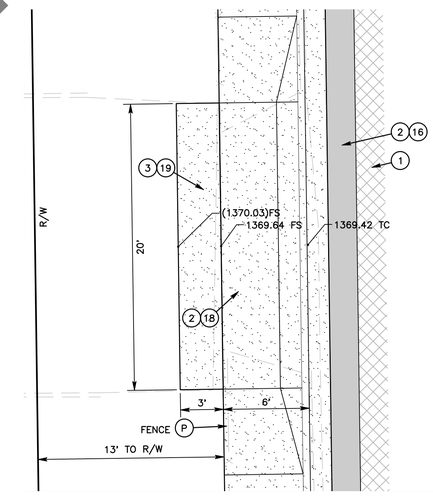

PLAN
SCALE: 1"=5'

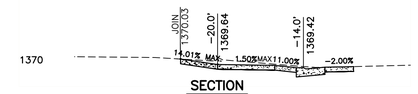

SECTION
SCALE: 1"=5'

DW-7
STA 36+36.13

N

FILE NO. 342150-025, 361950-025
812600-010

MARK	DATE	APPR.	REVISIONS

FILE NO. 342150-025, 361950-025
812600-010

MARK	DATE	APPR.	REVISIONS

CONSTRUCTION NOTES:

P	PROTECT IN PLACE
U	UTILITY VALVE COVER TO BE RELOCATED BY OTHERS
1	COLD PLANE (0.17' THK) EXISTING ASPHALT CONCRETE PAVEMENT AND PLACE (0.17' THK) ASPHALT CONCRETE OVERLAY PER TYPICAL SECTION AS SHOWN ON SHEET 3
2	SAWCUT AND REMOVE EXISTING ASPHALT CONCRETE SURFACING
3	SAWCUT AND REMOVE EXISTING CONCRETE SURFACING
16	PLACE ASPHALT CONCRETE OVER COMPACTED NATIVE SOIL PER TYPICAL SECTION AS SHOWN ON SHEET 3
18	CONSTRUCT CONCRETE DRIVEWAY APPROACH PER COUNTY STD 128A, SEE DRIVEWAY SECTION DETAILS THIS SHEET
19	CONSTRUCT (0.33' THICK) CONCRETE SURFACING
20	CONSTUCT (0.25' THICK) ASPHALT CONCRETE SURFACING
21	RESET ROAD SIGN PER COUNTY STD 303, 303A, 303B AND/OR 313 PER PLAN.
22	RESET OR RELOCATE MAILBOX PER COUNTY STD 312 AND/OR 312(M)
23	ADJUST METER BOX/UTILITY BOX TO FINISH GRADE

NOT FOR BID

MARK	CHANGES		
	NO CHANGES	RESIDENT ENGINEER	DATE

FIELD CHANGES

REGISTERED PROFESSIONAL ENGINEER
CHRIS NGUYEN
NO. C63582
CIVIL
STATE OF CALIFORNIA

SAN BERNARDINO COUNTY
DEPARTMENT OF PUBLIC WORKS

DESIGNED BY:	DRAWN BY:	CHECKED BY:	RECOMMENDED BY:
DC	DC	NM	CHRIS NGUYEN, P.E. ENGINEERING MANAGER — DATE 6/18/2024

NOEL MONDRAGON, P.E. SUPERVISING ENGINEER — DATE 06/18/2024

APPROVED BY: MERVAT N. KHALIL, P.E. DEPUTY DIRECTOR — DATE 6/25/2024

NEWMARK ELEMENTARY SCHOOL SIDEWALKS

DRIVEWAY DETAILS – 3RD AVENUE
DW-1 TO DW-8
ARROWHEAD FARM AREA

J.L. REF.	W.O. NO.	PLAN SCALE	SHT. NO.	TOT. SHT'S.
JL12127	H15204	AS SHOWN	9	14

	CONSTRUCTION NOTES:
P	PROTECT IN PLACE
1	COLD PLANE (0.17' THK) EXISTING ASPHALT CONCRETE PAVEMENT AND PLACE (017' THK) ASPHALT CONCRETE OVERLAY PER TYPICAL SECTION AS SHOWN ON SHEET 3
2	SAWCUT AND REMOVE EXISTING ASPHALT CONCRETE SURFACING
3	SAWCUT AND REMOVE EXISTING CONCRETE SURFACING
11	INSTALL 6" RETAINING CURB PER CALTRANS STD A88A
16	PLACE ASPHALT CONCRETE OVER COMPACTED NATIVE SOIL PER TYPICAL SECTION AS SHOWN ON SHEET 3
17	CONSTRUCT (0.33' THICK) CONCRETE SIDEWALK PER COUNTY STD 109(M) TYPE C
18	CONSTRUCT CONCRETE DRIVEWAY APPROACH PER COUNTY STD 128A, SEE DRIVEWAY SECTION DETAILS THIS SHEET
19	CONSTRUCT (0.33' THICK) CONCRETE SURFACING
20	CONSTRUCT (0.25' THICK) ASPHALT CONCRETE SURFACING
21	RESET ROAD SIGN PER COUNTY STD 303, 303A, 303B AND/OR 313 PER PLAN.
22	RESET OR RELOCATE MAILBOX PER COUNTY STD 312 AND/OR 312(M)
23	ADJUST METER BOX/UTILITY BOX TO FINISH GRADE
26	CONSTRUCT 6" TRAVERSABLE CURB AND GUTTER PER SPPWC STANDARD DETAIL 111(M), SEE SECTION ON SHEET 3

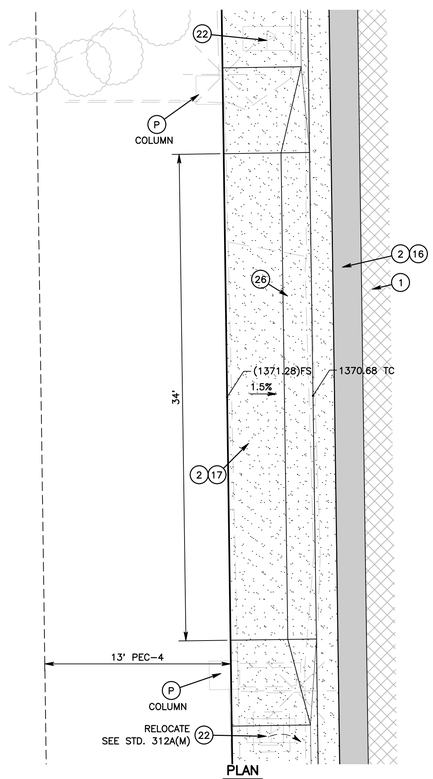

PLAN
SCALE: 1"=5'

DW-9
STA 38+02.06

DW-11
STA 38+83.57

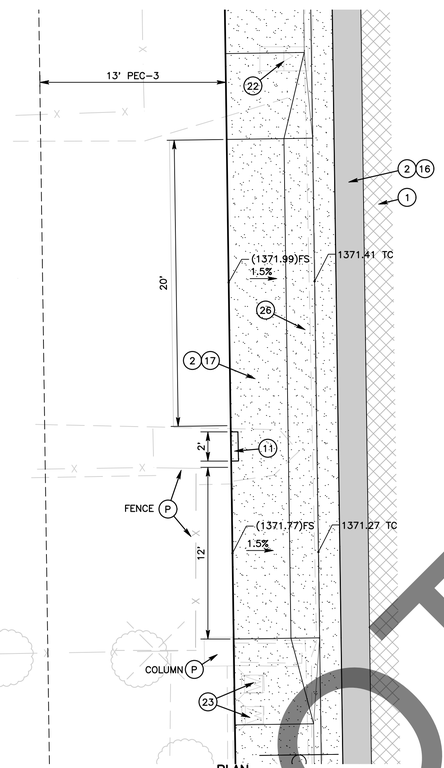

PLAN
SCALE: 1"=5'

DW-10
STA 38+64.65

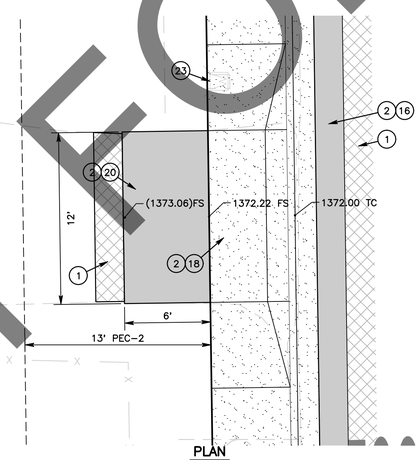

PLAN
SCALE: 1"=5'

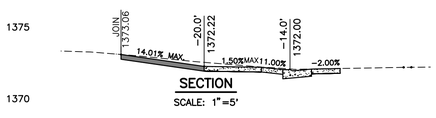

SECTION
SCALE: 1"=5'

DW-12
STA 39+49.25

DW-14
STA 40+48.73

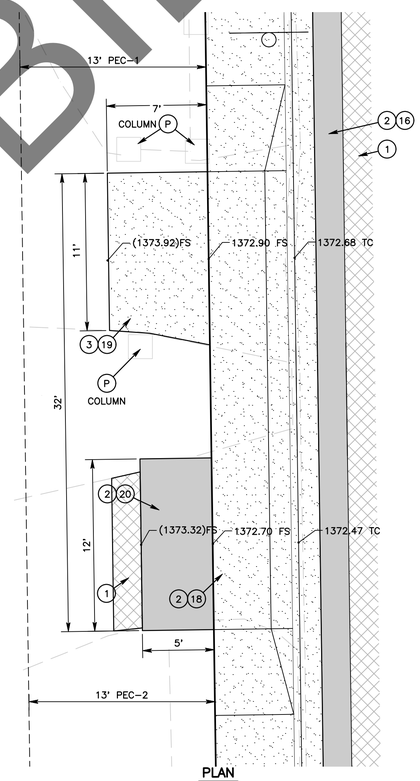

PLAN
SCALE: 1"=5'

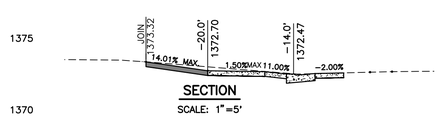

SECTION
SCALE: 1"=5'

DW-13
STA 40+28.83

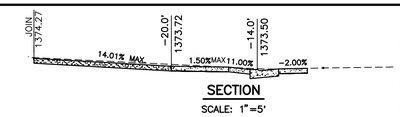

SECTION
SCALE: 1"=5'

DW-16
STA 41+41.42

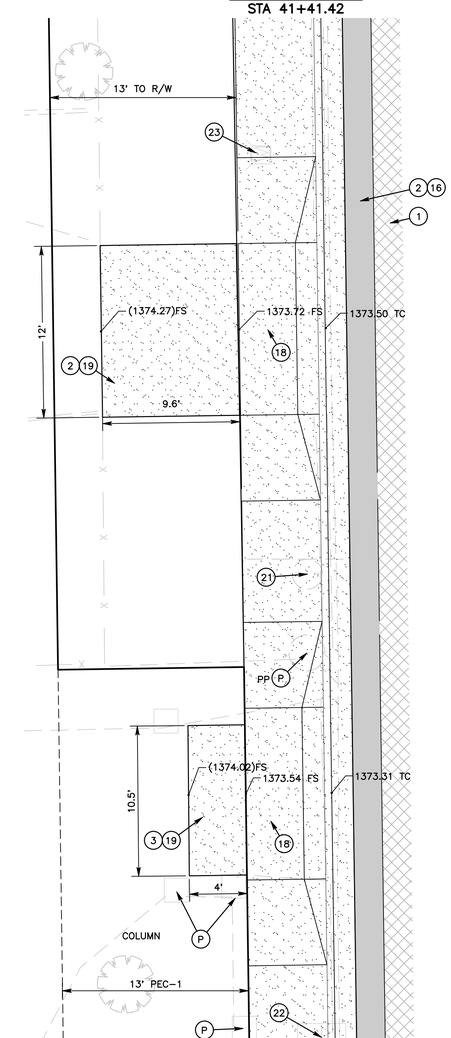

PLAN
SCALE: 1"=5'

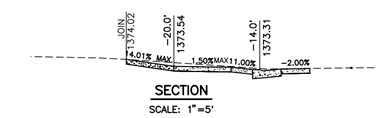

SECTION
SCALE: 1"=5'

DW-15
STA 41+08.94

NOT FOR BID

FILE NO. 342150-025, 361950-025
812600-010

MARK	REVISIONS	APPR.	DATE

FILE NO. 342150-025, 361950-025
812600-010

MARK	REVISIONS	APPR.	DATE

MARK	CHANGES		
	NO CHANGES	RESIDENT ENGINEER	DATE

FIELD CHANGES

REGISTERED PROFESSIONAL ENGINEER
CHRIS NGUYEN
NO. C63582
CIVIL
STATE OF CALIFORNIA

SAN BERNARDINO COUNTY
DEPARTMENT OF PUBLIC WORKS

DESIGNED BY:	DRAWN BY:	CHECKED BY:	RECOMMENDED BY:
DC	DC	NM	CHRIS NGUYEN, P.E. ENGINEERING MANAGER — DATE 6/18/2024

NOEL MONDRAGON, P.E.
SUPERVISING ENGINEER — DATE 06/18/2024

APPROVED BY:
MERVAT KILBAIL, P.E.
DEPUTY DIRECTOR — DATE 6/25/2024

NEWMARK ELEMENTARY SCHOOL SIDEWALKS

DRIVEWAY DETAILS – 3RD AVENUE
DW-9 TO DW-16
ARROWHEAD FARM AREA

J.L. REF.	W.O. NO.	PLAN SCALE	SHT. NO.	TOT. SHT'S.
JL12127	H15204	AS SHOWN	10	14

	CONSTRUCTION NOTES:
P	PROTECT IN PLACE
1	COLD PLANE (0.17' THK) EXISTING ASPHALT CONCRETE PAVEMENT AND PLACE (017' THK) ASPHALT CONCRETE OVERLAY PER TYPICAL SECTION AS SHOWN ON SHEET 3
2	SAWCUT AND REMOVE EXISTING ASPHALT CONCRETE SURFACING
3	SAWCUT AND REMOVE EXISTING CONCRETE SURFACING
9	REMOVE AND DISPOSE OF LARGE ROCKS.
16	PLACE ASPHALT CONCRETE OVER COMPACTED NATIVE SOIL PER TYPICAL SECTION AS SHOWN ON SHEET 3
17	CONSTRUCT (0.33' THICK) CONCRETE SIDEWALK PER COUNTY STD 109(M) TYPE C
18	CONSTRUCT CONCRETE DRIVEWAY APPROACH PER COUNTY STD 128A, SEE DRIVEWAY SECTION DETAILS THIS SHEET
19	CONSTRUCT (0.33' THICK) CONCRETE SURFACING
22	RESET OR RELOCATE MAILBOX PER COUNTY STD 312 AND/OR 312(M)
26	CONSTRUCT 6" TRAVERSABLE CURB AND GUTTER PER SPPWC STANDARD DETAIL 111(M), SEE SECTION ON SHEET 3

FILE NO. 342150-025, 361950-025
812600-010

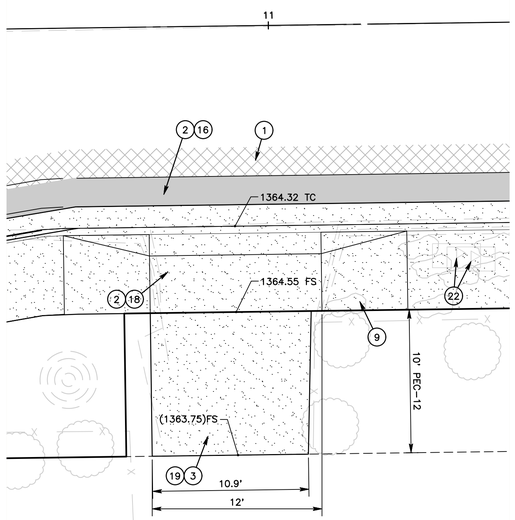

PLAN
SCALE: 1"=5'

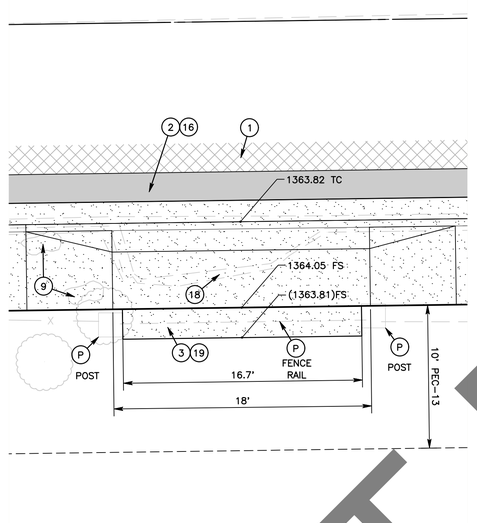

PLAN
SCALE: 1"=5'

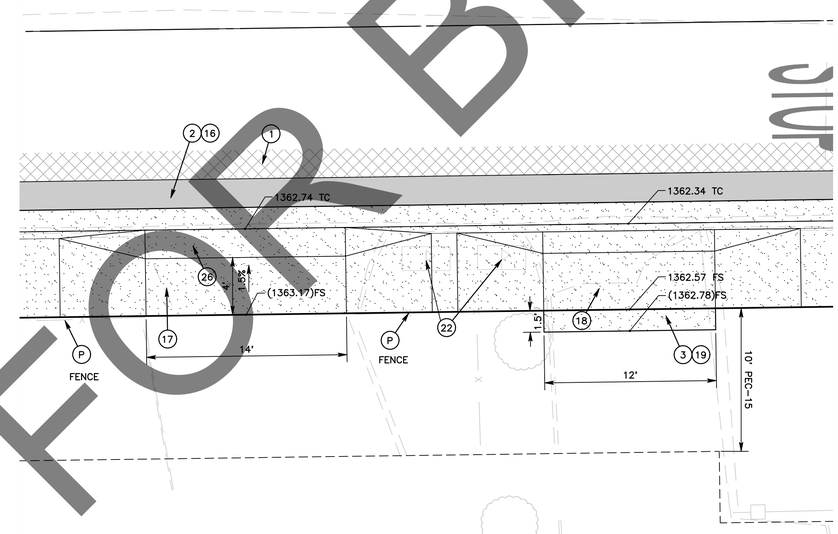

PLAN
SCALE: 1"=5'

DW-19
STA 12+47.08

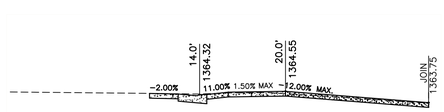

SECTION
SCALE: 1"=5'

DW-17
STA 10+97.48

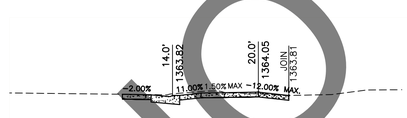

SECTION
SCALE: 1"=5'

DW-18
STA 11+52.14

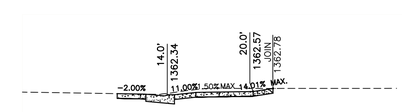

SECTION
SCALE: 1"=5'

DW-20
STA 12+73.87

NOT FOR BID

FILE NO. 342150-025, 361950-025
812600-010

MARK	DATE	APPR.	REVISIONS

MARK	DATE	APPR.	REVISIONS

MARK	CHANGES		DATE
	NO CHANGES	RESIDENT ENGINEER	

FIELD CHANGES

REGISTERED PROFESSIONAL ENGINEER CHRIS NGUYEN NO. C63582 CIVIL STATE OF CALIFORNIA

SAN BERNARDINO COUNTY
DEPARTMENT OF PUBLIC WORKS

DESIGNED BY:	DRAWN BY:	CHECKED BY:	RECOMMENDED BY:
DC	DC	NM	CHRIS NGUYEN, P.E. ENGINEERING MANAGER — DATE 6/18/2024
NOEL MONDRAGON, P.E. SUPERVISING ENGINEER — DATE 06/18/2024			APPROVED BY: MERVAT N. GHABRIAL, P.E. DEPUTY DIRECTOR — DATE 6/25/2024

NEWMARK ELEMENTARY
SCHOOL SIDEWALKS
DRIVEWAY DETAILS – 41ST STREET
DW-17 TO DW-20
ARROWHEAD FARM AREA

J.L. REF.	W.O. NO.	PLAN SCALE	SHT. NO.	TOT. SHT'S.
JL12127	H15204	AS SHOWN	11	14

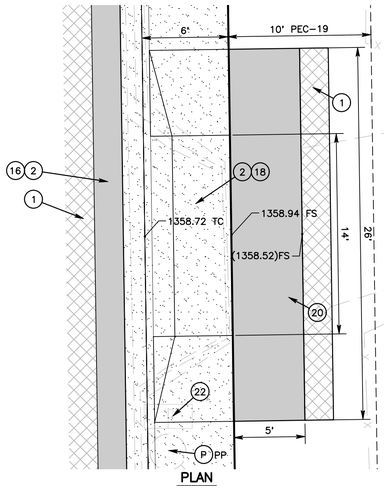

PLAN
SCALE: 1"=5'

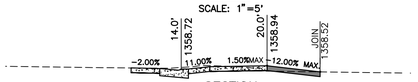

SECTION
SCALE: 1"=5'

DW-22
STA 41+65.36

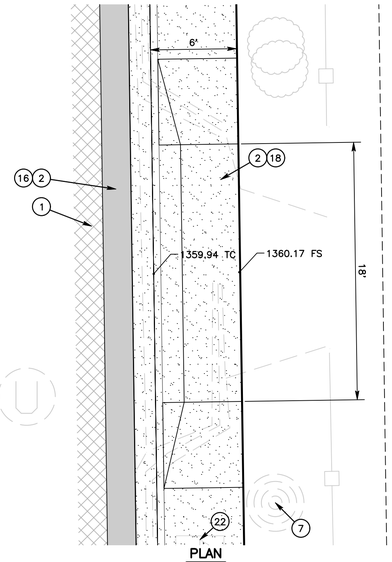

PLAN
SCALE: 1"=5'

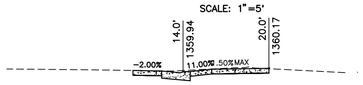

SECTION
SCALE: 1"=5'

DW-24
STA 43+10.01

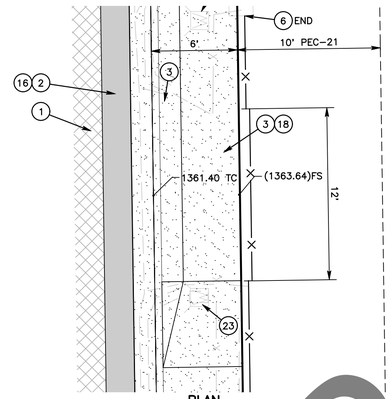

PLAN
SCALE: 1"=5'

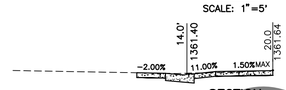

SECTION
SCALE: 1"=5'

DW-26
STA 44+55.68

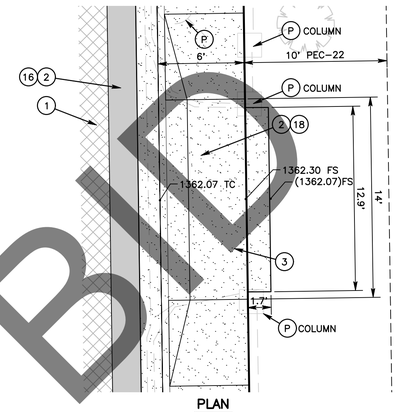

PLAN
SCALE: 1"=5'

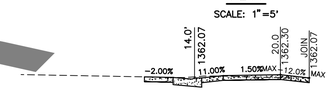

SECTION
SCALE: 1"=5'

DW-28
STA 45+21.50

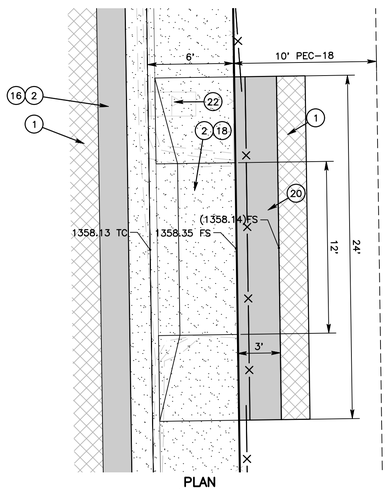

PLAN
SCALE: 1"=5'

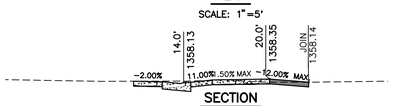

SECTION
SCALE: 1"=5'

DW-21
STA 40+77.66

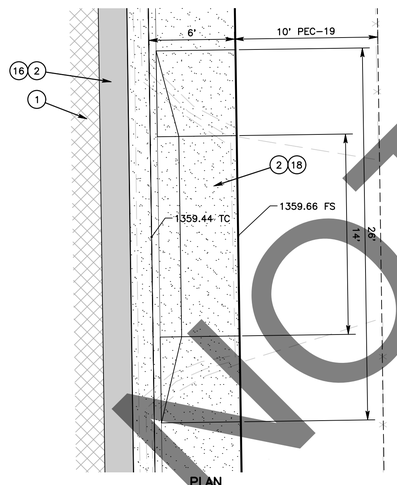

PLAN
SCALE: 1"=5'

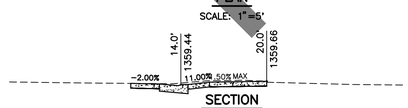

SECTION
SCALE: 1"=5'

DW-23
STA 42+57.63

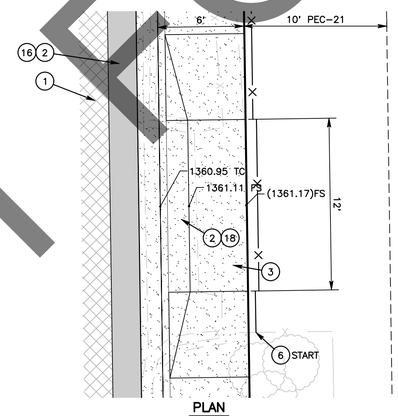

PLAN
SCALE: 1"=5'

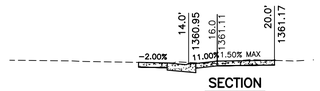

SECTION
SCALE: 1"=5'

DW-25
STA 44+12.88

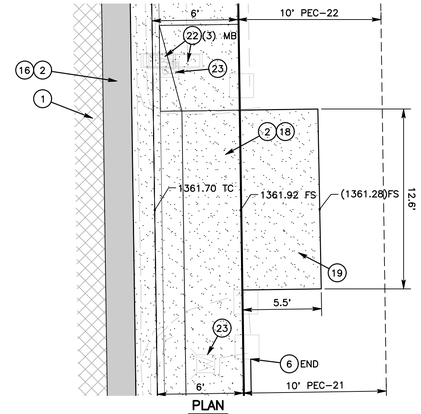

PLAN
SCALE: 1"=5'

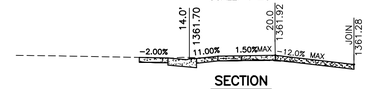

SECTION
SCALE: 1"=5'

DW-27
STA 44+78.58

	CONSTRUCTION NOTES:
P	PROTECT IN PLACE
1	COLD PLANE (0.17' THK) EXISTING ASPHALT CONCRETE PAVEMENT AND PLACE (017' THK) ASPHALT CONCRETE OVERLAY PER TYPICAL SECTION AS SHOWN ON SHEET 3
2	SAWCUT AND REMOVE EXISTING ASPHALT CONCRETE SURFACING
3	SAWCUT AND REMOVE EXISTING CONCRETE SURFACING
6	REMOVE AND REPLACE IN KIND 4' HIGH CHAINLINK FENCE PER COUNTY STD 300
7	REMOVE AND DISPOSE OF TREE OR STUMP, SEE SPECIAL PROVISIONS
16	PLACE ASPHALT CONCRETE OVER COMPACTED NATIVE SOIL PER TYPICAL SECTION AS SHOWN ON SHEET 3
18	CONSTRUCT CONCRETE DRIVEWAY APPROACH PER COUNTY STD 128A, SEE DRIVEWAY SECTION DETAILS THIS SHEET
19	CONSTRUCT (0.33' THICK) CONCRETE SURFACING
20	CONSTRUCT (0.25' THICK) ASPHALT CONCRETE SURFACING
22	RESET OR RELOCATE MAILBOX PER COUNTY STD 312 AND/OR 312(M)
23	ADJUST METER BOX/UTILITY BOX TO FINISH GRADE

NOT FOR BID

FILE NO. 342150-025, 361950-025
812600-010

FILE NO. 342150-025, 361950-025
812600-010

MARK	REVISIONS	APPR.	DATE

MARK	REVISIONS	APPR.	DATE

MARK	CHANGES		DATE
	NO CHANGES	RESIDENT ENGINEER	

FIELD CHANGES

REGISTERED PROFESSIONAL ENGINEER
CHRIS NGUYEN
NO. C63582
CIVIL
STATE OF CALIFORNIA

SAN BERNARDINO COUNTY
DEPARTMENT OF PUBLIC WORKS

DESIGNED BY:	DRAWN BY:	CHECKED BY:	RECOMMENDED BY:	
DC	DC	NM	CHRIS NGUYEN, P.E. ENGINEERING MANAGER	6/18/2024 DATE
NOEL MONDRAGON, P.E. SUPERVISING ENGINEER			APPROVED BY: MERVAT N. SHAHAIL, P.E. DEPUTY DIRECTOR	6/25/2024 DATE
06/18/2024 DATE				

NEWMARK ELEMENTARY
SCHOOL SIDEWALKS
DRIVEWAY DETAILS – F STREET
DW-21 TO DW-28
ARROWHEAD FARM AREA

J.L. REF.	W.O. NO.	PLAN SCALE	SHT. NO.	TOT. SHT'S.
JL12127	H15204	AS SHOWN	12	14

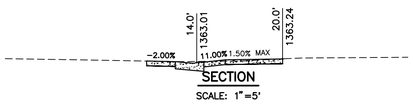

SECTION
SCALE: 1"=5'

DW-30
STA 46+05.55

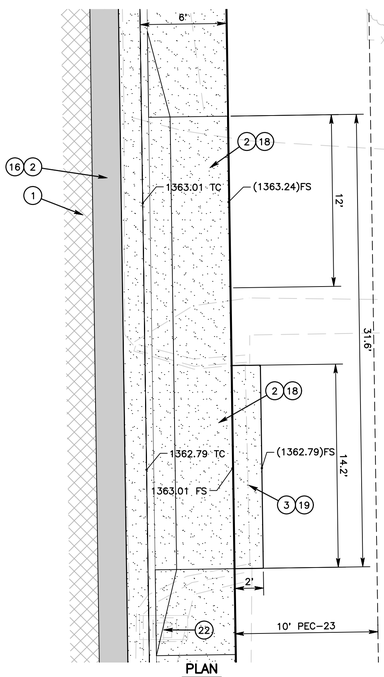

PLAN
SCALE: 1"=5'

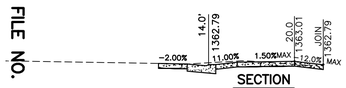

SECTION
SCALE: 1"=5'

DW-29
STA 45+86.92

DW-32
STA 46+68.14

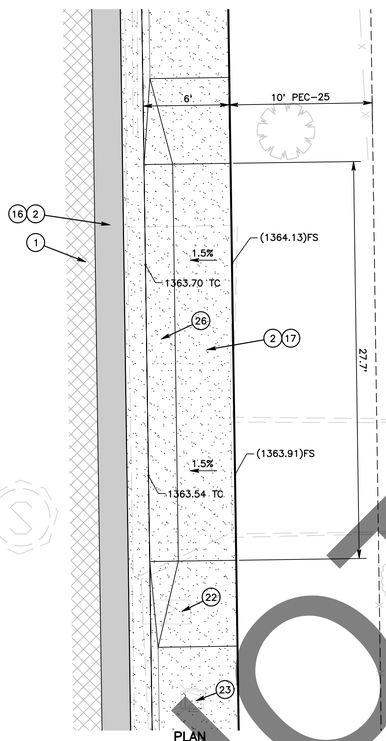

PLAN
SCALE: 1"=5'

DW-31
STA 46+53.40

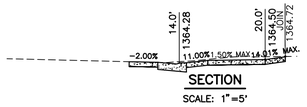

SECTION
SCALE: 1"=5'

DW-34
STA 48+01.32

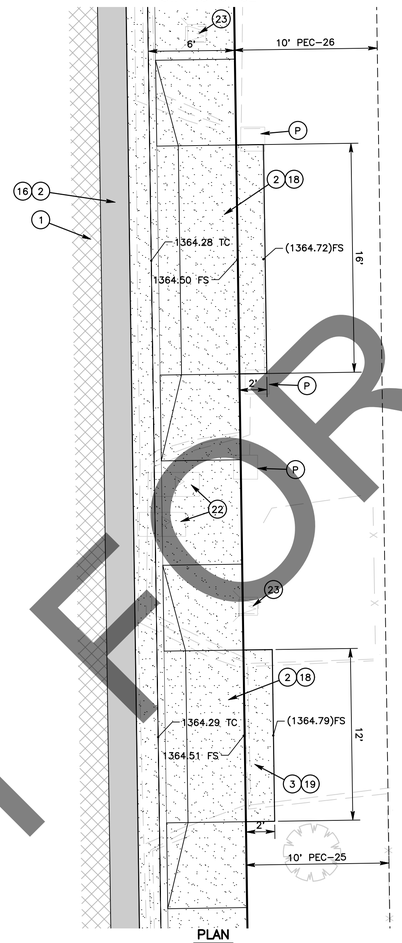

PLAN
SCALE: 1"=5'

SECTION
SCALE: 1"=5'

DW-33
STA 47+68.02

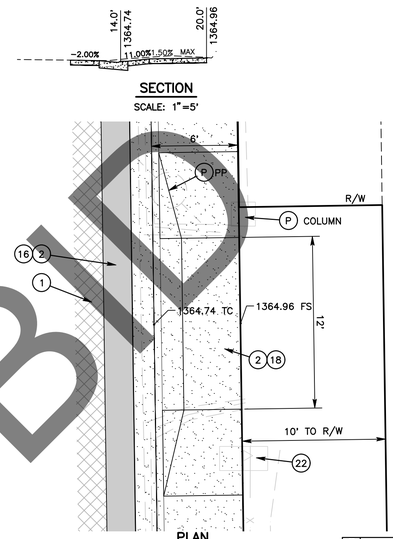

SECTION
SCALE: 1"=5'

PLAN
SCALE: 1"=5'

DW-36
STA 49+04.86

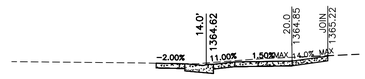

SECTION
SCALE: 1"=5'

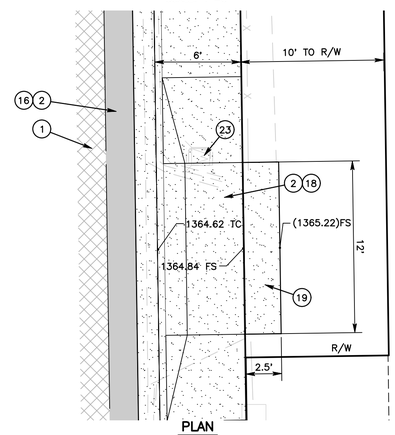

PLAN
SCALE: 1"=5'

DW-35
STA 48+57.61

○	CONSTRUCTION NOTES:
P	PROTECT IN PLACE
1	COLD PLANE (0.17' THK) EXISTING ASPHALT CONCRETE PAVEMENT AND PLACE (017' THK) ASPHALT CONCRETE OVERLAY PER TYPICAL SECTION AS SHOWN ON SHEET 3
2	SAWCUT AND REMOVE EXISTING ASPHALT CONCRETE SURFACING
3	SAWCUT AND REMOVE EXISTING CONCRETE/BRICK SURFACING
16	PLACE ASPHALT CONCRETE OVER COMPACTED NATIVE SOIL PER TYPICAL SECTION AS SHOWN ON SHEET 3
17	CONSTRUCT (0.33' THICK) CONCRETE SIDEWALK PER COUNTY STD 109(M) TYPE C
18	CONSTRUCT CONCRETE DRIVEWAY APPROACH PER COUNTY STD 128A, SEE DRIVEWAY SECTION DETAILS THIS SHEET
19	CONSTRUCT (0.33' THICK) CONCRETE SURFACING
22	RESET OR RELOCATE MAILBOX PER COUNTY STD 312 AND/OR 312(M)
23	ADJUST METER BOX/UTILITY BOX TO FINISH GRADE
26	CONSTRUCT 6" TRAVERSABLE CURB AND GUTTER PER SPPWC STANDARD DETAIL 111(M), SEE SECTION ON SHEET 3

NOT FOR BID

FILE NO. 342150-025, 361950-025
812600-010

MARK	REVISIONS	APPR.	DATE

FILE NO. 342150-025, 361950-025
812600-010

MARK	REVISIONS	APPR.	DATE

N

MARK	CHANGES		DATE
	NO CHANGES	RESIDENT ENGINEER	

FIELD CHANGES

REGISTERED PROFESSIONAL ENGINEER
CHRIS NGUYEN
NO. C63582
CIVIL
STATE OF CALIFORNIA

SAN BERNARDINO COUNTY
DEPARTMENT OF PUBLIC WORKS

DESIGNED BY:	DRAWN BY:	CHECKED BY:	RECOMMENDED BY:	
DC	DC	NM	CHRIS NGUYEN, P.E. ENGINEERING MANAGER	6/18/2024 DATE

		APPROVED BY:	
NOEL MONDRAGON, P.E. SUPERVISING ENGINEER	06/18/2024 DATE	BEHROOZ N. MOGHADDAM, P.E. DEPUTY DIRECTOR	6/25/2024 DATE

NEWMARK ELEMENTARY
SCHOOL SIDEWALKS
DRIVEWAY DETAILS – F STREET
DW-29 TO DW-36
ARROWHEAD FARM AREA

J.L. REF.	W.O. NO.	PLAN SCALE	SHT. NO.	TOT. SHT'S.
JL12127	H15204	AS SHOWN	13	14

SECTION
SCALE: 1"=5'

DW-38
STA 49+80.79

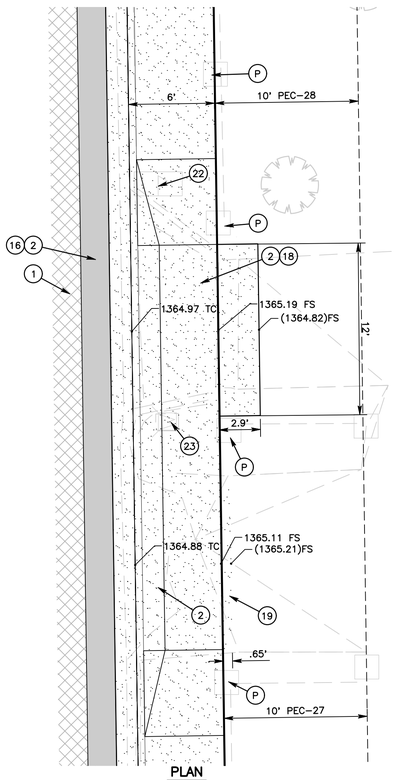

PLAN
SCALE: 1"=5'

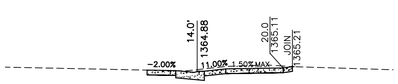

SECTION
SCALE: 1"=5'

DW-37
STA 49+64.47

DW-40
STA 50+49.83

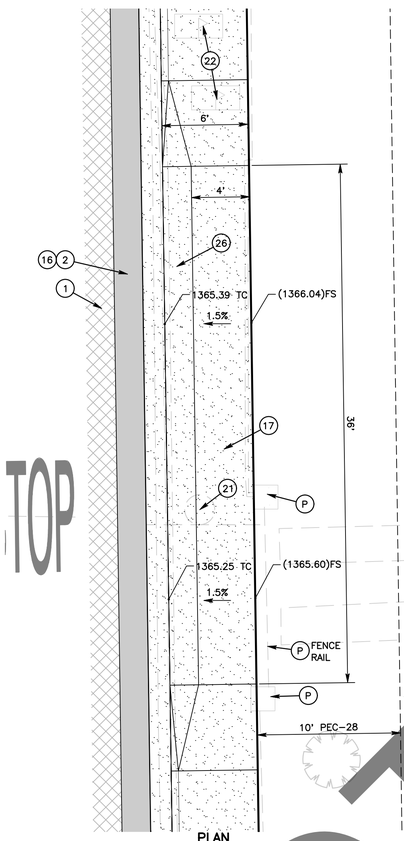

PLAN
SCALE: 1"=5'

DW-39
STA 50+30.60

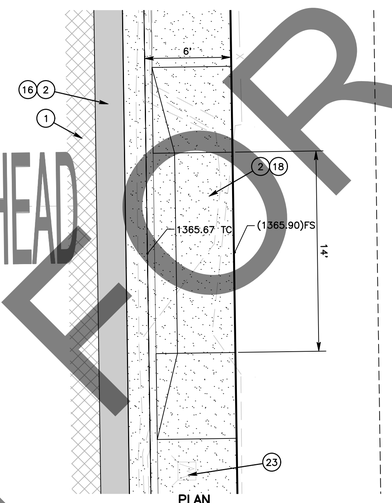

PLAN
SCALE: 1"=5'

SECTION
SCALE: 1"=5'

DW-41
STA 50+91.74

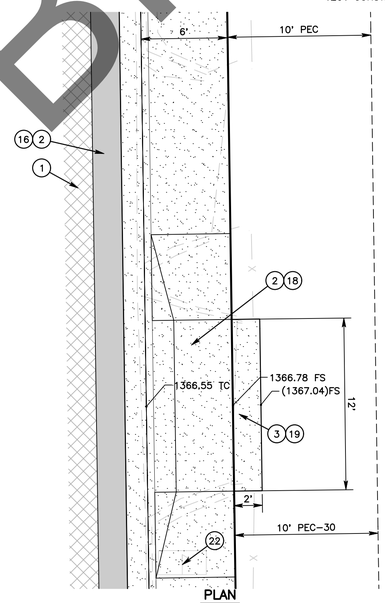

PLAN
SCALE: 1"=5'

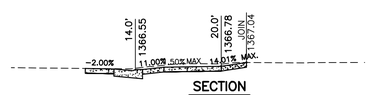

SECTION
SCALE: 1"=5'

DW-42
STA 51+53.19

	CONSTRUCTION NOTES:
P	PROTECT IN PLACE
1	COLD PLANE (0.17' THK) EXISTING ASPHALT CONCRETE PAVEMENT AND PLACE (017' THK) ASPHALT CONCRETE OVERLAY PER TYPICAL SECTION AS SHOWN ON SHEET 3
2	SAWCUT AND REMOVE EXISTING ASPHALT CONCRETE SURFACING
3	SAWCUT AND REMOVE EXISTING CONCRETE/BRICK SURFACING
16	PLACE ASPHALT CONCRETE OVER COMPACTED NATIVE SOIL PER TYPICAL SECTION AS SHOWN ON SHEET 3
17	CONSTRUCT CONCRETE (0.33' THICK) CONCRETE SIDEWALK PER COUNTY STD 109(M) TYPE C
18	CONSTRUCT CONCRETE DRIVEWAY APPROACH PER COUNTY STD 128A, SEE DRIVEWAY SECTION DETAILS THIS SHEET
19	CONSTRUCT (0.33' THICK) CONCRETE SURFACING
21	RESET OR RELOCATE ROAD SIGN PER COUNTY STD 303, 303A, AND/OR 313 PER PLAN
22	RESET OR RELOCATE MAILBOX PER COUNTY STD 312 AND/OR 312(M)
23	ADJUST METER BOX/UTILITY BOX TO FINISH GRADE
26	CONSTRUCT 6" TRAVERSABLE CURB AND GUTTER PER SPPWC STANDARD DETAIL 111(M), SEE SECTION ON SHEET 3

FILE NO. 342150-025, 361950-025
812600-010

NOT FOR BID

MARK	REVISIONS	APPR.	DATE

MARK	REVISIONS	APPR.	DATE

FILE NO. 342150-025, 361950-025
812600-010

MARK	CHANGES		
	NO CHANGES	RESIDENT ENGINEER	DATE

FIELD CHANGES

REGISTERED PROFESSIONAL ENGINEER CHRIS NGUYEN NO. C63582 CIVIL STATE OF CALIFORNIA

SAN BERNARDINO COUNTY
DEPARTMENT OF PUBLIC WORKS

DESIGNED BY:	DRAWN BY:	CHECKED BY:	RECOMMENDED BY:
DC	DC	NM	CHRIS NGUYEN, P.E. ENGINEERING MANAGER — DATE 6/18/2024

NOEL MONDRAGON, P.E. SUPERVISING ENGINEER — DATE 06/18/2024

APPROVED BY: EMERVAT NOURMOHAIL, P.E. DEPUTY DIRECTOR — DATE 6/25/2024

NEWMARK ELEMENTARY SCHOOL SIDEWALKS
DRIVEWAY DETAILS – F STREET
DW-37 TO DW-42
ARROWHEAD FARM AREA

J.L. REF.	W.O. NO.	PLAN SCALE	SHT. NO.	TOT. SHT'S.
JL12127	H15204	AS SHOWN	14	14