THIS DRAWING IS 30" X 42" AT FULL SIZE, 15" X 21" AT HALF SIZE. © 2015 BY SALAS O'BRIEN ENGINEERS, INC.

SAN BERNARDINO COUNTY

800MHZ UPGRADES - CAJON PASS TOWER

County Project #10.10.1011

NOT FOR BID

VICINITY MAP

SITE PLAN

SCALE: N.T.S.

AREA OF WORK

METAL ROOF

1. METAL ROOF TO BE DESIGNED FOR 20 LBS/SQ.FT. SNOW LOAD.
2. METAL ROOF TO BE DESIGNED FOR 110 MPH BASIC WIND SPEED.
3. FIRE RATING UL CLASS A
4. UPLIFT: FM 4471, UL 580, UL 1897 ASTM E1592.

GENERAL NOTES

1. ALL WORK , MATERIALS AND METHODS USED SHALL CONFORM TO MEP COMPONENT ANCHORAGE NOTE.
2. ALL WORK SHALL CONFORM WITH ALL APPLICABLE LOCAL, STATE, AND NATIONAL CODES.
3. PIPE HANGERS AND SUPPORTS SHALL BE SUPERSTRUT OR EQUAL INCLUDING CHANNEL, HANGERS, STRAPS, ISOLATORS, INSULATION, SHAW PIPE SHIELDS, INC., PORTABLE PIPE HANGERS, INC.
4. PATCH EXISTING AND NEW OPENINGS SO FINISH PROFILES, FIXTURES, ETC. MATCH ADJACENT UNDISTURBED WORK.
5. ALL DIMENSIONS ARE APPROXIMATE. THE DRAWINGS ARE DIAGRAMMATIC TO THE EXTENT THAT ALL FITTINGS, OFFSETS, ETC. ARE NOT SHOWN. THESE DRAWINGS ARE FOR THE GUIDANCE OF THE CONTRACTOR. CONTRACTOR SHALL VERIFY ALL DIMENSIONS IN THE FIELD FOR FABRICATION OF THE PIPING, PENETRATIONS, CONDUIT, WIRING, AND ALL COMPONENTS INTO A COMPLETE AND OPERABLE SYSTEM.
6. ALL WORK MUST BE SCHEDULED WITH THE PROJECT MANAGER TO MINIMIZE DISTURBANCE OF NORMAL ACTIVITIES. COORDINATE WORK WITH PROJECT MANAGER.
7. WHERE DISCREPANCIES OCCUR BETWEEN THE PLANS AND SPECIFICATIONS CONTRACTOR SHALL NOTIFY OWNER OF ANY DISCREPANCIES IN WRITING. ANY ADJUSTMENT OF THE CONTRACT DOCUMENTS WITHOUT A DETERMINATION BY THE OWNER SHALL BE AT THE CONTRACTOR'S OWN RISK AND EXPENSE. THE MOST STRINGENT REQUIREMENTS SHALL APPLY AS DETERMINED BY THE OWNER.
8. CONTRACTOR SHALL PERFORM ALL WORK IN ACCORDANCE WITH MANUFACTURERS RECOMMENDATIONS.
9. THE INTENT OF THESE DRAWINGS AND SPECIFICATIONS IS THAT THE WORK OF THE ALTERATION, REHABILITATION OR RECONSTRUCTION IS TO BE IN ACCORDANCE WITH TITLE 24, CALIFORNIA CODE OF REGULATIONS. SHOULD ANY EXISTING CONDITIONS SUCH AS DETERIORATION OR NONCOMPLYING CONSTRUCTION BE DISCOVERED WHICH IS NOT COVERED IN THE CONTRACT DOCUMENTS WHEREIN THE FINISHED WORK WILL NOT COMPLY WITH TITLE 24, CALIFORNIA CODE OF REGULATIONS, A CONSTRUCTION CHANGE DOCUMENT, OR A SEPARATE SET OF PLANS AND SPECIFICATIONS, DETAILING AND SPECIFYING THE REQUIRED WORK SHALL BE SUBMITTED TO AND APPROVED BY THE ENGINEER AND DSA BEFORE PROCEEDING WITH THE WORK.
10. PRIOR TO SUBMITTING PROPOSAL, BIDDER SHALL EXAMINE ALL GENERAL CONSTRUCTION DRAWINGS AND SHALL HAVE HAD VISITED THE CONSTRUCTION SITE. HE SHALL BE FAMILIAR WITH THE EXISTING CONDITIONS UNDER WHICH HE WILL HAVE TO OPERATE AND WHICH WILL IN ANY WAY AFFECT THE WORK UNDER THIS CONTRACT. NO SUBSEQUENT ALLOWANCE WILL BE MADE IN THIS CONNECTION IN BEHALF OF THE CONTRACTOR FOR ANY ERROR OR NEGLIGENCE ON HIS PART.
11. THE CONTRACTOR SHALL BE HELD FULLY RESPONSIBLE FOR THE PROPER RESTORATION OF ALL EXISTING SURFACES REQUIRING PATCHING, PLASTERING, PAINTING AND/OR OTHER REPAIR DUE TO THE INSTALLATION OF WORK UNDER THE TERMS OF THIS SPECIFICATION. CLOSE ALL OPENINGS, REPAIR ALL SURFACES, ETC., AS REQUIRED.
12. ALL TEMPORARY AND REMODELING WORK SHALL BE CONSIDERED A PART OF THIS CONTRACT AND NO EXTRA CHARGES WILL BE ALLOWED. THIS SHALL INCLUDE MINOR ITEMS OF MATERIAL OR EQUIPMENT NECESSARY TO MEET THE REQUIREMENTS AND INTENT OF THE PROJECT.
13. EXAMINE MECHANICAL & STRUCTURAL DRAWINGS AND SPECIFICATIONS TO DETERMINE THE SEQUENCE OF CONSTRUCTION THROUGHOUT THE PROJECT, INCLUDING EXISTING, TEMPORARY, REMODELED AND NEW AREAS.
14. ALL DEVICES & EQUIPMENT ARE NEW, UNLESS OTHERWISE NOTED.
15. CONTRACTOR SHALL PROPERLY DISPOSE OF OR RECYCLE DEMOLISHED MATERIALS.
16. MAINTAIN FIRE RATING OF ALL ASSEMBLIES PENETRATED.
17. SEAL ALL EXTERIOR PENETRATIONS WATER-TIGHT.

SUMMARY OF WORK

1. MONOPOLE TOWER FIFTY FEET TALL.
2. TELECOM BUILDING WITH METAL STANDING SEAM ROOF. BUILDING SHALL INCLUDE TWO BARD HVAC UNITS.
3. CUSTOMIZED STAINLESS STEEL LOCKABLE CAGE TO CONTAIN BOTH EXTERIOR BARD UNITS. ELECTRICAL DISCONNECT SWITCHES SHALL BE INSTALLED OUTSIDE OF CAGE.
4. DIESEL GENERATOR WITH BELLY TANK AND AUTOMATIC TRANSFER SWITCH.
5. RETAINING WALL BETWEEN THE TELECOM BUILDING AND THE MONOPOLE TOWER.
6. CUSTOMIZED CABLES COVER WITH CABLE LADDER UNDERNEATH. FURNISH AND INSTALL BETWEEN RETAINING WALL AND BUILDING EXTERIOR WALL. DRY WELL SHALL BE PROVIDED UNDER THE CABLE LADDER WITH COVER FOR DRAINAGE.
7. NEW ROOF TO BE BY McELROY METAL STANDING SEAM METAL ROOF (SSMRS)-MECHANICAL SEAM PANEL #238T SYMMETRICAL 16" PLANK WITH PENCIL RIBS IN 24 GAUGE WITH 22 GAUGE CLIPS AS REQUIRED BY MANUFACTURE.
8. FURNISH AND INSTALL GROUNDING SYSTEM PER PLAN.
9. FURNISH AND INSTALL GRADING/CONCRETE PADS/GRAVEL SURFACES PER CIVIL PLAN. WATER SHALL BE GUIDED AWAY FROM BUILDING.

*SEE REST OF SCOPE OF WORK FROM CONSTRUCTION DOCUMENTS.

PROJECT DATA

BUILDINGS:	BUILDING 'B'
OCCUPANCY:	S
CONSTRUCTION TYPE:	V-B
SPRINKLER:	NO
AREA -	264 SF

PROJECT TEAM

ARCHITECTURAL/ MECHANICAL ELECTRICAL/ PLUMBING

SALAS O'BRIEN
3700 S. SUSAN STREET, STE 150
SANTA ANA, CALIFORNIA 92704
TEL (949) 517-4900
FAX (408) 297-2995

CIVIL ENGINEER & SURVEY

BRANDOW & JOHNSTON
700 S. FLOWER ST #1800
LOS ANGELES, CALIFORNIA 90017
TEL (213) 596-4500
FAX (213) 596-4599

STRUCTURAL ENGINEER

COMPLETE PROJECT SOLUTIONS
3313 VINCENT RD, STE 104
PLEASANT HILL, CALIFORNIA 94523
TEL (925) 265-2229

GEOTECHNICAL ENGINEER

BSK ASSOCIATES
700 22ND ST
BAKERSFIELD, CALIFORNIA 93301
TEL (661) 327-0671
FAX (661) 324-4218

APPLICABLE CODES

UNLESS OTHERWISE INDICATED OR SPECIFIED, PERFORM THE WORK IN CONFORMANCE WITH THE LATEST EDITIONS OF ALL APPLICABLE REGULATORY REQUIREMENTS, INCLUDING, BUT NOT LIMITED TO, THE FOLLOWING:

1. CALIFORNIA BUILDING STANDARDS ADMINISTRATIVE CODE (PART 1, TITLE 24): 2019
2. CALIFORNIA BUILDING CODE (PART 2, TITLE 24): 2018 IBC WITH 2019 CA AMENDMENTS
3. CALIFORNIA ELECTRICAL CODE (PART 3, TITLE 24): 2017 NEC WITH 2019 CA AMENDMENTS
4. CALIFORNIA MECHANICAL CODE (PART 4, TITLE 24): 2018 UMC WITH 2019 CA AMENDMENTS
5. CALIFORNIA PLUMBING CODE (PART 5, TITLE 24) 2018 UPC WITH 2019 CA AMENDMENTS
6. CALIFORNIA ENERGY CODE (PART 6, TITLE 24): 2019
7. CALIFORNIA HISTORICAL BUILDING CODE, (PART 8, TITLE 24): 2019
8. CALIFORNIA FIRE CODE (PART 9, TITLE 24): 2018 IFC WITH 2019 CA AMENDMENTS
9. CALIFORNIA EXISTING BUILDING CODE (PART 10, TITLE 24): 2019 (2018 INTERNATIONAL EXISTING BUILDING CODE WITH 2019 CA AMENDMENTS)
10. CALIFORNIA GREEN BUILDING STANDARDS CODE OR CAL GREEN (PART 11, TITLE 24): 2019
11. CALIFORNIA REFERENCED STANDARDS CODE (PART 12, TITLE 24): 2019
12. PUBLIC SAFETY (CCR TITLE 19), STATE FIRE MARSHAL: CURRENT REVISION
13. NFPA 72, NATIONAL FIRE ALARM CODE, 2016 EDITION

DRAWING INDEX

SHEET NO.	DESCRIPTION
G-0.0	COVER SHEET
A-1.1	ARCHITECTURAL SITE PLAN
A-3.1	ARCHITECTURAL ELEVATIONS
A-4.1	ARCHITECTURAL ENLARGED PLAN & ROOF PLAN
A-5.1	ARCHITECTURAL DETAILS
A-5.3	ARCHITECTURAL DETAILS
A-5.2	ARCHITECTURAL DETAILS
M-0.0	MECHANICAL SYMBOLS & ABBREVIATIONS
M-1.1	MECHANICAL SITE PLAN
M-4.1	MECHANICAL ENLARGED SITE PLAN
M-5.1	MECHANICAL SCHEDULES & DETAILS
E-0.0	ELECTRICAL GENERAL NOTES, SYMBOLS & ABBREVIATIONS
E-0.2	ELECTRICAL SPECIFICATION
E-1.1	ELECTRICAL SITE PLAN
E-4.1	ELECTRICAL ENLARGED SITE PLAN
E-4.2	ELECTRICAL ENLARGED SITE PLAN - GROUNDING
E-5.1	ELECTRICAL DETAILS
E-5.2	ELECTRICAL DETAILS
E-7.1	ELECTRICAL SINGLE LINE DIAGRAM
C-1.0	TOPOGRAPHIC SURVEY
GR-1.0	GRADING AND EROSION CONTROL NOTES
GR-1.1	GRADING PLAN
GR-1.2	EROSION CONTROL PALN
S-0.1	STRUCTURAL GENERAL NOTES & ABBREVIATIONS
S-1.1	SITE PLAN, FOUNDATION PLAN, ROOF FRAMING PLAN
S-5.1	STRUCTURAL DETAILS
S-5.2	STRUCTURAL DETAILS
S-5.3	STRUCTURAL MONOPOLE & EQUIPMENT FOOTINGS

SALASO'BRIEN
|expect a difference|
3700 South Susan Street, Ste 150
Santa Ana, California 92704
949.517.4900 | 408.297.2995 (f)
salasobrien.com
California | Georgia | Louisiana
Montana | Texas | Washington
Licensed in 50 States

LICENSED ARCHITECT
JOSEPH EDWARD GONZALEZ
No. C19735
REN. 11-30-2023
STATE OF CALIFORNIA

SAN BERNARDINO COUNTY

800MHZ UPGRADES - CAJON PASS TOWER

WBSE #10.10.1011
CIP #20-225

ISSUE

MARK	DATE	DESCRIPTION
	12/23/21	95% CD
	12/16/22	100% CD

SOBE PROJECT NO:	2002862
DATE:	12/16/22
DRAWN BY:	TP
CHECKED BY:	AC
APPROVED BY:	PAC

SHEET TITLE
COVER SHEET

SCALE: AS NOTED AS NOTED
THIS DRAWING IS 30" X 42" AT FULL SIZE

G-0.0

THIS DRAWING IS 30" X 42" AT FULL SIZE, 15" X 21" AT HALF SIZE. © 2015 BY SALAS O'BRIEN ENGINEERS, INC.

NOT FOR BID

1 ARCHITECTURAL SITE PLAN
SCALE: 1/8" = 1' - 0"

GENERAL SHEET NOTES

REFERENCE SHEET NOTES

1 SEE ENLARGED PLAN ON A-4.1

SALASO'BRIEN
expect a difference
3700 South Susan Street, Ste 150
Santa Ana, California 92704
949.517.4900 | 408.297.2995 (f)
salasobrien.com
California | Georgia | Louisiana
Montana | Texas | Washington
Licensed in 50 States

LICENSED ARCHITECT
JOSEPH EDWARD GONZALEZ
No. C19735
REN. 11-30-2023
STATE OF CALIFORNIA

SAN BERNARDINO COUNTY

800MHZ UPGRADES - CAJON PASS TOWER

WBSE #10.10.1011
CIP #20-225

ISSUE

MARK	DATE	DESCRIPTION
	12/23/21	95% CD
	12/16/22	100% CD

SOBE PROJECT NO:	2002862
DATE:	12/16/22
DRAWN BY:	TP
CHECKED BY:	AC
APPROVED BY:	AC

SHEET TITLE
ARCHITECTURAL SITE PLAN

SCALE: AS NOTED
THIS DRAWING IS 30" X 42" AT FULL SIZE

A-1.1

THIS DRAWING IS 30" X 42" AT FULL SIZE, 15" X 21" AT HALF SIZE. © 2015 BY SALAS O'BRIEN ENGINEERS, INC.

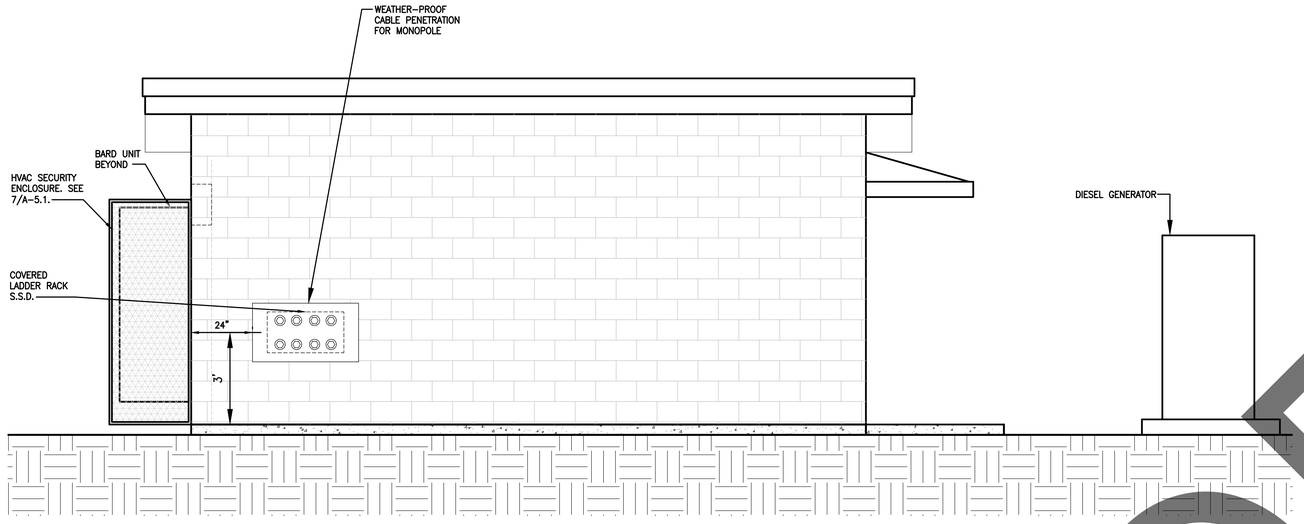

4 SOUTH ELEVATION
SCALE: 1/2" = 1' - 0"

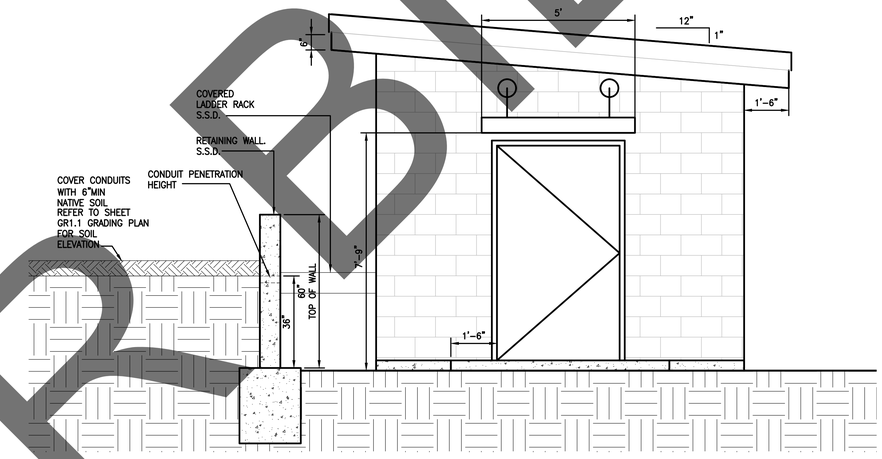

2 EAST ELEVATION
SCALE: 1/2" = 1' - 0"

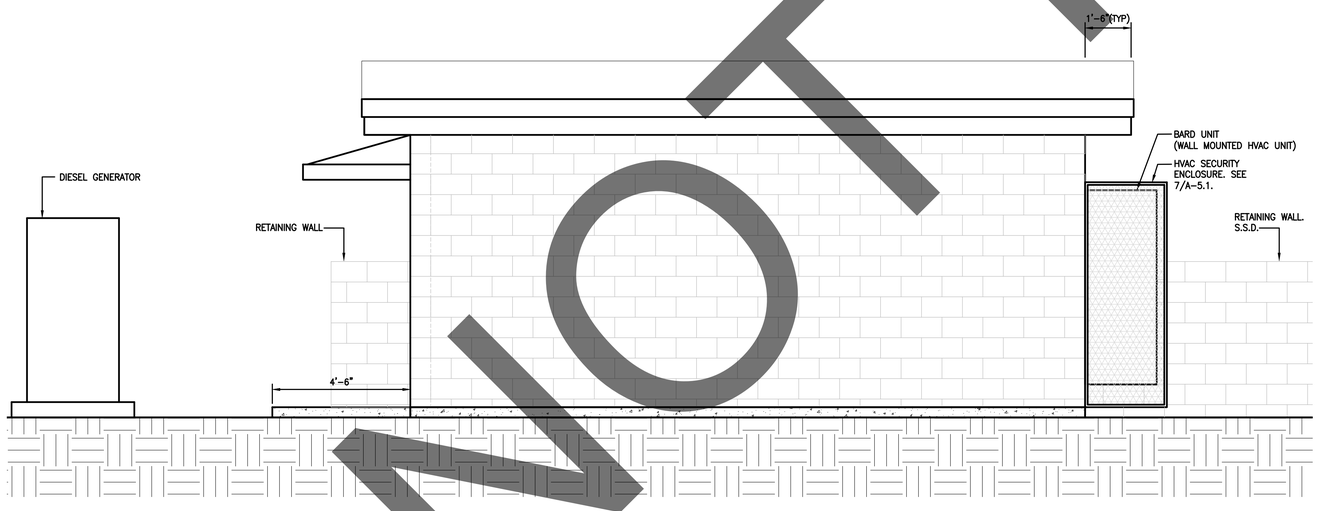

3 NORTH ELEVATION
SCALE: 1/2" = 1' - 0"

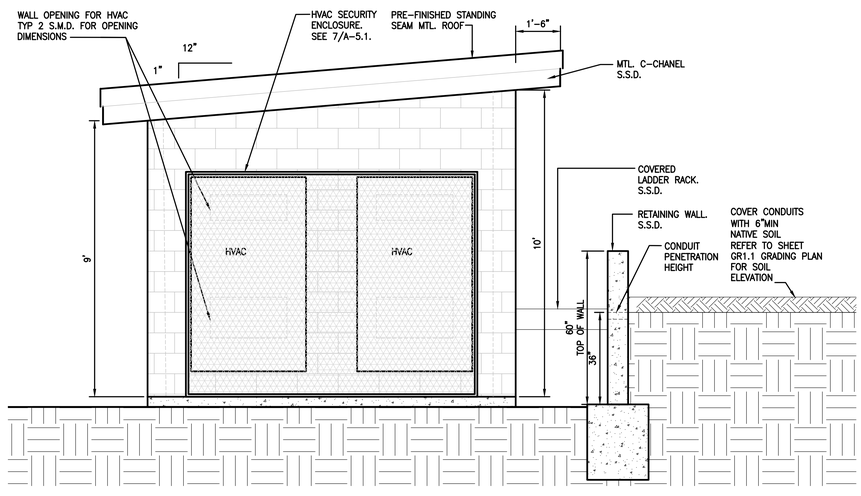

1 WEST ELEVATION
SCALE: 1/2" = 1' - 0"

NOT FOR BID

SALASO'BRIEN
expect a difference
3700 South Susan Street, Ste 150
Santa Ana, California 92704
949.517.4900 | 408.297.2995 (f)
salasobrien.com
California | Georgia | Louisiana
Montana | Texas | Washington
Licensed in 50 States

LICENSED ARCHITECT
JOSEPH EDWARD GONZALEZ
No. C19735
REN. 11-30-2023
STATE OF CALIFORNIA

SAN BERNARDINO COUNTY

800MHZ UPGRADES - CAJON PASS TOWER

WBSE #10.10.1011
CIP #20-225

ISSUE		
MARK	DATE	DESCRIPTION
	12/23/21	95% CD
	12/16/22	100% CD

SOBE PROJECT NO:	2002862
DATE:	12/16/22
DRAWN BY:	TP
CHECKED BY:	AC
APPROVED BY:	AC

SHEET TITLE
ARCHITECTURAL ELEVATIONS

SCALE: AS NOTED
THIS DRAWING IS 30" X 42" AT FULL SIZE

A-3.1

THIS DRAWING IS 30" X 42" AT FULL SIZE, 15" X 21" AT HALF SIZE. © 2015 BY SALAS O'BRIEN ENGINEERS, INC.

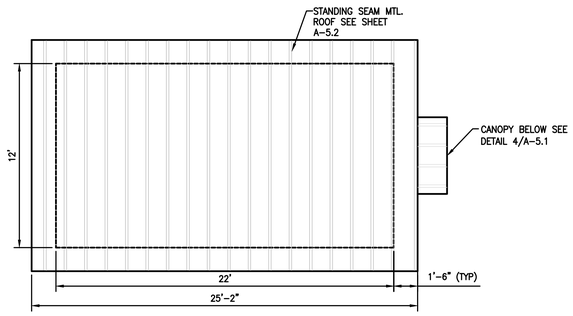

2 ARCHITECTURAL ROOF PLAN

SCALE: 1/4" = 1' - 0"

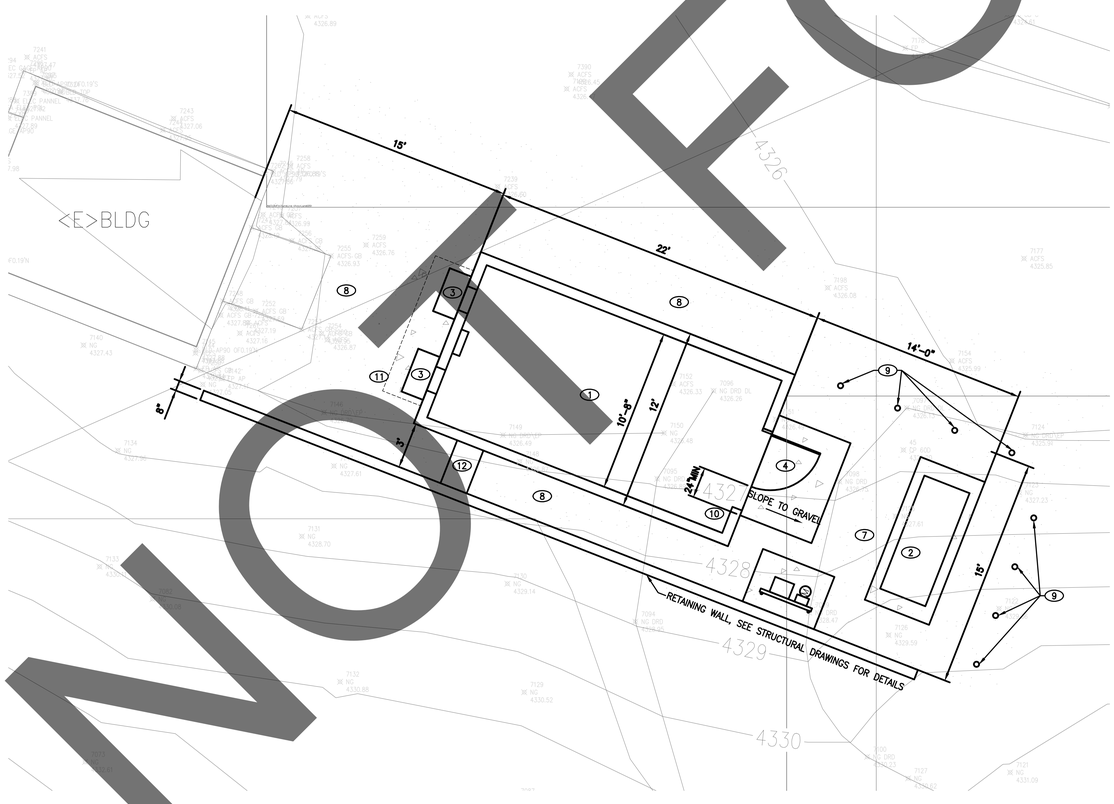

1 ARCHITECTURAL ENLARGED SITE PLAN

SCALE: 1/4" = 1' - 0"

GENERAL SHEET NOTES

1. CONTRACTOR TO PROVIDE SHOP DRAWINGS OF BUILDING INCLUDING ALL ARCHITECTURAL AND STRUCTURAL ELEMENTS, RELEVANT DIMENSIONS, ROOFING MANUFACTURER, SAMPLES, AND OPENING SIZES FOR REVIEW BY COUNTY AND ENGINEERS PRIOR TO CONSTRUCTION.
2. ANY BROKEN PAVEMENT OUTSIDE OF THE SCOPE OF WORK BROKEN DUE TO CONSTRUCTION ACTIVITY SHALL BE REPLACED BY THE CONTRACTOR AT THEIR EXPENSE.

REFERENCE SHEET NOTES

1. CONCRETE/MASONRY TELECOM BUILDING. SIZE 22'LONG X 12'WIDTH X 10' HEIGHT. SEE CIVIL & STRUCTURAL DRAWINGS. INSTALL W/ TWO COATS OF SILICONE ELASTOMERIC COATING (GE OPTIC 3101 OR EQUAL).
2. DIESEL POWER GENERATOR AND FUEL TANK ON CONCRETE PAD PER ELECTRICAL AND STRUCTURAL DRAWINGS.
3. WALL MOUNTED HVAC EQUIPMENT. SEE MECHANICAL DRAWINGS. INSTALL WITH SECURITY CAGE AROUND EQUIPMENT PER ARCHITECTURAL DETAILS.
4. MTL. DOOR AND FRAME SEE DOOR SCHEDULE 7/A-5.2.
5. ICE BRIDGE (24" WIDE) MOUNTED TO GROUND, GALVANIZED CONSTRUCTION. SEE ELECTRICAL AND STRUCTURAL DRAWINGS. NOT NEEDED IF REMOTE TOWER, UNDERGROUND CONDUITS FROM ANTENNA TOWER TO BUILDING.
6. 24"X16" BUILDING OPENING (NO INSTALLED BLOCKS) IN WALL FOR CONDUITS W/ PLATE AND SEALANT AROUND CONDUITS PER DETAIL 8/A-5.2. NOT NEEDED IF REMOTE TOWER
7. CONCRETE WALKWAY FOR MAINTENANCE AROUND GENERATOR AND TELECOM BUILDING.
8. SOIL FABRIC W/ 3" OF GRAVEL ON OPEN DIRT AREA.
9. REMOVABLE BOLLARDS, FILLED WITH CONCRETE, AT 4'-0" OC MAX.
10. 2A10BC FIRE EXTINGUISHER BRACKET AND SIGNAGE.
11. SINGLE CAGE FOR (2) HVAC UNITS. SEE 7/A5.1
12. COVERED LADDER RACK. S.S.D. FOR MOUNTING REQUIREMENT AND 1/A5.3 FOR DETAIL.

SALASO'BRIEN
expect a difference
3700 South Susan Street, Ste 150
Santa Ana, California 92704
949.517.4900 | 408.297.2995 (f)
salasobrien.com
California | Georgia | Louisiana
Montana | Texas | Washington
Licensed in 50 States

LICENSED ARCHITECT
JOSEPH EDWARD GONZALEZ
No. C19735
REN. 11-30-2023
STATE OF CALIFORNIA

SAN BERNARDINO COUNTY

800MHZ UPGRADES - CAJON PASS TOWER

WBSE #10.10.1011
CIP #20-225

ISSUE		
MARK	DATE	DESCRIPTION
	12/23/21	95% CD
	12/16/22	100% CD

SOBE PROJECT NO:	2002862
DATE:	12/16/22
DRAWN BY:	TP
CHECKED BY:	AC
APPROVED BY:	AC

SHEET TITLE
ARCHITECTURAL ENLARGED SITE PLAN & ROOF PLAN

SCALE: AS NOTED
THIS DRAWING IS 30" X 42" AT FULL SIZE

A-4.1

NOT FOR BID

THIS DRAWING IS 30" X 42" AT FULL SIZE, 15" X 21" AT HALF SIZE. © 2015 BY SALAS O'BRIEN ENGINEERS, INC.

NOT FOR BID

NOTES:
1. SECURITY CAGE (5 SIDED) MOUNTED TO WALL WITH 3/8"ø X 2" EFFECTIVE EMBEDMENT HILTI KB-TZ2 (STAINLESS STEEL) EXPANSION BOLTS AT EVERY 16" (MIN 3 PER SIDE & CENTERED ON BLOCK) FOR MASONRY. CAGE SHALL BE CONSTRUCTED OF 1/8" ANGLE STEEL WITH 16 GA WIRE MESH WITH MAXIMUM OPENING OF 1/2". SYSTEM SHALL COME WITH TWO FRONT HINGED SECTION AND TWO SLIDE OUT (OR HINGED) SIDE SECTIONS FOR ACCESS TO MECHANICAL COMPONENTS WITH TWO STAINLESS STEEL TAMPER PROOF LOCKS.
2. FRAME SHALL BE CONSTRUCTED OF 1-1/2" TUBE STEEL.
3. FINISH SHALL BE FACTORY APPLIED BLACK POWDER COATED FOR THE STEEL.
4. CAGE SIZE IS 114"W X 88"H X 32"D AND SHALL FIT OVER BOTH HVAC EQUIPMENT. FIELD VERIFY EXACT DIMENSIONS.
5. DESIGN BASES PER KIMBERLY STEEL CORPORATION OR APPROVED STEEL FABRICATOR (WWW.PROTECTIVECAGES.COM).
6. SECURITY CAGE SHALL NOT COVER DISCONNECT SWITCH.

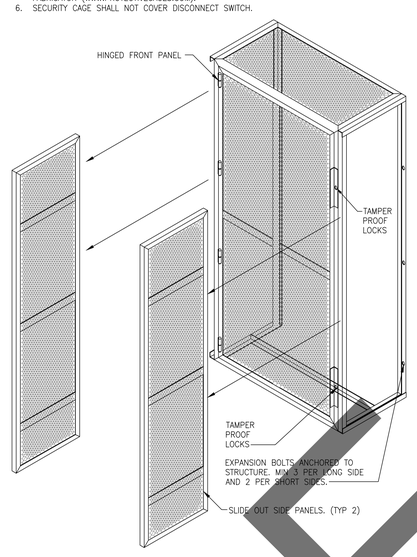

7 HVAC SECURITY ENCLOSURE (CAGE) DETAIL
SCALE: N.T.S.

3 NOT USED
SCALE: N.T.S.

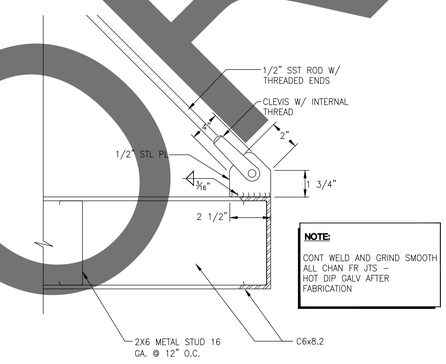

NOTE:
CONT WELD AND GRIND SMOOTH ALL CHAN FR JTS – HOT DIP GALV AFTER FABRICATION

5 CONNECTION AT CANOPY - END
SCALE: N.T.S.

2 NOT USED
SCALE: N.T.S.

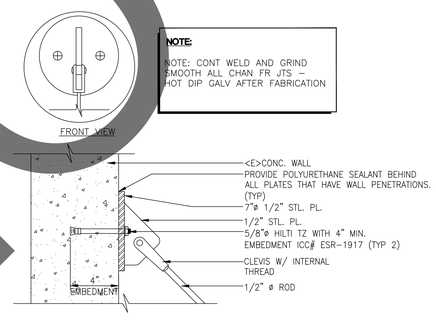

NOTE:
NOTE: CONT WELD AND GRIND SMOOTH ALL CHAN FR JTS – HOT DIP GALV AFTER FABRICATION

6 UPPER CONNECTION AT CANOPY
SCALE: N.T.S.

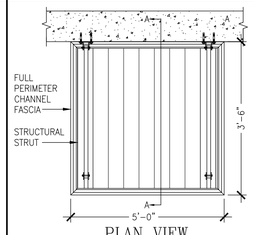

PLAN VIEW

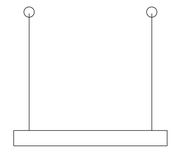

ELEVATION

NOTE:
1. ALL STEEL SHALL BE HOT DIPPED GALVANIZED. UNLESS NOTED OTHERWISE.
2. BODERIZE ALL STEEL PRIOR TO PAINTING.
3. PAINT THE CANOPY TO MATCH THE DOOR.

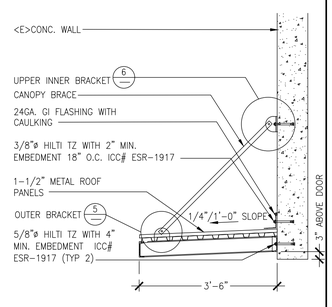

SECTION A-A

4 CANOPY DETAIL
SCALE: N.T.S.

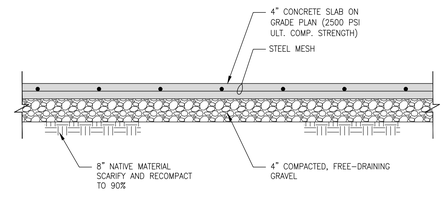

DETAIL GENERAL NOTES:
1. CONTROL JOINT PROVIDED UNIFORMLY TO SEPARATE THE SLAB, AND SHALL BE CUT IN A STRAIGHT LINE TO A DEPTH EQUAL TO 1-1/4". THE JOINT SHALL BE 1/8" TO 1/4" IN WIDTH. INSTALL JOINT AT EVERY 8 FT.
2. EXPANSION JOINT WITH 3/8" WIDTH SHALL BE PLACED AT A MAXIMUM OF 50FT FILLED WITH FULL DEPTH JOINT FILLER.

1 TYPICAL SLAB ON GRADE DETAIL
SCALE: N.T.S.

SALASO'BRIEN
expect a difference
3700 South Susan Street, Ste 150
Santa Ana, California 92704
949.517.4900 | 408.297.2995 (f)
salasobrien.com
California | Georgia | Louisiana
Montana | Texas | Washington
Licensed in 50 States

LICENSED ARCHITECT
JOSEPH EDWARD GONZALEZ
No. C19735
REN. 11-30-2023
STATE OF CALIFORNIA

SAN BERNARDINO COUNTY

800MHZ UPGRADES - CAJON PASS TOWER

WBSE #10.10.1011
CIP #20-225

ISSUE

MARK	DATE	DESCRIPTION
	12/23/21	95% CD
	12/16/22	100% CD

SOBE PROJECT NO:	2002862
DATE:	12/16/22
DRAWN BY:	TP
CHECKED BY:	AC
APPROVED BY:	AC

SHEET TITLE
ARCHITECTURAL DETAILS

SCALE: AS NOTED
THIS DRAWING IS 30" X 42" AT FULL SIZE

A-5.1

THIS DRAWING IS 30" X 42" AT FULL SIZE, 15" X 21" AT HALF SIZE. © 2015 BY SALAS O'BRIEN ENGINEERS, INC.

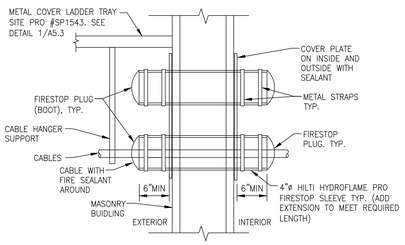

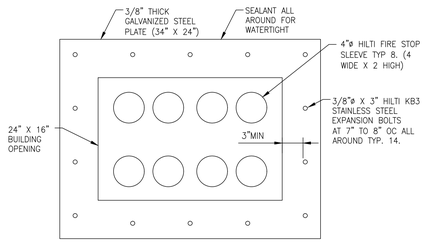

NOTES:
1. ALL PLUGS (BOOTS) SHALL BE WATERPROOF AND DESIGNED FOR OUTDOORS EXPOSURE. EQUIPMENT SHALL BE RESISTANT TO OZONE, SUNLIGHT OR EXTREME HOT AND COLD RANGES (10°F TO 120°F).

8 CABLE PENETRATION DETAIL
SCALE: N.T.S.

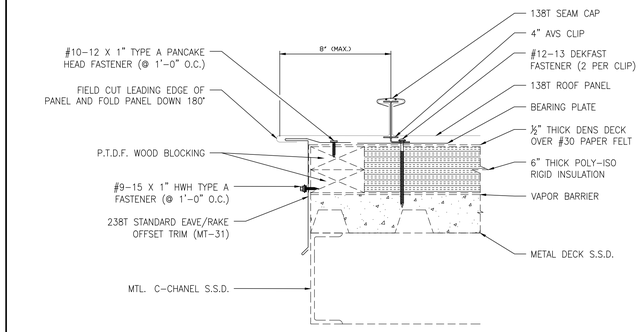

6 ALTERNATE RAKE DETAIL (FLOATING)
SCALE: N.T.S.

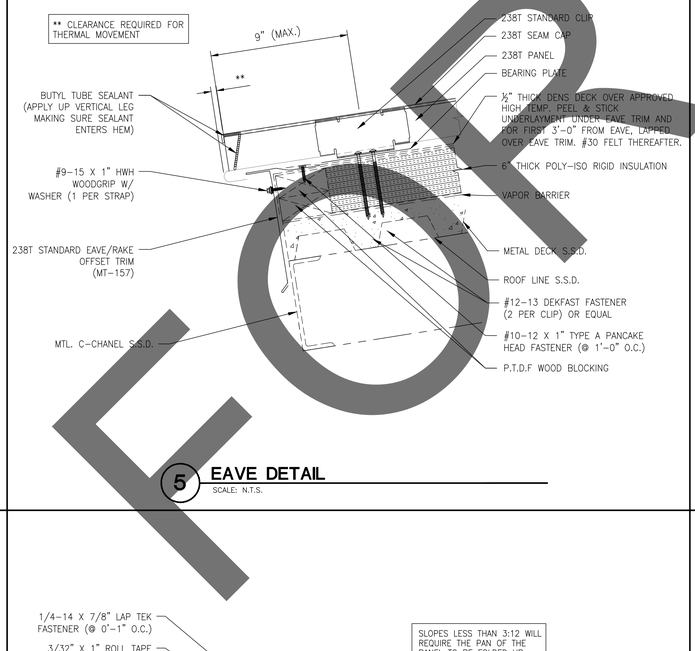

5 EAVE DETAIL
SCALE: N.T.S.

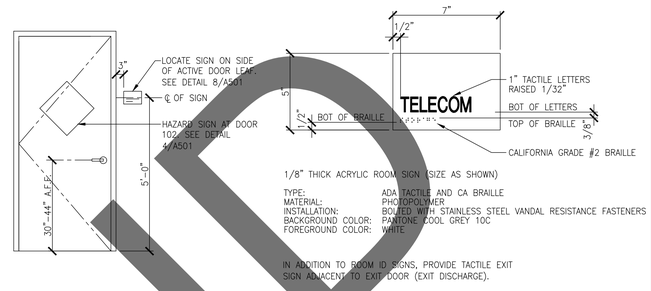

1/8" THICK ACRYLIC ROOM SIGN (SIZE AS SHOWN)

TYPE: ADA TACTILE AND CA BRAILLE
MATERIAL: PHOTOPOLYMER
INSTALLATION: BOLTED WITH STAINLESS STEEL VANDAL RESISTANCE FASTENERS
BACKGROUND COLOR: PANTONE COOL GREY 10C
FOREGROUND COLOR: WHITE

IN ADDITION TO ROOM ID SIGNS, PROVIDE TACTILE EXIT SIGN ADJACENT TO EXIT DOOR (EXIT DISCHARGE).

3 DOOR SIGNAGE DETAILS
SCALE: N.T.S.

RED - Flammable
4 – Extremely Flammable; **3** – Ignites at normal temperatures;
2 – Ignites when moderately heated; **1** – Must be preheated to burn;
0 – Will not burn

BLUE – Health
4 – Too dangerous To enter vapor or liquid;
3 – Extremely dangerous Use full protective clothing
2 – Hazardous – Use breathing apparatus
1 – Slightly hazardous
0 – Like ordinary material

YELLOW – REACTIVITY
4 – May detonate – vacate area if materials are exposed to fire
3 – Strong shock or heat may detonate – use monitors from behind explosive Barriers
2 – Violent chemical change possible – use hose streams from a distance
1 – Unstable if heated – use normal precautions
0 – Normally stable

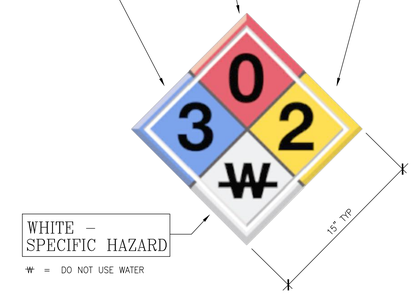

WHITE – SPECIFIC HAZARD
W = DO NOT USE WATER

2 HAZARD SPECIFIC SIGN
SCALE: N.T.S.

FINISH SCHEDULE – INTERIOR												
ROOM FINISH MATERIAL					COLOR SCHEDULE							
NO.	LOCATION	CLG HT	CLG	FLOOR	BASE	NORTH WALL	EAST WALL	SOUTH WALL	WEST WALL	FRAME COLOR	DOOR COLOR	INTR. ELEV.	REMARKS
–	TELECOMMUNITCATION ROOM INTERIOR	VARIES	P1	ANTI-STATIC VCT	4" BLACK	–	–	–	–	P2	P2		1

COLOR SCHEDULE CODE:

P1 ACRYLIC EGGSHELL COLOR TO MATCH EXISTING. P2 ACRYLIC SEMI-GLOSS ENAMEL TO MATCH EXISTING. P3 CMU SEALER.

REMARKS:

1. PRIME & PAINT ALL EXPOSED STEEL BEAMS AND INTERIOR METAL CEILING.

DOOR SCHEDULE											
DOOR TYPE SEE FL. PLAN	SIZE	FRAME TYPE	LOUVER SIZE	HEAD	JAMB	SILL	HDWE. (SEE SPEC.)	LITE	LABEL	PANIC	REMARKS
101	4'-0"x7'-0"x1-3/4"	HM	–	1/A-5.2	1/A-5.2	1/A-5.2	A	–	90. MIN.	–	1 2 3

DOOR SCHEDULE NOTES:

1. SEE DETAIL 3/A-5.2 FOR DOOR SIGNS
2. EXTERIOR DOOR TO HAVE DOOR SHOE & THRESHOLD
3. PRIME & POLYURETHANE PAINT ALL DOORS/FRAMES – COLOR TO MATCH EXISTING

GROUP A:
HINGES: SST BALL BEARING HAGER 3 EA BB1279.4.5*5.625
LOCKSET: BEST 45H-7EU-16H-625, STORAGE ROOM FUNCTION 'D'
COORDINATE WITH COUNTY OF SAN BERNADINO
THRESHOLDS, SWEEPS, SEALS: PEMKO
DOOR BOTTOM: PEMKO 77221
FLOOR STOP: HAGER 243F 625
DOOR CLOSURE: SARGENT 1431 RUO EN
SILENCER: IVE SR64 (3 PER DOOR)

FINISH SCHEDULE – EXTERIOR	
EXTERIOR CMU	ANTI-GRAFFITI SEALER
EXTERIOR DOORS	ACRYLIC SEMI-GLOSS ENAMEL
EXTERIOR ROOF AND TRIM	PRE-FINISHED METAL AND HARDWARE
EXTERIOR STEEL	PAINT ALL EXPOSED STEEL

GRAFFITI SEALER:

A. CHEMPROBE COATING SYSTEMS, L.P. OR APPROVED EQUAL.
   1. MASONRY DIVISION OF TNEMEC COMPANY, INC., 2805 INDUSTRIAL LANE,GARLAND, TX
      PH: 800-760-6776, FX: 972-271-5553

B. GENERAL: ALL PRODUCTS SHALL BE SOLVENT BASED, RTV SILICONE RUBBER WITH LESS THAN 700 GRAMS PER LITER VOC. ALL PRODUCTS SHALL CONTAIN A MINIMUM OF 15 PERCENT SOLIDS.
   1. TNEMEC / CHEMPROBE – DUR A PELL GS SOLVENT BASED 15% SOLIDS RTV SILICONE RUBBER WATER REPELLENT AND GRAFFITI PROTECTION SYSTEM.
      PH: 800-760-6776

7 DOOR / INTERIOR /EXTERIOR FINISH SCHEDULES
SCALE: N.T.S.

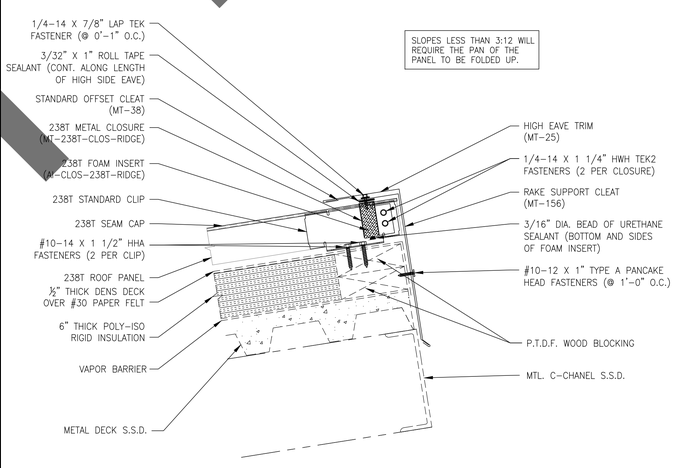

4 HIGH SIDE EAVE DETAIL
SCALE: N.T.S.

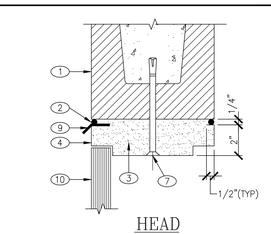

HEAD

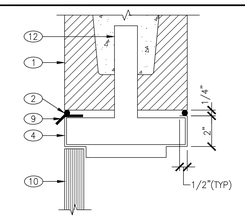

JAMB/HEAD ANCHOR (OPTIONAL)

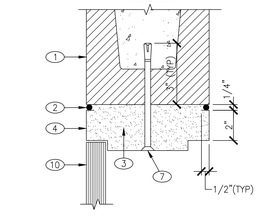

JAMB

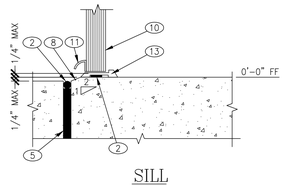

SILL

DOOR DETAIL NOTES

1. CMU WALL.
2. SEALANT, CONTINUOUS (TYP).
3. GROUT, CONTINUOUS (TYP).
4. HOLLOW METAL STEEL FRAME.
5. EXPANSION JOINT.
6. CONCRETE FLOOR.
7. 3/8"ø CORROSION-PROOF COUNTERSUNK FLAT HEAD EXPANSION ANCHOR, AT CORNERS AND AT 24" OC OR AS SHOWN.
8. EASE EDGE (TYP).
9. 24 GA G.I. FLASHING
10. DOOR.
11. DOOR SHOE.
12. MASONRY DOOR FRAME ANCHOR
13. THRESHOLD

1 DOOR DETAIL
SCALE: N.T.S.

NOT FOR BID

SALASO'BRIEN
expect a difference
3700 South Susan Street, Ste 150
Santa Ana, California 92704
949.517.4900 | 408.297.2995 (f)
salasobrien.com
California | Georgia | Louisiana
Montana | Texas | Washington
Licensed in 50 States

LICENSED ARCHITECT JOSEPH EDWARD GONZALEZ No. C19735 REN. 11-30-2023 STATE OF CALIFORNIA

SAN BERNARDINO COUNTY

800MHZ UPGRADES - CAJON PASS TOWER

WBSE #10.10.1011
CIP #20-225

ISSUE		
MARK	DATE	DESCRIPTION
	12/23/21	95% CD
	12/16/22	100% CD

SOBE PROJECT NO:	2002862
DATE:	12/16/22
DRAWN BY:	TP
CHECKED BY:	AC
APPROVED BY:	AC

SHEET TITLE
ARCHITECTURAL DETAILS

SCALE: AS NOTED
THIS DRAWING IS 30" X 42" AT FULL SIZE

A-5.2

THIS DRAWING IS 30" X 42" AT FULL SIZE, 15" X 21" AT HALF SIZE. © 2015 BY SALAS O'BRIEN ENGINEERS, INC.

PARTS LIST						
ITEM	QTY	PART NO.	PART DESCRIPTION	LENGTH	UNIT WT.	NET WT.
1	3	SLPR8	PVC ROOFTOP SLEEPER	31 7/8 in	3.03	9.10
2	6	RCCLIP	ROOFTOP COVER CLIP ANGLE		0.36	2.14
3	1	X-SP1543	8 RUN ROOFTOP COVER		75.89	75.89
4	12	G38114	3/8" X 1-1/4" HDG HEX BOLT GR5		0.06	0.75
5	18	G38FW	3/8" HDG USS FLATWASHER		0.01	0.21
6	12	G38LW	3/8" HDG LOCKWASHER		0.01	0.08
7	12	G38NUT	3/8" HDG HEAVY 2H HEX NUT		0.03	0.41
8	3	RN38	RETAINING NUT 3/8" X 1-1/4"		0.04	0.12
9	3	SS38114	SS 3/8" X 1-1/4" BOLT	1 1/4 in	0.06	0.18
10	3	SS38FW	3/8" STAINLESS FLATWASHER		0.01	0.03
					TOTAL WT. #	88.91

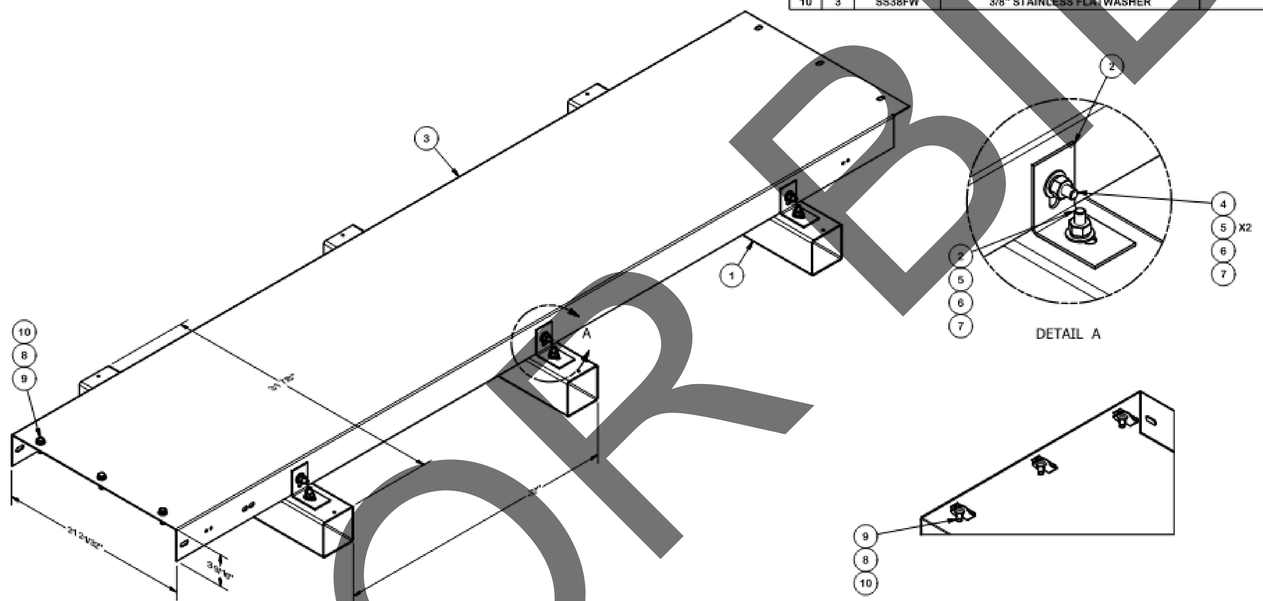

TOLERANCE NOTES

TOLERANCES ON DIMENSIONS, UNLESS OTHERWISE NOTED ARE:
SAWED, SHEARED AND GAS CUT EDGES *(± 0.030")*
DRILLED AND GAS CUT HOLES *(± 0.030")* - NO CONING OF HOLES
LASER CUT EDGES AND HOLES *(± 0.010")* - NO CONING OF HOLES
BENDS ARE ± 1/2 DEGREE
ALL OTHER MACHINING *(± 0.030")*
ALL OTHER ASSEMBLY *(± 0.060")*

PROPRIETARY NOTE:
THE DATA AND TECHNIQUES CONTAINED IN THIS DRAWING ARE PROPRIETARY INFORMATION OF VALMONT INDUSTRIES AND CONSIDERED A TRADE SECRET. ANY USE OR DISCLOSURE WITHOUT THE CONSENT OF VALMONT INDUSTRIES IS STRICTLY PROHIBITED.

DESCRIPTION: ROOFTOP COAX KITS FOR 8 RUNS OF COAX

SITE PRO 1 — valmont structures

Engineering Support Team: 1-888-753-7446

Locations: New York, NY; Atlanta, GA; Los Angeles, CA; Plymouth, IN; Salem, OR; Dallas, TX

CPD NO.		DRAWN BY	ENG. APPROVAL	PART NO.	PAGE
ile0		CEK 8/30/2011		SP1543	1 OF 1
CLASS	SUB	DRAWING USAGE	CHECKED BY	DWG. NO.	
81	01	CUSTOMER	BMC 9/2/2011	SP1543	

1 METAL COVER LADDER TRAY DETAIL

SCALE: N.T.S.

NOT FOR BID

SALASO'BRIEN
expect a difference
3700 South Susan Street, Ste 150
Santa Ana, California 92704
949.517.4900 | 408.297.2995 (f)
salasobrien.com
California | Georgia | Louisiana
Montana | Texas | Washington
Licensed in 50 States

LICENSED ARCHITECT JOSEPH EDWARD GONZALEZ No. C19735 REN. 11-30-2023 STATE OF CALIFORNIA

SAN BERNARDINO COUNTY

800MHZ UPGRADES - CAJON PASS TOWER

WBSE #10.10.1011
CIP #20-225

ISSUE		
MARK	DATE	DESCRIPTION
	12/23/21	95% CD
	12/16/22	100% CD

SOBE PROJECT NO:	2002862
DATE:	12/16/22
DRAWN BY:	TP
CHECKED BY:	AC
APPROVED BY:	AC

SHEET TITLE
ARCHITECTURAL DETAILS

SCALE: AS NOTED
THIS DRAWING IS 30" X 42" AT FULL SIZE

A-5.3

THIS DRAWING IS 30" X 42" AT FULL SIZE, 15" X 21" AT HALF SIZE. © 2015 BY SALAS O'BRIEN ENGINEERS, INC.

1/2" = 1'-0"
1/4" = 1'-0"
1/8" = 1'-0"
1" = 10'-0"
1" = 30'-0"
1" = 80'-0"
1" = 100'-0"

NOT FOR BID

SHEET INDEX

M-0.0	MECHANICAL SYMBOLS & ABBREVIATIONS
M-1.1	MECHANICAL BOILER ROOM SITE PLAN
M-4.1	MECHANICAL ENLARGED SITE PLAN
M-5.1	MECHANICAL DETAILS & SCHEDULES

SUMMARY OF WORK

1. F&I TWO (2) BARD HVAC UNITS MOUNTED ON EXTERIOR WALL TO BE IN LEAD-LAG.
2. F&I DRYWELL FOR CONDENSATE DRAIN.
3. F&I NEW THERMOSTATS AND WALL LOUVERS.

GENERAL

- EXTENT OF DEMOLITION
- NEW TO EXISTING CONNECTION
- REVISION NUMBER
- WORK ITEM (ARCHITECTURAL)
- WORK ITEM (MECHANICAL)
- WORK ITEM (ELECTRICAL)
- WORK ITEM (TELECOMMUNICATION)
- WORK ITEM (PLUMBING)
- WORK ITEM (STRUCTURE)
- DETAIL DESIGNATION — DETAIL NUMBER; DRAWING NUMBER (IF BLANK, SAME SHEET)
- EQUIPMENT DESIGNATION — EQUIPMENT TYPE; EQUIPMENT NUMBER
- SECTION DESIGNATION — SECTION NUMBER; DRAWING NUMBER
- TO BE DEMOLISHED — <N> EQUIPMENT
- TO BE DEMOLISHED — RELOCATED EQUIPMENT

PIPING

- ARROW INDICATES DIRECTION OF FLOW
- EXISTING PIPING (ABOVE GRADE OR FLOOR)
- EXISTING PIPING (BELOW GRADE OR FLOOR)
- NEW PIPING (ABOVE GRADE OR FLOOR)
- NEW PIPING (BELOW GRADE OR FLOOR)
- PIPE TO BE REMOVED (ABOVE GRADE OR FLOOR)
- PIPE TO BE REMOVED (BELOW GRADE OR FLOOR)

HEATING

BBD	BOILER BLOW DOWN
CR	CONDENSATE RETURN
CW	CITY WATER
FO(R)(S)	FUEL OIL (RETURN)(SUPPLY)
FOV	FUEL OIL TANK VENT
(P)(S)HHW(R)(S)	(PRIMARY)(SECONDARY) HEATING HOT WATER (RETURN)(SUPPLY)
HTW(R)(S)	HIGH-TEMPERATURE HOT WATER (RETURN)(SUPPLY)
HPS	HIGH PRESSURE STEAM
IW	INDUSTRIAL WATER
(L)(M)(H)PS	(LOW)(MEDIUM)(HIGH) PRESSURE STEAM
(L)(M)(H)PCR	(LOW)(MEDIUM)(HIGH) PRESSURE CONDENSATE RETURN
MU	MAKEUP WATER
PCR	PUMPED CONDENSATE RETURN
VR	VACUUM CONDENSATE RETURN

AIR CONDITIONING

CW(R)(S)	CONDENSER WATER (RETURN)(SUPPLY)
CHW(R)(S)	CHILLED WATER (RETURN)(SUPPLY)
D	DRAIN
HC(R)(S)	HOT/CHILLED WATER (RETURN)(SUPPLY)
PCHW(R)(S)	PRIMARY CHILLED WATER (RETURN)(SUPPLY)
SCHW(R)(S)	SECONDARY CHILLED WATER (RETURN)(SUPPLY)
TCHW(R)(S)	TERTIARY CHILLED WATER (RETURN)(SUPPLY)

PIPING SPECIALTIES

- AAV — AUTOMATIC AIR VENT
- MAV — MANUAL AIR VENT
- S — AIR SEPARATOR
- ALIGNMENT GUIDE
- ANCHOR
- BFP — BACK FLOW PREVENTER
- BALL JOINT
- DIRT POCKET
- EJ-1 — EXPANSION JOINT
- X H L — EXPANSION LOOP
- FLEXIBLE CONNECTOR
- FILTER DRYER
- FLOWMETER
- HOSE CONNECTOR
- HB — HOSE BIBB
- MUA — MAKEUP ASSEMBLY
- M — METER
- POT FEEDER
- PI — PRESSURE GAUGE AND COCK
- 2, 1 — PUMP
- STRAINER
- STRAINER, W/BLOW OFF
- TEST PORT (PETE'S PLUG)
- TI 2, 1 — THERMOMETER
- THERMOMETER, WELL
- ST — STEAM TRAP
- SUCTION DIFFUSER
- TRANSVERSE BRACING
- R — GAS REGULATOR

VALVES

- BALL
- BUTTERFLY
- GATE
- GATE, ANGLE
- GLOBE
- GLOBE, ANGLE
- THREE WAY

VALVES, SPECIAL DUTY

- CHECK, SWING GATE
- CIRCUIT SETTER
- NEEDLE
- PRV-1 — PRESSURE REDUCING (NUMBER & SPECIFY)
- PRESSURE REGULATOR
- RELIEF (R) OR SAFETY (S)
- SEISMIC VALVE
- MUA — MAKE UP WATER ASSEMBLY
- BACK PRESSURE
- PLUG VALVE
- TRIPLE DUTY VALVE (STOP CHECK & BALANCE W/PRESSURE TAPS)
- BFP — REDUCED PRESSURE BACKFLOW PREVENTER
- FLOW CONTROL

ACTUATORS

- M — MOTOR
- PNEUMATIC
- S — SOLENOID

CONTROLS

AI	ANALOG INPUT
AO	ANALOG OUTPUT
BT	BYPASS TIMER
C	CONTROLLER
DP	DIFFERENTIAL PRESSURE TRANSMITTER
DI	DIGITAL (ON/OFF) INPUT
DO	DIGITAL (ON/OFF) OUTPUT
FE	FLOW ELEMENT
FT	FLOW TRANSMITTER
FS	FLOW SWITCH
FM	FLOWMETER
OFM-I	FLOWMETER, ORIFICE
H	HUMIDITY CONTROLLER
H	HUMIDITY TRANSMITTER
M	MOTOR/ACTUATOR
MS	MOTOR STARTER
PI	PRESSURE INDICATOR
PID	PID CONTROL LOOP (REPRESENTATION)
P/S	PRESSURE SWITCH
PT	PRESSURE TRANSMITTER
RHC	REHEAT COIL
R	RELAY COIL
S	SENSOR
T	TEMPERATURE SENSOR
TE	TEMPERATURE ELEMENT
TI	TEMPERATURE INDICATOR
TT	TEMPERATURE TRANSMITTER
T	THERMOSTAT OR TEMPERATURE SENSOR (DDC) (36" TO 48" AFF.)
H/C	HEATING COIL
C/C	COOLING COIL
D/X	DIRECT EXPANSION COIL
G/F	GAS FIRED HEAT EXCHANGER
VFD	VARIABLE FREQUENCY DRIVE

ABBREVIATIONS

@	AT
AAV	AUTOMATIC AIR VENT
AC	AIR CONDITIONING UNIT DESIGNATION
ACC	AIR COOLED CONDENSER
ACM	ASBESTOS CONTAINING MATERIAL
ACP	ASBESTOS CEMENT PIPE
AD	ACCESS DOOR
AFF	ABOVE FINISHED FLOOR
AFG	ABOVE FINISHED GRADE
AH	AIR HANDLER
AHU	AIR HANDLING UNIT
AHUC	AIR HANDLING UNIT CONTROLLER
AI	ANALOG INPUT
ALM	ALARM
ANSI	AMERICAN NATIONAL STANDARDS INSTITUTE
AO	ANALOG OUTPUT
APD	AIR PRESSURE DROP (IN.W.G.)
ARCH	ARCHITECTURAL
AS	AIR SEPARATOR
ASJ	ALL SERVICE JACKET
ASME	AMERICAN SOCIETY OF MECHANICAL ENGINEERS
ASSY	ASSEMBLY
ASTM	AMERICAN SOCIETY FOR TESTING AND MATERIALS
B	BOILER
BAS	BUILDING AUTOMATION SYSTEM
BAV	BALANCING VALVE
BDD	BACKDRAFT DAMPERS
BFP	BACKFLOW PREVENTER
BFV	BUTTERFLY VALVE
BHP	BRAKE HORSEPOWER
BLDG	BUILDING
BOD	BOTTOM OF DUCT
BOP	BOTTOM OF PIPE
BR	BOILER
BTU	BRITISH THERMAL UNIT
BTUH	BRITISH THERMAL UNIT PER HOUR
BUR	BUILT-UP ROOFING
BV	BALL VALVE
℄	CENTERLINE
CA	COMPRESSED AIR
CC, C/C	COOLING COIL
CD	CONDENSATE DRAIN
CFF	CAP FOR FUTURE
CFM or ∯	CUBIC FEET PER MINUTE
CFT	CHEMICAL FEED TANK
CGWS/R	COGEN WATER SUPPLY/RETURN
CHCP	CHILLER CONTROL PANEL
CHW(R)(S)(T)	CHILLED WATER (RETURN)(SUPPLY)(TEMPERATURE)
CLG	CEILING
CLR	CENTERLINE RADIUS
CO	CLEAN-OUT
COL	COLUMN
CONC	CONCRETE
CONN	CONNECT OR CONNECTION
CONT	CONTINUATION
CONTR.	CONTRACTOR
CP	CONTROL PANEL
CR	CONDENSATE RETURN
CRAC	COMPUTER ROOM AIR CONDITIONER
CT	COOLING TOWER
CTL	CONTROL
CU	COPPER
CV	CONTROL VALVE
CW	CITY WATER
CWP	CONDENSER WATER PUMP
CW(R)(S)(T)	CONDENSER WATER (RETURN)(SUPPLY) (TEMPERATURE)
D	DRAIN
DA	DEAERATOR
DB	DRY BULB
DCW	DOMESTIC CITY WATER
DDC	DIRECT DIGITAL CONTROL
DF	DOUGLAS FIR
DHW(R)	DOMESTIC HOT WATER (RETURN)
DI	DISCRETE INPUT
DIA	DIAMETER
DISC	DISCONNECT
DN	DOWN
DO	DISCRETE OUTPUT
DP	DIFFERENTIAL PRESSURE
DPS	DIFFERENTIAL PRESSURE SWITCH
DPT	DIFFERENTIAL PRESSURE TRANSDUCER
DWDI	DOUBLE WIDTH, DOUBLE INLET
DWG	DRAWING
DWH	DOMESTIC WATER HEATER
DX	DIRECT EXPANSION
<E>	EXISTING
EA(T)	EXHAUST AIR (TEMPERATURE)
EAD	EXHAUST AIR DUCT
EAT	ENTERING AIR TEMPERATURE
EER	ENERGY EFFICIENCY RATIO
EF	EXHAUST FAN
EJ	EXPANSION JOINT
EL	EXPANSION LOOP
ELEV	ELEVATION
ELEC	ELECTRICAL
EMCS	ENERGY MANAGEMENT & CONTROL SYSTEM
EMS	ENERGY MANAGEMENT SYSTEM
EOD	EXTENT OF DEMOLITION
E/P	ELECTRO/PNEUMATIC TRANSDUCER
EQ	EQUAL
EQUIP.	EQUIPMENT
ESP	EXTERNAL STATIC PRESSURE (IN.W.G.)
ET	EXPANSION TANK
EWS	EMERGENCY EYEWASH AND SHOWER
EWT	ENTERING WATER TEMPERATURE
<F>	FUTURE
F	FAHRENHEIT
FA	FACE AREA
FAF	FORCED AIR FURNACE
FC	FLEXIBLE CONNECTION
FCO	FLOOR CLEAN OUT
FCU	FAN COIL UNIT
FD	FIRE DAMPER
FDC	FIRE DEPARTMENTCONNECTION
FDD	FLUE DISCHARGE DEFLECTOR
FGR	FUE GAS REGULATOR
FHC	FIRE HOSE CABINET
FLA	FULL LOAD AMPS
FLEX	FLEXIBLE
FLR	FLOOR
FM	FLOW METER
FO(R)(S)	FUEL OIL (RETURN)(SUPPLY)
FOV	FUEL OIL VENT
FPF	FINS PER FOOT
FRP	FIBER REINFORCED POLYMER
FS	FLOW SWITCH
FSD	COMBINATION FIRE AND SMOKE DAMPER
FT	FLOW TRANSMITTER or FEET
FW	FIRE WATER
G	GAS
GA	GAUGE
GAL	GALLONS
GALV	GALVANIZED
GF	GAS FURNACE
GPM	GALLONS PER MINUTE
GSM	GALVANIZED SHEET METAL
GV	GATE VALVE
H	HUMIDIFIER
HB	HOSE BIBB
HC	HEATING COIL
HDR	HEADER
HGR	HANGER
HHW(R)(S)(T)(P)	HEATING HOT WATER (RETURN)(SUPPLY)(PUMP) (TEMPERATURE)
HP	HORSE POWER
HPCR	HIGH PRESSURE CONDENSATE RETURN
HPS	HIGH PRESSURE STEAM
HT	HEIGHT
HVAC	HEATING VENTILATING AND AIR CONDITIONING
HWP	HOT WATER PUMP
HX	HEAT EXCHANGER
HZ	HERTZ; CYCLES PER SECOND
IA	INSTRUMENT AIR
ICW	INDUSTRIAL COLD WATER
ID	INSIDE DIAMETER
IE	INVERT ELEVATION
IN.	INCH
IN.W.G.	INCHES WATER GAGE (PRESSURE)
IRL	IRRIGATION LINE
KW	KILOWATT
LAT	LEAVING AIR TEMPERATURE
LBS	POUNDS
LPS	LOW PRESSURE STEAM
LRP	LIGHTING RELAY PANEL
LWCO	LOW WATER CUT OFF
LWT	LEAVING WATER TEMPERATURE
MA(T)	MIXED AIR (TEMPERATURE)
MAV	MANUAL AIR VENT
MAX	MAXIMUM
MBH	1,000 BTU PER HOUR
MCC	MOTOR CONTROL CENTER
MD	MANUAL VOLUME DAMPER
MECH	MECHANICAL
MFR	MANUFACTURER
MH	MANHOLE
MIN	MINIMUM
MMBTUH	MILLIONS BTU PER HOUR
MOCP	MAXIMUM OVER CURRENT PROTECTION
MOT	MOTORIZED
MPG	MEDIUM PRESSURE GAS
MR	MECHANICAL ROOM
MT, MTD, MTG	MOUNT, MOUNTED, MOUNTING
MU	MAKE-UP
MUA	MAKE UP ASSEMBLY
<N>	NEW
NAC	NETWORK AREA CONTROLLER
N.C.	NORMALLY CLOSED
NFPA	NATIONAL FIRE PROTECTION ASSOCIATION
NIC	NOT IN CONTRACT
NOX	NITROGEN OXIDE
N.O.	NORMALLY OPEN
NPSH(R)	NET POSITIVE SUCTION HEAD (REQUIRED)
N.T.S.	NOT TO SCALE
OA(G)	OUTSIDE AIR (GRILLE)
OA(T)	OUTSIDE AIR (TEMPERATURE)
OAD	OUTSIDE AIR DAMPER
OAI	OUTSIDE AIR INTAKE
OBD	OPPOSED BLADE DAMPER
O.C.	ON CENTER
OD	OUTSIDE DIMENSION or OUTSIDE DIAMETER
OS&Y	OUTSIDE STEM & YOKE GATE VALVE
OV	OUTLET VELOCITY
OX	OXYGEN
OWS	OPERATOR'S WORK STATION
ℙ	PLATE
P	PUMP
PCHW(R)(S)(T)	PRIMARY CHW (RETURN)(SUPPLY)(TEMPERATURE)
PCHWP	PRIMARY CHW PUMP
PCR	PUMPED CONDENSATE RETURN
PD	PRESSURE DROP
PE	PNEUMATIC TO ELECTRIC RELAY
PEC	PROGRAMMABLE EQUIPMENT CONTROLLER
PG	PIPE GUIDE
PHW(R)(S)	PRIMARY HOT WATER (RETURN)(SUPPLY)
P&ID	PROCESS & INSTRUMENTATION DIAGRAM
PIV	POST INDICATING VALVE
PLY or PLYWD	PLYWOOD
PM	POWER METER
POC	POINT OF CONNECTION
PRS	PRESSURE REDUCING STATION
PRV	PRESSURE REDUCING VALVE
PS	PRESSURE SWITCH
PSI(G)	POUNDS PER SQUARE INCH (GAUGE)
PS-N	PIPE SUPPORT DESIGNATION
PTDF	PRESSURE TREATED DOUGLAS FIR
PVC	POLYVINYL CHLORIDE
R	RELAY
<RR>	REMOVE AND RELOCATE
<REL>	RELOCATED
RA	RETURN AIR
RAD	RETURN AIR DUCT
RAG	RETURN AIR GRILLE
RA(T)	RETURN AIR (TEMPERATURE)
RD	ROOF DRAIN
REQ'D	REQUIRED
RF	RETURN AIR FAN
RH	RELATIVE HUMIDITY
RHC	REHEAT COIL
RIM	RIM ELEVATION
RIP	RETIRED-IN-PLACE
RLA	RATED LOAD AMPS
RO	REVERSE OSMOSIS
RPM	REVOLUTIONS PER MINUTE
RV	RELIEF VALVE
RW	RECLAIMED WATER
RWL	RAIN WATER LEADER
SAD	SUPPLY AIR DUCT
S.A.D.	SEE ARCHITECTURAL DRAWINGS
SAG	SUPPLY AIR GRILLE
SA(T)	SUPPLY AIR (TEMPERATURE)
SCBA	SELF-CONTAINED BREATHING APPARATUS
S.C.D.	SEE CIVIL DRAWINGS
SCHW(R)(S)(T)	SECONDARY CHW (RETURN)(SUPPLY)(TEMPERATURE)
SCHWP	SECONDARY CHW PUMP
SD	STORM DRAIN
SDCO	STORM DRAIN CLEAN-OUT
S.E.D.	SEE ELECTRICAL DRAWINGS
SEER	SEASONAL ENERGY EFFICIENCY RATIO
SENS	SENSIBLE
SF	SUPPLY FAN
SHHW(R)(S)(T)	SECONDARY HEATING HOT WATER (RETURN)(SUPPLY) (TEMPERATURE)
SIM.	SIMILAR
S.L.D.	SEE LANDSCAPE DRAWINGS
SM	SHEET METAL
SMD	SMOKE DAMPER
SOVL	SOLENOID VALVE
SP	STATIC PRESSURE
SPD	SPEED
S.P.D.	SEE PLUMBING DRAWINGS
SPECS	SPECIFICATIONS
SRV	SAFETY RELIEF VALVE
SS	SANITARY SEWER
S/S	START/STOP
S.S.D.	SEE STRUCTURAL DRAWINGS
SST	STAINLESS STEEL
ST	SOUND TRAP
STD	STANDARD
STM	STEAM
STRUCT	STRUCTURAL
STS	STATUS
SW	SWITCH
SXR	SQUARE TO ROUND TRANSITION
T	THERMOSTAT OR TEMPERATURE SENSOR (DDC)
TBA	TO BE ABANDONED
TBR	TO BE REMOVED
TCHW(R)(S)(T)	TERTIARY CHW (RETURN)(SUPPLY)(TEMPERATURE)
TCHWP	TERTIARY CHW PUMP
TCP	TEMPERATURE CONTROL PANEL
TDH	TOTAL DYNAMIC HEAD
TDV	TRIPLE DUTY VALVE
TEMP	TEMPERATURE
TG	TRANSFER AIR GRILLE
T&G	TONGUE & GROOVE
TH	THERMOMETER
TI	TEMPERATURE INDICATOR
TOD	TOP OF DUCT
TP	TEST PLUG (PETE'S PLUG)
TR	THROUGH ROOF
TRANS	TRANSITION
TS	TEMPERATURE SENSOR
TSP	TOTAL STATIC PRESSURE (IN.W.G.)
TUC	TERMINAL UNIT CONTROLLER
TYP	TYPICAL
UH	UNIT HEATER
U.O.N.	UNLESS OTHERWISE NOTED
V OR VT	VENT
VAC	VACUUM
VAV	VARIABLE AIR VOLUME
VB	VACCUM BREAKER
VFD	VARIABLE FREQUENCY DRIVE
VSD	VARIABLE SPEED DRIVE
VI	VIBRATION ISOLATOR
V.I.F.	VERIFY IN FIELD
VR	VENT RISER
VTR	VENT THROUGH ROOF
W	WASTE
W/	WITH
WB	WET BULB
WC	WATER COLUMN
WP	WEATHER PROOF
WPD	WATER PRESSURE DROP (FT WATER)
WT	WEIGHT
XFMR	TRANSFORMER
XMTR	TRANSMITTER

SALAS O'BRIEN
expect a difference
3700 South Susan Street, Ste 150
Santa Ana, California 92704
949.517.4900 | 408.297.2995 (f)
salasobrien.com
California | Georgia | Louisiana
Montana | Texas | Washington
Licensed in 50 States

REGISTERED PROFESSIONAL ENGINEER — JAMES ZWINGMAN — No. M35588 — MECHANICAL — STATE OF CALIFORNIA

SAN BERNARDINO COUNTY

800MHZ UPGRADES - CAJON PASS TOWER

WBSE #10.10.1011
CIP #20-225

ISSUE

MARK	DATE	DESCRIPTION
	12/23/21	95% CD
	12/16/22	100% CD

SOBE PROJECT NO:	2002862
DATE:	12/16/22
DRAWN BY:	TP
CHECKED BY:	AC
APPROVED BY:	AC

SHEET TITLE
MECHANICAL SYMBOLS & ABBREVIATIONS

SCALE: AS NOTED
THIS DRAWING IS 30" X 42" AT FULL SIZE

M-0.0

THIS DRAWING IS 30" X 42" AT FULL SIZE, 15" X 21" AT HALF SIZE. © 2015 BY SALAS O'BRIEN ENGINEERS, INC.

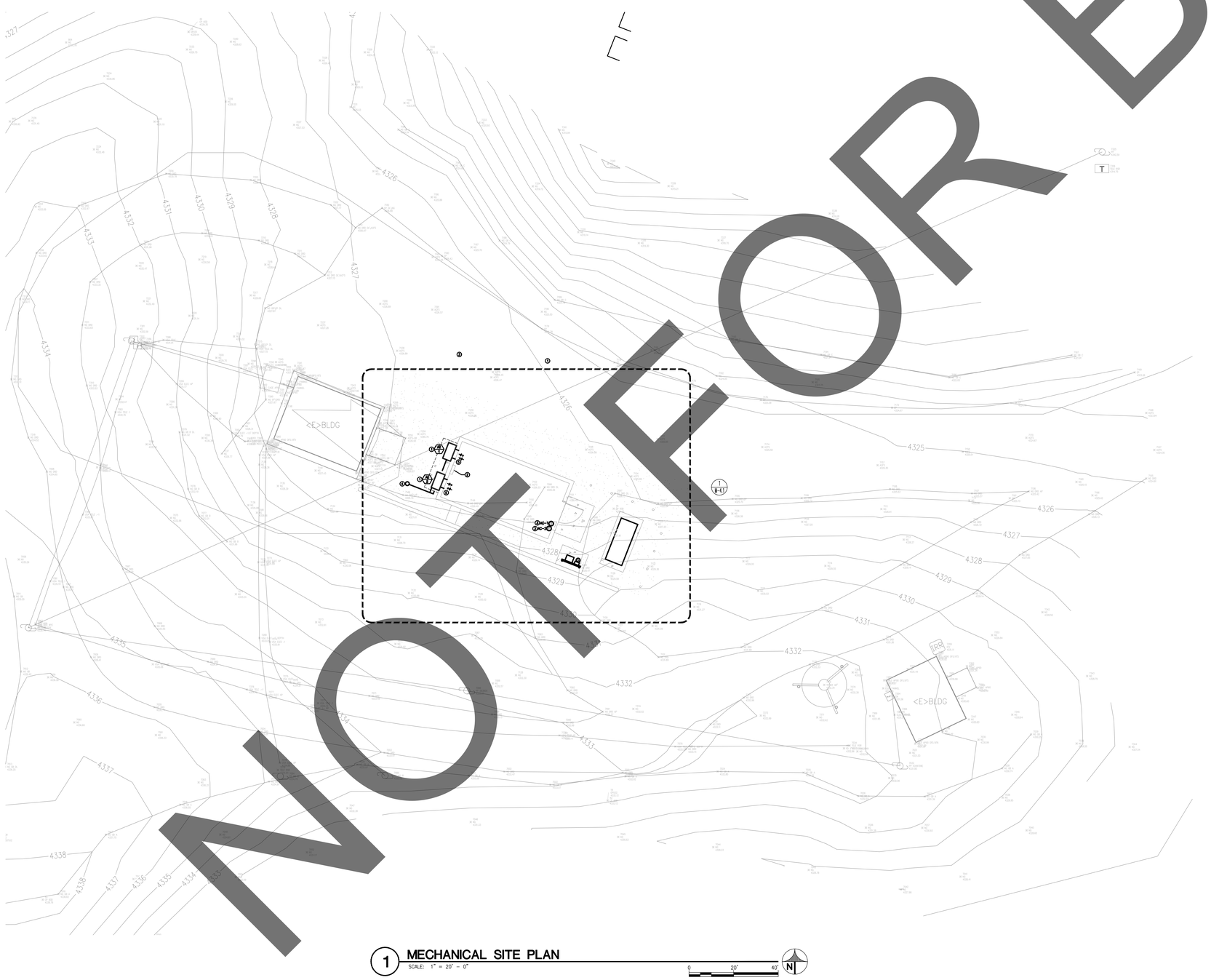

1 MECHANICAL SITE PLAN
SCALE: 1" = 20' - 0"

0 20' 40' N

NOT FOR BID

GENERAL SHEET NOTES

A. –

REFERENCE SHEET NOTES

1. SEE ENLARGED PLAN ON M-4.1

SALASO'BRIEN
expect a difference
3700 South Susan Street, Ste 150
Santa Ana, California 92704
949.517.4900 | 408.297.2995 (f)
salasobrien.com
California | Georgia | Louisiana
Montana | Texas | Washington
Licensed in 50 States

REGISTERED PROFESSIONAL ENGINEER
JAMES ZWIERZAK
No. M30669
MECHANICAL
STATE OF CALIFORNIA

SAN BERNARDINO COUNTY

800MHZ UPGRADES -
CAJON PASS TOWER

WBSE #10.10.1011
CIP #20-225

ISSUE

MARK	DATE	DESCRIPTION
	12/23/21	95% CD
	12/16/22	100% CD

SOBE PROJECT NO:	2002862
DATE:	12/16/22
DRAWN BY:	TP
CHECKED BY:	AC
APPROVED BY:	AC

SHEET TITLE

MECHANICAL
BOILER ROOM
FLOOR PLANS

SCALE: AS NOTED
THIS DRAWING IS 30" X 42" AT FULL SIZE

M-1.1

THIS DRAWING IS 30" X 42" AT FULL SIZE, 15" X 21" AT HALF SIZE. © 2015 BY SALAS O'BRIEN ENGINEERS, INC.

1 MECHANICAL ENLARGED SITE PLAN
SCALE: 1/4" = 1' - 0"

0 4' 8'

N

NOT FOR BID

GENERAL SHEET NOTES

REFERENCE SHEET NOTES

1. FURNISH AND INSTALL WALL MOUNTED AIR CONDITIONING UNITS WITH ELECTRIC HEATING PER DETAIL 2/M-5.1 AND STRUCTURAL DETAILS. INSTALL WITH SECURITY CAGE AROUND EQUIPMENT PER 7/A-5.1.
2. F&I LEAD-LAG CONTROL PANEL ON WALL. SEE ELECTRICAL DRAWINGS FOR POWER REQUIREMENTS.
3. F&I WALL MOUNTED THERMOSTATS (+48"AFF) AND CONNECT TO LEAD-LAG CONTROLLER.
4. F&I HVAC CONDENSATE CONNECTED TO DRYWELL PER DETAILS 1/M-5.1 AND 3/M-5.1.
5. SHEET METAL DUCT THRU WALL WITH SUPPLY AND RETURN GRILLES. SUPPLY GRILLES: KRUEGER AF80 WITH VERTICAL FRONT BLADES, SIZE 30"X10". RETURN GRILLES: KRUEGER S80 WITH 35 DEGREE DEFLECTION, SIZE 30"X16".

SALASO'BRIEN
expect a difference
3700 South Susan Street, Ste 150
Santa Ana, California 92704
949.517.4900 | 408.297.2995 (f)
salasobrien.com
California | Georgia | Louisiana
Montana | Texas | Washington
Licensed in 50 States

REGISTERED PROFESSIONAL ENGINEER
JAMES ZWINGER
No. M30660
MECHANICAL
STATE OF CALIFORNIA

SAN BERNARDINO COUNTY

800MHZ UPGRADES - CAJON PASS TOWER

WBSE #10.10.1011
CIP #20-225

ISSUE		
MARK	DATE	DESCRIPTION
	12/23/21	95% CD
	12/16/22	100% CD

SOBE PROJECT NO:	2002862
DATE:	12/16/22
DRAWN BY:	TP
CHECKED BY:	AC
APPROVED BY:	AC

SHEET TITLE
MECHANICAL
ENLARGED SITE PLAN

SCALE: AS NOTED
THIS DRAWING IS 30" X 42" AT FULL SIZE

M-4.1

THIS DRAWING IS 30" X 42" AT FULL SIZE, 15" X 21" AT HALF SIZE. © 2015 BY SALAS O'BRIEN ENGINEERS, INC.

NOT FOR BID

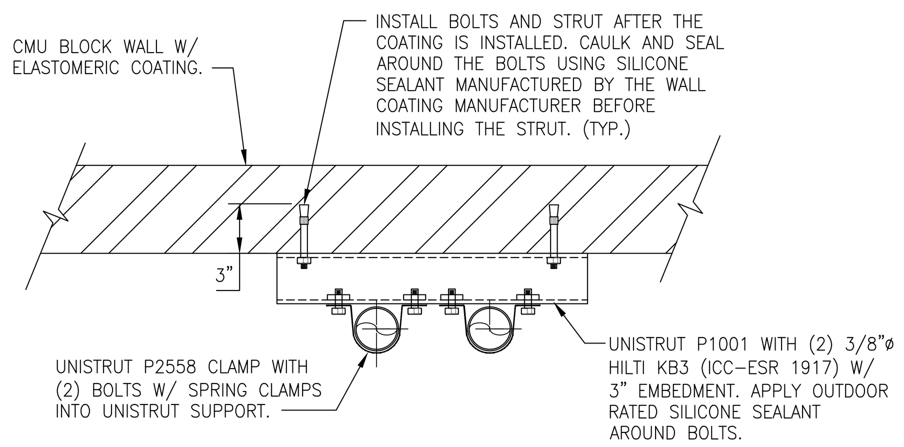

4 PIPE CLAMP DETAIL

SCALE: N.T.S.

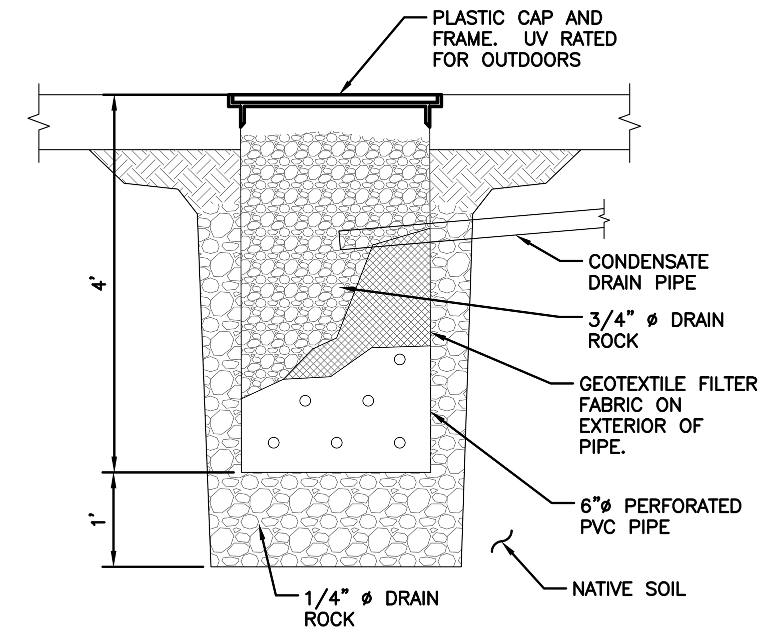

3 DRYWELL DETAIL

SCALE: N.T.S.

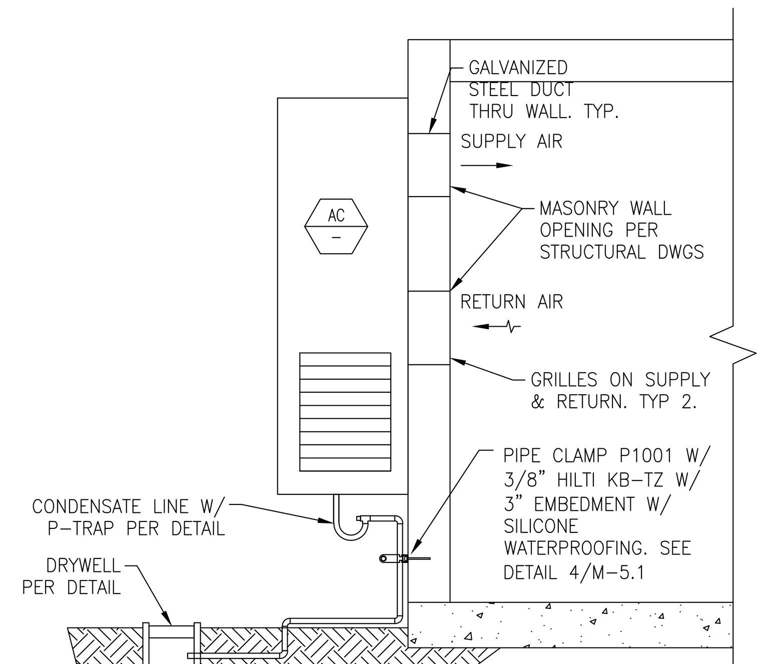

2 WALL MOUNTED HVAC EQUIPMENT DETAIL

SCALE: N.T.S.

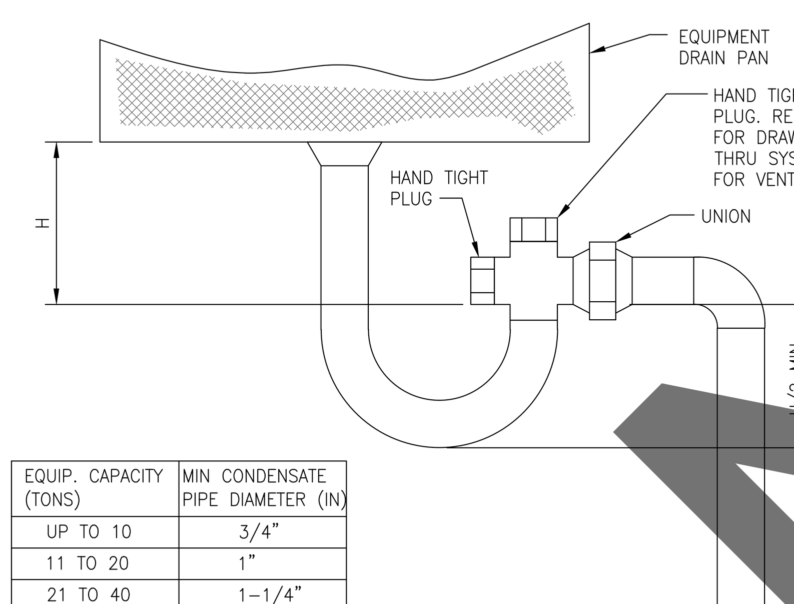

EQUIP. CAPACITY (TONS)	MIN CONDENSATE PIPE DIAMETER (IN)
UP TO 10	3/4"
11 TO 20	1"
21 TO 40	1-1/4"
41 TO 90	1-1/2"

NOTES:
1. H = FAN INLET STATIC + 1"
2. INSULATE CONDENSATE DRAIN LINES IN ATTIC SPACE, ABOVE DROP CEILINGS AND CONCEALED SPACES. USE 1" THICK INSULATION WITH ASJ.

1 CONDENSATE DRAIN DETAIL

SCALE: N.T.S.

SCHEDULES

WALL MOUNTED PACKAGED AIR CONDITIONING UNIT SCHEDULE

MARK	ROOMS SERVED	MAKE	MODEL	NOM. TONS	SUPPLY CFM	SUPPLY FAN MOTOR (HP)	MIN OA CFM	ESP (IN. WG)	COOLING				HEATING		REFRIG.	VOLT/PH/ HERTZ	MCA (AMPS)	MOCP (AMPS)	FILTER	EER / SEER	OPER. WEIGHT (LBS)	NOTES
									AMBIENT AIR TEMP (DEG F)	RETURN TEMP (DEG DW/WB)	TOTAL COOL CAP. (BTU/HR)	SENS. BTU/HR	TOTAL BTU/HR	ELECT. REHEAT (KW)								
AC-1	TELECOM BUILDING	BARD OR EQUAL	WR58BPA05	5	1,800	0.75	0	0.15	95	80/67	58,000	41,100	17,000	5	R-410A	230/1/60	43	60	2" THICK MERV 8	11.3 / NA	600	1, 2, 3, 4, 5, 6, 7
AC-2	TELECOM BUILDING	BARD OR EQUAL	WR58BPA05	5	1,800	0.75	0	0.15	95	80/67	58,000	41,100	17,000	5	R-410A	230/1/60	43	60	2" THICK MERV 8	11.3 / NA	600	1, 2, 3, 4, 5, 6, 7

NOTES:
1) ECM INDOOR BLOWER MOTOR
2) 2 STAGE SCROLL COMPRESSOR
3) FOIL FACED INSULATION
4) DIRTY FILTER SWITCH AND REPLACEMENT LIGHT
5) ECONOMIZER WITH POWER EXHAUST & AIR INTAKE QUALITY DUST SENSOR
6) INSTALL WITH LC6000 CONTROLLER TO OPERATE LEAD-LAG FUNCTIONS, TEMPERATURE SETPOINTS, ALARMS OF UNIT.
7) SECURITY CAGE AROUND EQUIPMENT WITH TAMPER PROOF LOCKS PER ARCHITECTURAL DETAILS.

SPECIFICATIONS

SECTION 23 31 00

HVAC DUCTS AND CASINGS

PART 1 GENERAL

1.1 SECTION INCLUDES
A. METAL DUCTWORK.

1.1 REFERENCE STANDARDS
A. ASTM A36/A36M - STANDARD SPECIFICATION FOR CARBON STRUCTURAL STEEL; 2014.
B. ASTM A653/A653M - STANDARD SPECIFICATION FOR STEEL SHEET, ZINC-COATED (GALVANIZED) OR ZINC-IRON ALLOY-COATED (GALVANNEALED) BY THE HOT-DIP PROCESS; 2015.
C. ASTM A1008/A1008M - STANDARD SPECIFICATION FOR STEEL, SHEET, COLD-ROLLED, CARBON, STRUCTURAL, HIGH-STRENGTH LOW-ALLOY, HIGH-STRENGTH LOW-ALLOY WITH IMPROVED FORMABILITY, SOLUTION HARDENED, AND BAKE HARDENABLE; 2015.
D. ASTM A1011/A1011M - STANDARD SPECIFICATION FOR STEEL, SHEET AND STRIP, HOT-ROLLED, CARBON, STRUCTURAL, HIGH-STRENGTH LOW-ALLOY, HIGH-STRENGTH LOW-ALLOY WITH IMPROVED FORMABILITY, AND ULTRA-HIGH STRENGTH; 2014.
E. NFPA 90A - STANDARD FOR THE INSTALLATION OF AIR-CONDITIONING AND VENTILATING SYSTEMS; 2015.
F. NFPA 90B - STANDARD FOR THE INSTALLATION OF WARM AIR HEATING AND AIR-CONDITIONING SYSTEMS; 2015.
G. SMACNA (DCS) - HVAC DUCT CONSTRUCTION STANDARDS METAL AND FLEXIBLE; 2005.
H. SMACNA (LEAK) - HVAC AIR DUCT LEAKAGE TEST MANUAL; 2012, 2ND EDITION.
I. SMACNA GUIDELINES FOR SEISMIC RESTRAINTS OF MECHANICAL SYSTEMS

1.2 SUBMITTALS
A. SEE DIVISION 1 FOR SUBMITTAL PROCEDURES.
B. PRODUCT DATA: PROVIDE DATA FOR DUCT MATERIALS.
C. PROJECT RECORD DOCUMENTS: RECORD ACTUAL LOCATIONS OF DUCTS AND DUCT FITTINGS. RECORD CHANGES IN FITTING LOCATION AND TYPE. SHOW ADDITIONAL FITTINGS USED.

1.3 QUALITY ASSURANCE
A. INSTALLER QUALIFICATIONS: COMPANY SPECIALIZING IN PERFORMING THE TYPE OF WORK SPECIFIED IN THIS SECTION, WITH MINIMUM THREE YEARS OF DOCUMENTED EXPERIENCE.

PART 2 PRODUCTS

2.1 DUCT ASSEMBLIES
A. REGULATORY REQUIREMENTS: CONSTRUCT DUCTWORK TO NFPA 90A STANDARDS.

2.2 MATERIALS
A. GALVANIZED STEEL FOR DUCTS: HOT-DIPPED GALVANIZED STEEL SHEET, ASTM A653/A653M FS TYPE B, WITH G60/Z180 COATING.

2.3 DUCTWORK FABRICATION
A. FABRICATE AND SUPPORT IN ACCORDANCE WITH SMACNA (DCS) AND AS INDICATED.
B. PROVIDE DUCT MATERIAL, GAGES, REINFORCING, AND SEALING FOR OPERATING PRESSURES INDICATED.
C. CONSTRUCT T'S, BENDS, AND ELBOWS WITH RADIUS OF NOT LESS THAN 1-1/2 TIMES WIDTH OF DUCT ON CENTERLINE. WHERE NOT POSSIBLE AND WHERE RECTANGULAR ELBOWS MUST BE USED, PROVIDE AIR FOIL TURNING VANES OF PERFORATED METAL WITH GLASS FIBER INSULATION.
D. INCREASE DUCT SIZES GRADUALLY, NOT EXCEEDING 15 DEGREES DIVERGENCE WHEREVER POSSIBLE; MAXIMUM 30 DEGREES DIVERGENCE UPSTREAM OF EQUIPMENT AND 45 DEGREES CONVERGENCE DOWNSTREAM.
E. FABRICATE CONTINUOUSLY WELDED ROUND AND OVAL DUCT FITTINGS IN ACCORDANCE WITH SMACNA (DCS).

2.4 MANUFACTURED DUCTWORK AND FITTINGS
A. FLEXIBLE DUCTS: UL 181, CLASS 1, ALUMINUM LAMINATE AND POLYESTER FILM WITH LATEX ADHESIVE SUPPORTED BY HELICALLY WOUND SPRING STEEL WIRE.
1. PRESSURE RATING: 10 INCHES WG POSITIVE AND 1.0 INCHES WG NEGATIVE.
2. MAXIMUM VELOCITY: 4000 FPM.
3. TEMPERATURE RANGE: MINUS 20 DEGREES F TO 210 DEGREES F.

PART 3 EXECUTION

3.1 INSTALLATION
A. INSTALL, SUPPORT, AND SEAL DUCTS IN ACCORDANCE WITH SMACNA (DCS).
B. INSTALL IN ACCORDANCE WITH MANUFACTURER'S INSTRUCTIONS.
C. DURING CONSTRUCTION PROVIDE TEMPORARY CLOSURES OF METAL OR TAPED POLYETHYLENE ON OPEN DUCTWORK TO PREVENT CONSTRUCTION DUST FROM ENTERING DUCTWORK SYSTEM.
D. FLEXIBLE DUCTS: CONNECT TO METAL DUCTS WITH ADHESIVE PLUS SHEET METAL SCREWS.
E. DUCT SIZES INDICATED ARE INSIDE CLEAR DIMENSIONS. FOR LINED DUCTS, MAINTAIN SIZES INSIDE LINING.
F. LOCATE DUCTS WITH SUFFICIENT SPACE AROUND EQUIPMENT TO ALLOW NORMAL OPERATING AND MAINTENANCE ACTIVITIES.
G. INSTALL DUCTWORK IN ACCORDANCE WITH SMACNA GUIDELINES FOR SEISMIC RESTRAINTS OF MECHANICAL SYSTEMS.

SECTION 23 33 00

DUCT ACCESSORIES

PART 1 GENERAL

1.1 SECTION INCLUDES
A. AIR TURNING DEVICES/EXTRACTORS.
B. BACKDRAFT DAMPERS - METAL.

SECTION 23 33 00 DUCT ACCESSORIES
C. DUCT ACCESS DOORS.
D. FLEXIBLE DUCT CONNECTIONS.
E. VOLUME CONTROL DAMPERS.

1.2 REFERENCE STANDARDS
A. NFPA 90A - STANDARD FOR THE INSTALLATION OF AIR-CONDITIONING AND VENTILATING SYSTEMS; 2015.
B. NFPA 92 - STANDARD FOR SMOKE CONTROL SYSTEMS; 2015.
C. SMACNA (DCS) - HVAC DUCT CONSTRUCTION STANDARDS METAL AND FLEXIBLE; 2005.

1.3 SUBMITTALS
A. PRODUCT DATA: PROVIDE FOR SHOP FABRICATED ASSEMBLIES INCLUDING VOLUME CONTROL DAMPERS. INCLUDE ELECTRICAL CHARACTERISTICS AND CONNECTION REQUIREMENTS.

1.4 DELIVERY, STORAGE, AND HANDLING
A. PROTECT DAMPERS FROM DAMAGE TO OPERATING LINKAGES AND BLADES.

PART 2 PRODUCTS

2.1 AIR TURNING DEVICES/EXTRACTORS
A. TURNING VANES SHALL BE A TRUE AIRFOIL DESIGN; SMOOTHLY-ROUNDED ENTRY NOSE WITH EXTENDED TRAILING EDGE. GENERATED SOUND POWER LEVEL SHALL NOT EXCEED 54 DECIBELS IN BAND 4 AT 2,000 FPM, WITH A DUCT SIZE OF 24 X 24.
B. ASSEMBLIES SHALL BE FABRICATED WITH SIDE RAILS; VANES INSTALLED ON DESIGN CENTERS ACROSS THE FULL DIAGONAL DIMENSION OF THE ELBOW.

2.2 BACKDRAFT DAMPERS - METAL
A. MULTI-BLADE, PARALLEL ACTION GRAVITY BALANCED BACKDRAFT DAMPERS: EXTRUDED ALUMINUM, WITH CENTER PIVOTED BLADES OF MAXIMUM 6 INCH WIDTH, WITH FELT OR FLEXIBLE VINYL SEALED EDGES, LINKED TOGETHER IN RATTLE-FREE MANNER WITH 90 DEGREE STOP, STEEL BALL BEARINGS, AND PLATED STEEL PIVOT PIN; ADJUSTMENT DEVICE TO PERMIT SETTING FOR VARYING DIFFERENTIAL STATIC PRESSURE.

2.3 DUCT ACCESS DOORS
A. FABRICATION: RIGID AND CLOSE-FITTING OF GALVANIZED STEEL WITH SEALING GASKETS AND QUICK FASTENING LOCKING DEVICES. FOR INSULATED DUCTS, INSTALL MINIMUM 1 INCH THICK INSULATION WITH SHEET METAL COVER.
1. LESS THAN 12 INCHES SQUARE: SECURE WITH SASH LOCKS.
2. UP TO 18 INCHES SQUARE: PROVIDE TWO HINGES AND TWO SASH LOCKS.
B. ACCESS DOORS WITH SHEET METAL SCREW FASTENERS ARE NOT ACCEPTABLE.

2.4 FLEXIBLE DUCT CONNECTIONS
A. FABRICATE IN ACCORDANCE WITH SMACNA HVAC DUCT CONSTRUCTION STANDARDS.
B. FLEXIBLE DUCT CONNECTIONS: FABRIC CRIMPED INTO METAL EDGING STRIP.
1. METAL: 3 INCHES WIDE, 24 GAGE, 0.0239 INCH THICK GALVANIZED STEEL.

2.5 VOLUME CONTROL DAMPERS
A. MANUFACTURERS:
1. RUSKIN COMPANY, A BRAND OF JOHNSON CONTROLS: WWW.RUSKIN.COM.
2. GREENHECK: WWW.GREENHECK.COM.
B. MULTI-BLADE DAMPER: FABRICATE OF OPPOSED BLADE PATTERN WITH MAXIMUM BLADE SIZES 8 BY 72 INCH. ASSEMBLE CENTER AND EDGE CRIMPED BLADES IN PRIME COATED OR GALVANIZED CHANNEL FRAME WITH SUITABLE HARDWARE.
1. BLADE: 18 GAGE, 0.0478 INCH, MINIMUM.
C. QUADRANTS:
1. PROVIDE LOCKING, INDICATING QUADRANT REGULATORS ON SINGLE AND MULTI-BLADE DAMPERS.
2. ON INSULATED DUCTS MOUNT QUADRANT REGULATORS ON STAND-OFF MOUNTING BRACKETS, BASES, OR ADAPTERS.
3. WHERE ROD LENGTHS EXCEED 30 INCHES PROVIDE REGULATOR AT BOTH ENDS.

PART 3 EXECUTION

3.1 INSTALLATION
A. INSTALL ACCESSORIES IN ACCORDANCE WITH MANUFACTURER'S INSTRUCTIONS. REFER TO SECTION 23 31 00 FOR DUCT CONSTRUCTION AND PRESSURE CLASS.
B. PROVIDE BACKDRAFT DAMPERS ON EXHAUST FANS OR EXHAUST DUCTS NEAREST TO OUTSIDE AND WHERE INDICATED.
C. PROVIDE BALANCING DAMPERS ON DUCT TAKE-OFF TO DIFFUSERS, GRILLES, AND REGISTERS, REGARDLESS OF WHETHER DAMPERS ARE SPECIFIED AS PART OF THE DIFFUSER, GRILLE, OR REGISTER ASSEMBLY. DO NOT USE OPPOSED BLADE DAMPERS ON DIFFUSER-GRILLE FACES.

END OF SECTION

SECTION 23 07 13

DUCT INSULATION

PART 1 GENERAL

1.1 SECTION INCLUDES
A. DUCT INSULATION.

1.2 REFERENCE STANDARDS

SECTION 23 07 13 DUCT INSULATION
A. ASTM C518 - STANDARD TEST METHOD FOR STEADY-STATE THERMAL TRANSMISSION PROPERTIES BY MEANS OF THE HEAT FLOW METER APPARATUS; 2010.
B. ASTM C553 - STANDARD SPECIFICATION FOR MINERAL FIBER BLANKET THERMAL INSULATION FOR COMMERCIAL AND INDUSTRIAL APPLICATIONS; 2013.
C. ASTM C612 - STANDARD SPECIFICATION FOR MINERAL FIBER BLOCK AND BOARD THERMAL INSULATION; 2014.
D. ASTM E84 - STANDARD TEST METHOD FOR SURFACE BURNING CHARACTERISTICS OF BUILDING MATERIALS; 2015A.
E. NFPA 255 - STANDARD METHOD OF TEST OF SURFACE BURNING CHARACTERISTICS OF BUILDING MATERIALS; NATIONAL FIRE PROTECTION ASSOCIATION; 2006.
F. UL 723 - STANDARD FOR TEST FOR SURFACE BURNING CHARACTERISTICS OF BUILDING MATERIALS; CURRENT EDITION, INCLUDING ALL REVISIONS.

1.3 SUBMITTALS
A. SEE DIVISION 1 FOR SUBMITTAL REQUIREMENTS.
B. PRODUCT DATA: PROVIDE PRODUCT DESCRIPTION, THERMAL CHARACTERISTICS, LIST OF MATERIALS AND THICKNESS FOR EACH SERVICE, AND LOCATIONS.
C. MANUFACTURER'S INSTRUCTIONS: INDICATE INSTALLATION PROCEDURES NECESSARY TO ENSURE ACCEPTABLE WORKMANSHIP AND THAT INSTALLATION STANDARDS WILL BE ACHIEVED.

1.4 QUALITY ASSURANCE
A. MANUFACTURER QUALIFICATIONS: COMPANY SPECIALIZING IN MANUFACTURING PRODUCTS OF THE TYPE SPECIFIED IN THIS SECTION WITH NOT LESS THAN THREE YEARS OF DOCUMENTED EXPERIENCE.
B. APPLICATOR QUALIFICATIONS: COMPANY SPECIALIZING IN PERFORMING THE TYPE OF WORK SPECIFIED IN THIS SECTION, WITH MINIMUM THREE YEARS OF EXPERIENCE AND APPROVED BY MANUFACTURER.

1.5 DELIVERY, STORAGE, AND HANDLING
A. ACCEPT MATERIALS ON SITE IN ORIGINAL FACTORY PACKAGING, LABELLED WITH MANUFACTURER'S IDENTIFICATION, INCLUDING PRODUCT DENSITY AND THICKNESS.
B. PROTECT INSULATION FROM WEATHER AND CONSTRUCTION TRAFFIC, DIRT, WATER, CHEMICAL, AND MECHANICAL DAMAGE, BY STORING IN ORIGINAL WRAPPING.

1.6 FIELD CONDITIONS
A. MAINTAIN AMBIENT TEMPERATURES AND CONDITIONS REQUIRED BY MANUFACTURERS OF ADHESIVES, MASTICS, AND INSULATION CEMENTS.
B. MAINTAIN TEMPERATURE DURING AND AFTER INSTALLATION FOR MINIMUM PERIOD OF 24 HOURS.

PART 2 PRODUCTS

2.1 REGULATORY REQUIREMENTS
A. SURFACE BURNING CHARACTERISTICS: FLAME SPREAD INDEX/SMOKE DEVELOPED INDEX OF 25/50, MAXIMUM, WHEN TESTED IN ACCORDANCE WITH ASTM E84 OR UL 723.

2.2 GLASS FIBER, FLEXIBLE
A. INSULATION: ASTM C553; FLEXIBLE, NONCOMBUSTIBLE BLANKET.
1. 'K' VALUE: 0.31 AT 75 DEGREES F, WHEN TESTED IN ACCORDANCE WITH ASTM C518.
2. MAXIMUM WATER VAPOR ABSORPTION: 5.0 PERCENT BY WEIGHT.
3. INSTALLED ON EXTERIOR OF DUCT. DUCT LINING NOT ALLOWED.
B. VAPOR BARRIER JACKET:
1. KRAFT PAPER WITH GLASS FIBER YARN AND BONDED TO ALUMINIZED FILM.
2. SECURE WITH PRESSURE SENSITIVE TAPE.
C. VAPOR BARRIER TAPE:
1. KRAFT PAPER REINFORCED WITH GLASS FIBER YARN AND BONDED TO ALUMINIZED FILM, WITH PRESSURE SENSITIVE RUBBER BASED ADHESIVE.

2.3 GLASS FIBER, RIGID
A. INSULATION: ASTM C612; RIGID, NONCOMBUSTIBLE BLANKET.
1. 'K' VALUE: 0.24 AT 75 DEGREES F, WHEN TESTED IN ACCORDANCE WITH ASTM C518.
2. MAXIMUM SERVICE TEMPERATURE: 450 DEGREES F.
3. MAXIMUM WATER VAPOR ABSORPTION: 5.0 PERCENT.
4. MINIMUM NOISE REDUCTION CRITERIA: PER ASTM C423 0.7 FOR 1 INCH THICKNESS.
5. INSTALLED ON EXTERIOR OF DUCT. DUCT LINING NOT ALLOWED.
B. VAPOR BARRIER JACKET:
1. KRAFT PAPER WITH GLASS FIBER YARN AND BONDED TO ALUMINIZED FILM.
2. SECURE WITH PRESSURE SENSITIVE TAPE.

2.4 CELLULAR FOAM DUCT LINER, FLEXIBLE
A. MANUFACTURER: ARMSTRONG MODEL AP ARMAFLEX SA.
B. INSULATION: FLEXIBLE ELASTOMERIC THERMAL INSULATION, CELLULAR FOAM, SELF-ADHESIVE
1. 'K' VALUE: ASTM C 1071 OR ASTM C 518, MAXIMUM 0.27 AT 75 DEGREES F.
2. MAXIMUM SERVICE TEMPERATURE: 180 DEGREES F.
3. MAXIMUM VELOCITY ON COATED AIR SIDE: 4000 FPM.
4. MINIMUM NOISE REDUCTION CRITERIA: ASTM C423 0.3 FOR 1 INCH THICKNESS.
5. INSTALLED ON EXTERIOR OF DUCT. DUCT LINING NOT ALLOWED.
6. INSTALL WITH ALUMINUM VAPOR BARRIER.

PART 3 EXECUTION

3.1 EXAMINATION
A. VERIFY THAT DUCTS HAVE BEEN TESTED BEFORE APPLYING INSULATION MATERIALS.
B. VERIFY THAT SURFACES ARE CLEAN, FOREIGN MATERIAL REMOVED, AND DRY.

3.2 INSTALLATION
A. INSTALL IN ACCORDANCE WITH MANUFACTURER'S INSTRUCTIONS.
B. INSTALL IN ACCORDANCE WITH NAIMA NATIONAL INSULATION STANDARDS.
C. INSULATED DUCTS CONVEYING AIR BELOW AMBIENT TEMPERATURE:
1. PROVIDE INSULATION WITH VAPOR BARRIER JACKETS.
2. CONTINUE INSULATION THROUGH WALLS, SLEEVES, HANGERS, AND OTHER DUCT PENETRATIONS.
3. INSULATE ENTIRE SYSTEM INCLUDING FITTINGS, JOINTS, FLANGES, FIRE DAMPERS, FLEXIBLE CONNECTIONS, AND EXPANSION JOINTS.
D. INSULATED DUCTS CONVEYING AIR ABOVE AMBIENT TEMPERATURE:
1. PROVIDE WITH OR WITHOUT STANDARD VAPOR BARRIER JACKET.
2. INSULATE FITTINGS AND JOINTS. WHERE SERVICE ACCESS IS REQUIRED, BEVEL AND SEAL ENDS OF INSULATION.
E. EXTERNAL DUCT INSULATION APPLICATION:
1. SECURE INSULATION WITH VAPOR BARRIER WITH WIRES AND SEAL JACKET JOINTS WITH VAPOR BARRIER ADHESIVE OR TAPE TO MATCH JACKET.
2. INSTALL WITHOUT SAG ON UNDERSIDE OF DUCT. USE ADHESIVE OR MECHANICAL FASTENERS WHERE NECESSARY TO PREVENT SAGGING. LIFT DUCT OFF TRAPEZE HANGERS AND INSERT SPACERS.
3. SEAL VAPOR BARRIER PENETRATIONS BY MECHANICAL FASTENERS WITH VAPOR BARRIER ADHESIVE.
4. STOP AND POINT INSULATION AROUND ACCESS DOORS AND DAMPER OPERATORS TO ALLOW OPERATION WITHOUT DISTURBING WRAPPING.

3.3 SCHEDULES
A. REQUIRED THICKNESS: INSULATION THICKNESS SHALL BE SELECTED TO PROVIDE THE FOLLOWING R-VALUES:
1. DUCTS ON EXTERIOR OF BUILDING OR OTHER UNCONDITIONED SPACES: R-8
a. FOR MAXIMUM K-VALUES AS SPECIFIED HEREIN:
1) GLASS FIBER, FLEXIBLE: K = 0.31; MINIMUM THICKNESS = 3"
2) GLASS FIBER, RIGID: K = 0.25; MINIMUM THICKNESS = 2"
2. DUCTS INTERIOR TO BUILDING, NOT IN A DIRECTLY CONDITIONED SPACE: R-4.2
a. FOR MAXIMUM K-VALUES AS SPECIFIED HEREIN:
1) GLASS FIBER, FLEXIBLE: K = 0.29; MINIMUM THICKNESS = 1-1/2"
2) GLASS FIBER, RIGID: K = 0.24; MINIMUM THICKNESS = 1"
B. INSULATION TYPES BY LOCATION:
1. EXTERIOR DUCTS: DOUBLE WALLED DUCT WITH STEEL INTERIOR, FLEXIBLE DUCT LINER MIDDLE WITH STEEL EXTERIOR. NO LINING SHALL BE EXPOSED TO CONDITIONED AIR.
2. INTERIOR DUCTS - NOT IN CONDITIONED SPACE: PROVIDE GLASS FIBER FLEXIBLE WRAP ON EXTERIOR OF DUCTWORK .
3. INTERIOR DUCTS - NOT IN CONDITIONED SPACE: PROVIDE GLASS FIBER RIGID BOARD ON EXTERIOR OF DUCTWORK .

END OF SECTION

PART 3 EXECUTION

3.1 GENERAL REQUIREMENTS
A. PERFORM TOTAL SYSTEM BALANCE IN ACCORDANCE WITH ONE OF THE FOLLOWING:
1. AABC (NSTSB), AABC NATIONAL STANDARDS FOR TOTAL SYSTEM BALANCE.
2. ASHRAE STD 111, PRACTICES FOR MEASUREMENT, TESTING, ADJUSTING AND BALANCING OF BUILDING HEATING, VENTILATION, AIR-CONDITIONING, AND REFRIGERATION SYSTEMS.
3. NEBB PROCEDURAL STANDARDS FOR TESTING ADJUSTING BALANCING OF ENVIRONMENTAL SYSTEMS.
4. SMACNA (TAB).
5. MAINTAIN AT LEAST ONE COPY OF THE STANDARD TO BE USED AT PROJECT SITE AT ALL TIMES.
B. BEGIN WORK AFTER COMPLETION OF SYSTEMS TO BE TESTED, ADJUSTED, OR BALANCED AND COMPLETE WORK PRIOR TO SUBSTANTIAL COMPLETION OF THE PROJECT.
C. TAB AGENCY QUALIFICATIONS:
1. COMPANY SPECIALIZING IN THE TESTING, ADJUSTING, AND BALANCING OF SYSTEMS SPECIFIED IN THIS SECTION.

3.2 EXAMINATION
A. VERIFY THAT SYSTEMS ARE COMPLETE AND OPERABLE BEFORE COMMENCING WORK. ENSURE THE FOLLOWING CONDITIONS:
1. SYSTEMS ARE STARTED AND OPERATING IN A SAFE AND NORMAL CONDITION.
2. TEMPERATURE CONTROL SYSTEMS ARE INSTALLED COMPLETE AND OPERABLE.
3. PROPER THERMAL OVERLOAD PROTECTION IS IN PLACE FOR ELECTRICAL EQUIPMENT.
4. FINAL FILTERS ARE CLEAN AND IN PLACE. IF REQUIRED, INSTALL TEMPORARY MEDIA IN ADDITION TO FINAL FILTERS.
5. DUCT SYSTEMS ARE CLEAN OF DEBRIS.
6. FANS ARE ROTATING CORRECTLY.
7. FIRE AND VOLUME DAMPERS ARE IN PLACE AND OPEN.
8. AIR COIL FINS ARE CLEANED AND COMBED.
9. ACCESS DOORS ARE CLOSED AND DUCT END CAPS ARE IN PLACE.
10. AIR OUTLETS ARE INSTALLED AND CONNECTED.
11. DUCT SYSTEM LEAKAGE IS MINIMIZED.
12. HYDRONIC SYSTEMS ARE FLUSHED, FILLED, AND VENTED.
13. SERVICE AND BALANCE VALVES ARE OPEN.
B. SUBMIT FIELD REPORTS. REPORT DEFECTS AND DEFICIENCIES THAT WILL OR COULD PREVENT PROPER SYSTEM BALANCE.
C. BEGINNING OF WORK MEANS ACCEPTANCE OF EXISTING CONDITIONS.

3.3 PREPARATION
A. HOLD A PRE-BALANCING MEETING AT LEAST ONE WEEK PRIOR TO STARTING TAB WORK.

3.4 ADJUSTMENT TOLERANCES
A. AIR HANDLING SYSTEMS: ADJUST TO WITHIN PLUS OR MINUS 5 PERCENT OF DESIGN FOR SUPPLY SYSTEMS AND PLUS OR MINUS 10 PERCENT OF DESIGN FOR RETURN AND EXHAUST SYSTEMS.
B. WAIR OUTLETS AND INLETS: ADJUST TOTAL TO WITHIN PLUS 10 PERCENT AND MINUS 5 PERCENT OF DESIGN TO SPACE. ADJUST OUTLETS AND INLETS IN SPACE TO WITHIN PLUS OR MINUS 10 PERCENT OF DESIGN.

3.5 RECORDING AND ADJUSTING
A. ENSURE RECORDED DATA REPRESENTS ACTUAL MEASURED OR OBSERVED CONDITIONS.
B. PERMANENTLY MARK SETTINGS OF VALVES, DAMPERS, AND OTHER ADJUSTMENT DEVICES ALLOWING SETTINGS TO BE RESTORED. SET AND LOCK MEMORY STOPS.
C. AFTER ADJUSTMENT, TAKE MEASUREMENTS TO VERIFY BALANCE HAS NOT BEEN DISRUPTED OR THAT SUCH DISRUPTION HAS BEEN RECTIFIED.
D. LEAVE SYSTEMS IN PROPER WORKING ORDER, REPLACING BELT GUARDS, CLOSING ACCESS DOORS, CLOSING DOORS TO ELECTRICAL SWITCH BOXES, AND RESTORING THERMOSTATS TO SPECIFIED SETTINGS.

3.6 AIR SYSTEM PROCEDURE
A. ADJUST AIR HANDLING AND DISTRIBUTION SYSTEMS TO PROVIDE REQUIRED OR DESIGN SUPPLY, RETURN, AND EXHAUST AIR QUANTITIES AT SITE ALTITUDE.
B. MAKE AIR QUANTITY MEASUREMENTS IN DUCTS BY PITOT TUBE TRAVERSE OF ENTIRE CROSS SECTIONAL AREA OF DUCT.
C. MEASURE AIR QUANTITIES AT AIR INLETS AND OUTLETS.
D. ADJUST DISTRIBUTION SYSTEM TO OBTAIN UNIFORM SPACE TEMPERATURES FREE FROM OBJECTIONABLE DRAFTS AND NOISE.
E. USE VOLUME CONTROL DEVICES TO REGULATE AIR QUANTITIES ONLY TO EXTEND THAT ADJUSTMENTS DO NOT CREATE OBJECTIONABLE AIR MOTION OR SOUND LEVELS. EFFECT VOLUME CONTROL BY DUCT INTERNAL DEVICES SUCH AS DAMPERS AND SPLITTERS.
F. VARY TOTAL SYSTEM AIR QUANTITIES BY ADJUSTMENT OF FAN SPEEDS. PROVIDE DRIVE CHANGES REQUIRED, INCLUDING SHEAVES AND LABOR. VARY BRANCH AIR QUANTITIES BY DAMPER REGULATION.
G. PROVIDE SYSTEM SCHEMATIC WITH REQUIRED AND ACTUAL AIR QUANTITIES RECORDED AT EACH OUTLET OR INLET.
H. MEASURE STATIC AIR PRESSURE CONDITIONS ON AIR SUPPLY UNITS, INCLUDING FILTER AND COIL PRESSURE DROPS, AND TOTAL PRESSURE ACROSS THE FAN. MAKE ALLOWANCES FOR 50 PERCENT LOADING OF FILTERS.
I. ADJUST OUTSIDE AIR AUTOMATIC DAMPERS, OUTSIDE AIR, RETURN AIR, AND EXHAUST DAMPERS FOR DESIGN CONDITIONS.
J. MEASURE TEMPERATURE CONDITIONS ACROSS OUTSIDE AIR, RETURN AIR, AND EXHAUST DAMPERS TO CHECK LEAKAGE.
K. WHERE MODULATING DAMPERS ARE PROVIDED, TAKE MEASUREMENTS AND BALANCE AT EXTREME CONDITIONS. BALANCE VARIABLE VOLUME SYSTEMS AT MAXIMUM AIR FLOW RATE, FULL COOLING, AND AT MINIMUM AIR FLOW RATE, FULL HEATING.
L. MEASURE BUILDING STATIC PRESSURE AND ADJUST SUPPLY, RETURN, AND EXHAUST AIR SYSTEMS TO PROVIDE REQUIRED RELATIONSHIP BETWEEN EACH TO MAINTAIN APPROXIMATELY 0.05 INCHES POSITIVE STATIC PRESSURE NEAR THE BUILDING ENTRIES.

3.7 SCOPE
A. TEST, ADJUST, AND BALANCE THE FOLLOWING:
1. PACKAGED HEATING/COOLING UNITS; FANS; AIR INLETS AND OUTLETS.

3.8 MINIMUM DATA TO BE REPORTED
A. ELECTRIC MOTORS:
1. MANUFACTURER; MODEL/FRAME; HP/BHP; PHASE, VOLTAGE, AMPERAGE; NAMEPLATE, ACTUAL, NO LOAD; RPM; SERVICE FACTOR; START SIZE, RATING, HEATER ELEMENTS; SHEAVE MAKE/SIZE/BORE.
B. V-BELT DRIVES:
1. IDENTIFICATION/LOCATION; REQUIRED DRIVEN RPM; DRIVEN SHEAVE, DIAMETER AND RPM; BELT, SIZE AND QUANTITY; MOTOR SHEAVE DIAMETER AND RPM; CENTER TO CENTER DISTANCE, MAXIMUM, MINIMUM, AND ACUTAL.
C. AIR MOVING EQUIPMENT:
1. LOCATION; MANUFACTURER; MODEL NUMBER; SERIAL NUMBER; ARRANGEMENT/CLASS/DISCHARGE; AIR FLOW, SPECIFIED AND ACTUAL; RETURN AIR FLOW, SPECIFIED AND ACTUAL; OUTSIDE AIR FLOW, SPECIFIED AND ACTUAL; TOTAL STATIC PRESSURE (TOTAL EXTERNAL), SPECIFIED AND ACTUAL; INLET PRESSURE; DISCHARGE PRESSURE; SHEAVE MAKE/SIZE/BORE; NUMBER OF BELTS/MAKE/SIZE; FAN RPM.
D. RETURN AIR/OUTSIDE AIR:
1. IDENTIFICATION/LOCATION; DESIGN AIR FLOW; ACTUAL AIR FLOW; DESIGN RETURN AIR FLOW; ACTUAL RETURN AIR FLOW; DESIGN OUTSIDE AIR FLOW; ACTUAL OUTSIDE AIR FLOW; RETURN AIR TEMPERATURE; OUTSIDE AIR TEMPERATURE; REQUIRED MIXED AIR TEMPERATURE; ACTUAL MIXED AIR TEMPERATURE; DESIGN OUTSIDE/RETURN AIR RATIO; ACTUAL OUTSIDE/RETURN AIR RATIO.
E. AIR DISTRIBUTION TESTS:
1. AIR TERMINAL NUMBER; ROOM NUMBER/LOCATION; TERMINAL TYPE; TERMINAL SIZE; AREA FACTOR; DESIGN VELOCITY; DESIGN AIR FLOW; TEST (FINAL) VELOCITY; TEST (FINAL) AIR FLOW; PERCENT OF DESIGN AIR FLOW.

END OF SECTION

SECTION 01 30 00

ADMINISTRATIVE REQUIREMENTS

PART 1 GENERAL

1.1 SECTION INCLUDES
A. SUBMITTAL PROCEDURES.

PART 2 PRODUCTS - NOT USED

PART 3 EXECUTION

3.1 SUBMITTAL REVIEW
A. SUBMITTALS FOR REVIEW: ENGINEER WILL REVIEW EACH SUBMITTAL, AND APPROVE, OR TAKE OTHER APPROPRIATE ACTION.
B. ENGINEER'S ACTIONS WILL BE REFLECTED BY MARKING EACH RETURNED SUBMITTAL USING VIRTUAL STAMP ON ELECTRONIC SUBMITTALS.
C. ENGINEER'S ACTIONS ON ITEMS SUBMITTED FOR REVIEW:
1. AUTHORIZING PURCHASING, FABRICATION, DELIVERY, AND INSTALLATION:
a. "APPROVED", OR LANGUAGE WITH SAME LEGAL MEANING.
b. "APPROVED AS NOTED, RESUBMISSION NOT REQUIRED", OR LANGUAGE WITH SAME LEGAL MEANING.
2. NOT AUTHORIZING FABRICATION, DELIVERY, AND INSTALLATION:
a. "REVISE AND RESUBMIT".
1) RESUBMIT REVISED ITEM, WITH REVIEW NOTATIONS ACKNOWLEDGED AND INCORPORATED.

END OF SECTION

SECTION 23 05 53

IDENTIFICATION FOR HVAC PIPING AND EQUIPMENT

1.1 SECTION INCLUDES
A. NAMEPLATES.
B. PIPE MARKERS.

1.2 REFERENCE STANDARDS
A. ASME A13.1 - SCHEME FOR THE IDENTIFICATION OF PIPING SYSTEMS; 2007.
B. ASTM D709 - STANDARD SPECIFICATION FOR LAMINATED THERMOSETTING MATERIALS; 2013.

1.3 SUBMITTALS
A. SEE DIVISION 1 FOR SUBMITTAL PROCEDURES.
B. LIST: SUBMIT LIST OF WORDING, SYMBOLS, LETTER SIZE, AND COLOR CODING FOR MECHANICAL IDENTIFICATION.

PART 2 PRODUCTS

2.1 IDENTIFICATION APPLICATIONS
A. AIR HANDLING UNITS: NAMEPLATES.
B. EXHAUST FANS: NAMEPLATES OR OUTDOOR RATED LABEL.
C. PIPING: PIPE MARKERS.
D. THERMOSTATS: NAMEPLATES.

2.2 NAMEPLATES
A. NAMEPLATES:
1. LETTER COLOR: WHITE.
2. LETTER HEIGHT: 1/4 INCH.
3. BACKGROUND COLOR: BLACK.
4. PLASTIC: CONFORM TO ASTM D709.

2.3 PIPE MARKERS
A. PLASTIC PIPE MARKERS: FACTORY FABRICATED, FLEXIBLE, SEMI- RIGID PLASTIC, PREFORMED TO FIT AROUND PIPE OR PIPE COVERING; MINIMUM INFORMATION INDICATING FLOW DIRECTION ARROW AND IDENTIFICATION OF FLUID BEING CONVEYED.
B. PLASTIC TAPE PIPE MARKERS: FLEXIBLE, VINYL FILM TAPE WITH PRESSURE SENSITIVE ADHESIVE BACKING AND PRINTED MARKINGS.

2.4 CEILING TACKS
A. DESCRIPTION: STEEL WITH 3/4 INCH DIAMETER COLOR CODED HEAD.
B. COLOR CODE AS FOLLOWS:
1. HVAC EQUIPMENT: YELLOW.
2. FIRE DAMPERS AND SMOKE DAMPERS: RED.
3. HEATING/COOLING VALVES: BLUE.

PART 3 EXECUTION

3.1 PREPARATION
A. DEGREASE AND CLEAN SURFACES TO RECEIVE ADHESIVE FOR IDENTIFICATION MATERIALS.

3.2 INSTALLATION
A. INSTALL NAMEPLATES WITH CORROSIVE-RESISTANT MECHANICAL FASTENERS, OR ADHESIVE. APPLY WITH SUFFICIENT ADHESIVE TO ENSURE PERMANENT ADHESION AND SEAL WITH CLEAR LACQUER.

END OF SECTION

SECTION 23 05 93

TESTING, ADJUSTING, AND BALANCING FOR HVAC

1.1 SECTION INCLUDES
A. TESTING, ADJUSTMENT, AND BALANCING OF AIR SYSTEMS.

1.2 REFERENCE STANDARDS
A. AABC (NSTSB) - AABC NATIONAL STANDARDS FOR TOTAL SYSTEM BALANCE, 7TH EDITION; 2016.
B. AABC MN-1 - AABC NATIONAL STANDARDS FOR TOTAL SYSTEM BALANCE; 2002.
C. ASHRAE STD 111 - MEASUREMENT, TESTING, ADJUSTING, AND BALANCING OF BUILDING HVAC SYSTEMS; 2008.
D. NEBB (TAB) - PROCEDURAL STANDARDS FOR TESTING ADJUSTING AND BALANCING OF ENVIRONMENTAL SYSTEMS; 2015, EIGHTH EDITION.
E. SMACNA (TAB) - HVAC SYSTEMS TESTING, ADJUSTING AND BALANCING; 2002.

1.3 SUBMITTALS
A. SEE DIVISION 1 FOR SUBMITTAL PROCEDURES.
B. TAB PLAN: SUBMIT A WRITTEN PLAN INDICATING THE TESTING, ADJUSTING, AND BALANCING STANDARD TO BE FOLLOWED AND THE SPECIFIC APPROACH FOR EACH SYSTEM AND COMPONENT.
1. INCLUDE AT LEAST THE FOLLOWING IN THE PLAN:
a. LIST OF ALL AIR FLOW, WATER FLOW, SOUND LEVEL, SYSTEM CAPACITY AND EFFICIENCY MEASUREMENTS TO BE PERFORMED AND A DESCRIPTION OF SPECIFIC TEST PROCEDURES, PARAMETERS, FORMULAS TO BE USED.
b. COPY OF FIELD CHECKOUT SHEETS AND LOGS TO BE USED, LISTING EACH PIECE OF EQUIPMENT TO BE TESTED, ADJUSTED AND BALANCED WITH THE DATA CELLS TO BE GATHERED FOR EACH.
c. DISCUSSION OF WHAT NOTATIONS AND MARKINGS WILL BE MADE ON THE DUCT AND PIPING DRAWINGS DURING THE PROCESS.
d. FINAL TEST REPORT FORMS TO BE USED.
e. PROCEDURES FOR FORMAL DEFICIENCY REPORTS, INCLUDING SCOPE, FREQUENCY AND DISTRIBUTION.
C. FINAL REPORT: INDICATE DEFICIENCIES IN SYSTEMS THAT WOULD PREVENT PROPER TESTING, ADJUSTING, AND BALANCING OF SYSTEMS AND EQUIPMENT TO ACHIEVE SPECIFIED PERFORMANCE.
1. REVISE TAB PLAN TO REFLECT ACTUAL PROCEDURES AND SUBMIT AS PART OF FINAL REPORT.
2. SUBMIT DRAFT COPIES OF REPORT FOR REVIEW PRIOR TO FINAL ACCEPTANCE OF PROJECT. PROVIDE FINAL COPIES FOR ENGINEER AND FOR INCLUSION IN OPERATING AND MAINTENANCE MANUALS.
3. INCLUDE ACTUAL INSTRUMENT LIST, WITH MANUFACTURER NAME, SERIAL NUMBER, AND DATE OF CALIBRATION.
4. FORM OF TEST REPORTS: WHERE THE TAB STANDARD BEING FOLLOWED RECOMMENDS A REPORT FORMAT USE THAT; OTHERWISE, FOLLOW ASHRAE STD 111.
5. UNITS OF MEASURE: REPORT DATA IN I-P (INCH-POUND) UNITS ONLY.
D. PROJECT RECORD DOCUMENTS: RECORD ACTUAL LOCATIONS OF FLOW MEASURING STATIONS AND BALANCING VALVES AND ROUGH SETTING.

PART 2 PRODUCTS

2.1 GENERAL REQUIREMENTS
A. TEST INSTRUMENTS:
1. BALANCING CONTRACTOR SHALL PROVIDE ALL NECESSARY TEST INSTRUMENTS REQUIRED TO TAKE READINGS INCLUDING, BUT NOT LIMITED TO: PRESSURE GAUGES, THERMOMETERS, HUMIDITY INSTRUMENTS, SLING PSYCHROMETERS, FLOW METER READ OUT INSTRUMENTS (DIFFERENTIAL PRESSURE GAUGES, ETC.), AIR FLOW HOODS, PITOT TUBES, ANEMOMETERS, AMMETERS, VOLTMETERS, TACHOMETERS, SOUND LEVEL METERS, VIBRATION ANALYZERS, ETC., AS REQUIRED TO PERFORM MEASUREMENTS REQUIRED TO PERFORM THE WORK OF THIS SECTION AND APPLICABLE COMMISSIONING SPECIFICATIONS. THESE INSTRUMENTS ARE CONSIDERED TO BE THE PROPERTY OF THE BALANCING CONTRACTOR AND REQUIRED FOR USUAL PERFORMANCE OF TESTING AND BALANCING WORK. NO ALLOWANCE WILL BE MADE FOR CONTRACTOR'S FAILURE TO PROVIDE ADEQUATE TEST INSTRUMENTS.
B. INCIDENTAL EQUIPMENT AND MATERIALS:
1. BALANCING CONTRACTOR SHALL PROVIDE AT HIS OWN EXPENSE INCIDENTAL AND/OR TEMPORARY EQUIPMENT REQUIRED TO MAKE SUCH READINGS AS REQUIRED FOR THE PERFORMANCE OF THIS WORK. SUCH INCIDENTALS INCLUDE BUT ARE NOT LIMITED TO: PIPE NIPPLES, COUPLINGS, TEES, ELBOWS, PLUGS AND CAPS, GAUGE VALVES, TEFLON TAPE, AND OTHER MISCELLANEOUS FITTINGS REQUIRED TO MAKE READINGS REQUIRED FOR BALANCING WORK. INCIDENTAL MATERIALS AND FITTLINGS SHALL BE REMOVED AND THE FACILITY RESTORED TO 'AS FOUND' CONDITION AFTER COMPLETION OF READINGS AND BALANCING ACTIVITIES.
C. TOOLS AND LABOR:
1. BALANCING CONTRACTOR SHALL PROVIDE ALL TOOLS AND LABOR REQUIRED TO EFFECT NECESSARY READINGS FOR BALANCING WORK, INCLUDING BUT NOT LIMITED TO ELECTRIC DRILL AND BITS, WRENCHES, PLIERS, SCREWDRIVERS, TEFLON TAPE, FLASHLIGHTS, RAGS, POCKET KNIFE OR LEATHERMAN, PENCILS, PENS, TEST FORMS, PAPER, AND OTHER MINOR TOOLS REQUIRED FOR WORK OF THIS SECTION.

SALAS O'BRIEN
expect a difference
3700 South Susan Street, Ste 150
Santa Ana, California 92704
949.517.4900 | 408.297.2995 (f)
salasobrien.com
California | Georgia | Louisiana
Montana | Texas | Washington
Licensed in 50 States

REGISTERED PROFESSIONAL ENGINEER
JAMES ZWINGMAN
No. M35588
MECHANICAL
STATE OF CALIFORNIA

SAN BERNARDINO COUNTY

800MHZ UPGRADES - CAJON PASS TOWER

WBSE #10.10.1011
CIP #20-225

ISSUE		
MARK	DATE	DESCRIPTION
	12/23/21	95% CD
	12/16/22	100% CD

SOBE PROJECT NO:	2002862
DATE:	12/16/22
DRAWN BY:	TP
CHECKED BY:	AC
APPROVED BY:	AC

SHEET TITLE

MECHANICAL SCHEDULES & DETAILS

SCALE: AS NOTED

THIS DRAWING IS 30" X 42" AT FULL SIZE

M-5.1

THIS DRAWING IS 30" X 42" AT FULL SIZE, 15" X 21" AT HALF SIZE. © 2015 BY SALAS O'BRIEN ENGINEERS, INC.

NOT FOR BID

GENERAL NOTES

1. CONTRACTOR IS RESPONSIBLE TO OBTAIN A COMPLETE SET OF CONTRACT DOCUMENTS, ADDENDA, DRAWINGS, AND SPECIFICATIONS. PRIOR TO SUBMITTING PROPOSAL, CONTRACTOR SHALL EXAMINE ARCHITECTURAL, STRUCTURAL AND MECHANICAL CONSTRUCTION DRAWINGS AND SPECIFICATIONS AND SHALL HAVE VISITED THE CONSTRUCTION SITE. HE/SHE SHALL BE FAMILIAR WITH THE EXISTING CONDITIONS UNDER WHICH HE/SHE WILL HAVE TO OPERATE AND WHICH WILL IN ANY WAY AFFECT THE WORK UNDER THIS CONTRACT. NO SUBSEQUENT ALLOWANCE WILL BE MADE IN THIS CONNECTION IN BEHALF OF THE CONTRACTOR FOR ANY ERROR OR NEGLIGENCE ON HIS/HER PART. DETERMINE THE SEQUENCE OF CONSTRUCTION THROUGHOUT THE PROJECT, INCLUDING TEMPORARY FACILITIES AND CONNECTIONS REQUIRED FOR THE DURATION OF THE PROJECT.

2. ALL TEMPORARY CONNECTIONS SHALL BE CONSIDERED PART OF THIS CONTRACT AND NO EXTRA CHARGES WILL BE ALLOWED. THIS SHALL INCLUDE MINOR ITEMS OF MATERIAL OR EQUIPMENT NECESSARY TO MEET THE REQUIREMENTS AND INTENT OF THE PROJECT.

3. THE CONTRACTOR SHALL BE RESPONSIBLE FOR THE SAFETY OF PERSONS AND PROPERTY AND SHALL PROVIDE INSURANCE COVERAGE AS NECESSARY FOR LIABILITY, PERSONAL, AND PROPERTY DAMAGE, TO FULLY PROTECT THE OWNER, ARCHITECT, AND ENGINEER FROM ANY AND ALL CLAIMS RESULTING FROM THIS WORK.

4. THE CONTRACTOR SHALL PROVIDE TO THE ARCHITECT A CONSTRUCTION SCHEDULE OF ALL ELECTRICAL WORK. THE CONSTRUCTION SCHEDULE SHALL IDENTIFY ALL SIGNIFICANT MILESTONES WITH COMPLETION DATES.

5. THE CONTRACTOR SHALL MAINTAIN RECORD DRAWINGS AT THE PROJECT SITE INDICATING ALL MODIFICATIONS TO ELECTRICAL SYSTEMS. THE CONTRACTOR SHALL, AT THE CONCLUSION OF THE PROJECT, PROVIDE A SET OF REPRODUCIBLE (AUTOCAD), ACCURATE AND NEAT "AS-BUILT" DRAWINGS ACCEPTABLE TO THE ARCHITECT.

6. THESE DRAWINGS DO NOT REPRESENT THE EXACT LOCATIONS, SIZES OR EXTENT OF UTILITIES ON SITE. CONTRACTOR SHALL TAKE STANDARD PRECAUTIONS FOR WORK IN EXISTING FACILITIES.

7. EXISTING ELECTRICAL WIRING WHICH WILL NOT BE MADE OBSOLETE AND WHICH WILL BE DISTURBED DUE TO CONSTRUCTION CHANGES REQUIRED BY THIS CONTRACT SHALL BE RESTORED TO OPERATING CONDITION, AS REQUIRED AND/OR DIRECTED. WHERE REQUIRED, SHOWN AND/OR DIRECTED, OUTLETS AND CONDUIT RUNS SHALL BE RELOCATED. IN SOME CASES IT MAY BE NECESSARY TO EXTEND CONDUITS AND PULL IN NEW WIRING OR INSTALL JUNCTION BOXES AND SPLICE IN NEW WIRING OR REPLACE OLD WIRING WITH NEW.

8. CERTAIN REMODELING OF ELECTRICAL FACILITIES WILL BE REQUIRED IN THE EXISTING BUILDING. EXISTING CONDUIT RUNS ARE GENERALLY NOT SHOWN, ALTHOUGH A FULL ATTEMPT HAS BEEN MADE TO SHOW SOME EXISTING CONDITIONS, OF WHICH INFORMATION HAS BEEN TAKEN FROM EXISTING RECORD DRAWINGS AND/OR LIMITED FIELD INVESTIGATIONS. THE DRAWINGS SHOWING LOCATION OF EXISTING EQUIPMENT, OUTLETS, FIXTURES, ETC., ARE APPROXIMATE ONLY (CONTRACTOR TO FIELD VERIFY).

9. ALL ELECTRICAL MATERIALS AND EQUIPMENT SHALL BE NEW AND SHALL BE LISTED AND LABELED BY A NATIONALLY RECOGNIZED TESTING LABORATORY AND SHALL BE INSTALLED AS PER LISTING OR LABELING (IE. MAXIMUM FUSE SIZE MEANS FUSE PROTECTION IS REQUIRED).

10. ALL ELECTRICAL EQUIPMENT AND INSTALLATION SHALL COMPLY WITH THE FOLLOWING REQUIREMENTS:
    a. AMERICAN STANDARD ASSOCIATION (ASA)
    b. AMERICAN NATIONAL STANDARD INSTITUTE (ANSI)
    c. AMERICAN SOCIETY OF TESTING MATERIALS (ASTM)
    d. CALIFORNIA CODE OF REGULATIONS TITLE 24 (CCR)
    e. INSTITUTE OF ELECTRICAL AND ELECTRONIC ENGINEERS (IEEE)
    f. INSULATED POWER CABLE ENGINEERS ASSOCIATIONS (IPCEA)
    g. NATIONAL ELECTRICAL MANUFACTURERS ASSOCIATIONS (NEMA)
    h. NATIONAL FIRE PROTECTION ASSOCIATION (NFPA)
    i. ALL LOCAL CODE HAVING JURISDICTION

11. CONTRACTOR SHALL SECURE AND PAY FOR ALL PERMITS, FEES, INSPECTIONS AND INCIDENTAL COSTS NECESSARY FOR EXECUTION AND COMPLETION OF ELECTRICAL WORK, INCLUDING ALL CHARGES BY STATE, COUNTY AND LOCAL GOVERNMENTAL AGENCIES. CONTRACTOR SHALL BE RESPONSIBLE FOR THE ELECTRICAL UTILITY SYSTEM SHUT-DOWNS AND START-UP. CONTRACTOR SHALL BE RESPONSIBLE FOR COORDINATION REQUIRED WITH OTHER AGENCIES AND UTILITY COMPANIES.

12. CONTRACTOR IS RESPONSIBLE FOR COORDINATING ALL CROSSINGS ON NEW UTILITIES WITH THAT OF EXISTING ON SITE AND IN ADJACENT PROPERTIES. NOTIFY THE ENGINEER IMMEDIATELY OF ANY DEVIATIONS OR DISCREPANCIES FROM THIS PLAN.

13. CONTRACTOR SHALL COORDINATE HIS/HER WORK WITH OTHER TRADE ON SITE. ANY COST TO PERFORM WORK TO ACCOMPLISH SAID COORDINATION WHICH DIFFERS FROM THE WORK AS SHOWN ON THE DRAWINGS SHALL BE INCURRED BY THE CONTRACTOR. ANY DISCREPANCIES, AMBIGUITIES OR CONFLICTS SHALL BE BROUGHT TO THE ATTENTION OF THE ARCHITECT DURING BID TIME FOR CLARIFICATIONS. ANY SUCH CONFLICTS NOT CLARIFIED PRIOR TO BID SHALL BE SUBJECT TO THE INTERPRETATION OF THE ARCHITECT/ENGINEER AT NO ADDITIONAL COST TO THE OWNER.

14. COORDINATE WITH OTHER TRADES AS TO THE EXACT LOCATION OF THEIR RESPECTIVE EQUIPMENT. PROVIDE POWER AND CONNECTION TO MOTORS AND EQUIPMENT REQUIRING ELECTRICAL CONNECTIONS AS INDICATED ON ELECTRICAL DRAWINGS AND DRAWINGS OF OTHER TRADES. CONTRACTOR SHALL REVIEW DRAWINGS OF OTHER TRADES FOR CONTROL DIAGRAMS, SIZE AND LOCATION OF EQUIPMENT. DISCONNECT SWITCHES, STARTERS, AND CONDUITS FOR CONTROL WIRING FOR MECHANICAL AND PLUMBING EQUIPMENT SHALL BE PROVIDED BY ELECTRICAL CONTRACTOR. CONTRACTOR SHALL BE RESPONSIBLE FOR OBTAINING MANUFACTURER'S SHOP DRAWINGS PRIOR TO ROUGHING IN ALL CONDUITS TO THIS EQUIPMENT.

15. BEFORE ROUGH-IN, VERIFY ALL MOUNTING HEIGHTS AND EXACT LOCATIONS FOR ALL EQUIPMENT, ELECTRICAL CONNECTIONS, STUB-UPS, RECEPTACLES, OUTLETS, CONDUIT RUNS, ETC. WITH ARCHITECT AND OWNER. PLACE DEVICES LOCATED ABOVE COUNTERS, SHELVING, ETC. AND IN BATHROOMS SO AS NOT TO CONFLICT WITH EDGES OF WAINSCOTING, COUNTER SPLASH, SHELVING, ETC. ARCHITECTURAL DRAWINGS SHALL GOVERN. REFER TO ARCHITECTURAL ELEVATIONS FOR EXACT LOCATIONS OF ELECTRICAL DEVICES

16. MOUNTING HEIGHTS OF ALL CONTROL DEVICES TO BE USED BY OCCUPANT OF THE ROOM OR AREA SHALL BE MOUNTED AT THE FOLLOWING HEIGHTS:
    RECEPTACLES OUTLETS : +18" (TO BOTTOM OF OUTLETS)
    TELEPHONE/TV/DATA OUTLETS : +18" (TO BOTTOM OF OUTLETS)
    LIGHT SWITCHES : +44" (TO HIGHEST OPERABLE PART)
    OUTLETS ABOVE COUNTER : +44" (TO HIGHEST OPERABLE PART)
    MOUNTING HEIGHTS OF ALL DEVICES AND EQUIPMENT ARE FROM FINISHED FLOOR TO LOCATION OF DEVICE AS NOTED. EQUIPMENT INSTALLED IN LOCATIONS NOT APPROVED BY THE ARCHITECT SHALL BE RELOCATED AS DIRECTED BY THE ARCHITECT AT NO ADDITIONAL COST TO THE OWNER.

17. COORDINATE ALL OUTLET BOX INSTALLATION WITH ARCHITECTURAL WALL FINISH SCHEDULES. SPACE BETWEEN FACEPLATE AND DEVICE BOX SHALL NOT EXCEED 1/8".

18. FOR RENOVATION WORK, THE CONTRACTOR SHALL CONCEAL ALL WORK WHERE POSSIBLE. ALL EXPOSED RACEWAY AND BOXES IN OCCUPIED AREAS OR ON EXTERIOR WALLS SHALL BE PAINTED TO MATCH ADJACENT FINISHES.

19. THE CONTRACTOR SHALL BE HELD FULLY RESPONSIBLE FOR THE PROPER RESTORATION OF ALL EXISTING SURFACES REQUIRING PATCHING, PLASTERING, PAINTING AND/OR OTHER REPAIR DUE TO THE INSTALLATION OF ELECTRICAL WORK UNDER THE TERMS OF THIS SPECIFICATION. CLOSE ALL OPENINGS, REPAIR ALL SURFACES, ETC., AS REQUIRED.

20. SEAL ALL CONDUIT PENETRATIONS THROUGH FIRE RATED WALLS AND CEILINGS. FURNISH AND INSTALL FIRE RATED BACKBOXES AS REQUIRED, MAINTAINING FIRE RATING OF CEILING OR WALLS WHERE RECESSED ELECTRIC EQUIPMENT SUCH AS LIGHT FIXTURES, SWITCHES, RECEPTACLES, PANEL, ETC. ARE INSTALLED IN RATED WALL OR CEILINGS. PENETRATIONS OF FIRE RATED WALLS, CEILINGS, OR FLOORS SHALL COMPLY WITH CBC CHAPTER 7 (714) REQUIREMENTS. CONDUIT PENETRATIONS THAT ARE NOT STUBBED-OUT INSIDE THE WALL SHALL MEET F AND T RATING. ALL FIRE PROOFING METHODS SHALL BE UL APPROVED.

21. ALL EXTERIOR EQUIPMENT SHALL BE NEMA 3R RATED. ALL WALL PENETRATIONS TO EXTERIOR WALLS SHALL BE SEALED WATER TIGHT.

22. PULLING TAPES: ALL RACEWAY WITHOUT CABLE OR WIRE SHALL BE INSTALLED WITH A MINIMUM 1100 LBS. STRENGTH TEST POLYESTER PULLING TAPE. PULLING TAPES SHALL BE DETECTABLE MULE-TAPE WITH SEQUENTIAL FOOTAGE MARKING.

23. RUN NO MORE THAN 3 CURRENT CARRYING CONDUCTORS IN ANY WIREWAY UNLESS DE-RATING IS APPROVED BY ENGINEER OR SHOWN ON DRAWINGS.

24. ALL BRANCH CIRCUIT CONDUCTORS SHALL BE COPPER, #10 AWG MINIMUM, RATED FOR 600V, THHN/THWN, 75 DEGREE CELSIUS. ALL CONDUCTORS SHALL BE STRANDED, SOFT DRAWN ANNEALED COPPER WIRE 98% CONDUCTIVITY, BEARING THE UL LABEL. SYSTEM VOLTAGE SHALL BE IDENTIFIED AS TO VOLTAGE AND PHASE CONNECTIONS BY MEANS OF COLOR IMPREGNATED INSULATION OR APPROVED COLORED MARKING TAPE.

25. WHERE MULTI-HOMERUNS ARE INDICATED ON DRAWINGS INDICATING THE SAME CIRCUIT NUMBER, PROVIDE A JUNCTION BOX ABOVE THE ACCESSIBLE CEILING AND ROUTE ONE SET OF WIRES TO THE CIRCUIT BREAKER.

26. REFER TO THE SINGLE LINE DIAGRAM FOR THE CONDUIT AND CONDUCTOR SIZES HOMERUN TO ELECTRICAL PANELS. CONDUIT RUNS MAY NOT BE SHOWN ON DRAWINGS, BUT ARE PART OF THIS CONTRACT.

27. ALL CONDUIT RUNS INCLUDING STRAIGHT FEEDER AND BRANCH CIRCUIT SHALL BE PROVIDED WITH SUFFICIENT PULL BOXES OR JUNCTION BOXES TO LIMIT THE MAXIMUM LENGTH OF ANY SINGLE CABLE PULL TO 100 FEET. PULL BOXES SHALL BE SIZED PER CODE OR AS INDICATED ON DRAWINGS. LOCATIONS SHALL BE DETERMINED IN THE FIELD OR AS INDICATED ON THE DRAWINGS.

28. FINAL CONNECTIONS TO ALL EQUIPMENT SHALL BE PER MANUFACTURER'S APPROVED WIRING DIAGRAMS, DETAILS, AND INSTRUCTIONS. IT SHALL BE THE CONTRACTOR'S RESPONSIBILITY TO PROVIDE MATERIAL AND EQUIPMENT COMPATIBLE WITH EQUIPMENT ACTUALLY SUPPLIED.

29. DO NOT COMBINE DIFFERENT SYSTEM VOLTAGES IN SAME CONDUIT (EG., 120/208V VS. 277/480V), UNLESS APPROVED BY ENGINEER OR SHOWN ON DRAWINGS.

30. ELECTRICAL SYSTEMS SHALL BE INSTALLED FOR FINAL INSPECTIONS. PROVIDE NEUTRAL TEST AND PROOF OF TORQUE DURING FINAL INSPECTION FOR ALL UNITS. FINAL TERMINATIONS OF CONDUCTORS TO ELECTRICAL EQUIPMENT AND DEVICES SHALL BE TORQUE WRENCH TIGHTENED TO THE MANUFACTURER'S RECOMMENDED SPECIFICATION, NO EXCEPTION.

31. CIRCUIT BREAKER TERMINALS IN SWITCHBOARDS AND LOAD CENTER SHALL BE UL LISTED AND APPROVED FOR USE WITH COPPER 75 DEGREE CELSIUS CONDUCTORS.

32. SIZES OF BREAKERS, SWITCHES, FUSES AND FEEDERS ARE BASED ON DESIGNED EQUIPMENT SIZES. THESE SIZES SHALL BE ADJUSTED TO SATISFY REQUIREMENTS OF ACTUAL INSTALLED OR SUBSTITUTE EQUIPMENT. UP SIZING OR DOWNSIZING OF FEEDERS SHALL BE PROVIDED WITHOUT ADDITIONAL COST TO THE OWNER.

33. AS REQUIRED ALL OVERSIZED FEEDERS THAT WERE ADJUSTED IN SIZE TO COMPENSATE FOR VOLTAGE DROP SHALL BE PROVIDED WITH ADAPTER LUGS OR SPLICE BOX. ADAPTER LUGS SHALL BE PROVIDED IF SIZE IS AVAILABLE. OTHERWISE PROVIDE CABLE SPLICES IN THE SPLICE BOX TO REDUCE CABLES TO THE MAXIMUM SIZE THAT THE BREAKER LUGS CAN ACCOMMODATE.

34. CONTRACTOR SHALL BE RESPONSIBLE FOR ALL SAW-CUTTING, TRENCHING, BACKFILLING, COMPACTION AND PATCHING OF CONCRETE AND ASPHALT AS REQUIRED TO COMPLETE WORK. USE EXTREME CAUTION WHEN TRENCHING NEAR EXISTING UNDERGROUND UTILITY LINES. CONTRACTOR SHALL PROVIDE ALL REQUIRED CUTTING, PATCHING, PAINTING, AND REPAIRS NECESSARY TO RESTORE DAMAGED SURFACES TO EQUAL OR BETTER THAN ORIGINAL CONDITIONS EXISTING AT THE START OF WORK.

35. ALL ELECTRICAL EQUIPMENT SHALL BE BRACED OR ANCHORED TO RESIST HORIZONTAL FORCE ACTING IN ANY DIRECTION IN ACCORDANCE WITH THE REQUIREMENTS OF THE LATEST EDITION OF ASCE7.

36. ALL INTERIOR AND ABOVE GRADE EXTERIOR CONDUIT INSTALLATION SHALL BE RIGID GALVANIZED STEEL, UNLESS EXCEPTED BY NOTE 37 BELOW.

37. ELECTRICAL METALLIC TUBING (EMT) MAY BE USED IN THE FOLLOWING CONDITIONS: INTERIOR APPLICATIONS, SMALLER THAN 2" TRADE SIZE DIAMETER AND INSTALLED EIGHT (8) FEET FROM FINISHED FLOOR OR HIGHER, OR INTERIOR APPLICATIONS, SMALLER THAN 2" TRADE SIZE DIAMETER AND ENTERING A PANEL FROM ABOVE.

38. CONNECTIONS TO VIBRATING EQUIPMENT (MOTOR, TRANSFORMER ENCLOSURE, ETC.) AND SEISMIC SEPARATIONS SHALL BE PROVIDED WITH LIQUID-TIGHT FLEXIBLE STEEL CONDUIT WITH WATERTIGHT CONNECTORS. MAXIMUM LENGTH OF CONDUIT SHALL BE SIX FEET, UNLESS OTHERWISE NOTED.

39. POLYVINYL CHLORIDE (PVC) SCHEDULE 40 MAY BE INSTALLED BENEATH SLAB AND UNDERGROUND INSTALLATION. INSTALL PVC COATED RIGID STEEL CONDUIT FOR TRANSITION FROM UNDERGROUND TO ABOVE GRADE INSTALLATION.

40. CONTRACTOR SHALL PROVIDE TERMINATIONS FOR ALL DATA/VOICE CABLES INDICATED AT OUTLET LOCATIONS INDICATED ON DRAWINGS.

41. CONTRACTOR SHALL PROVIDE AND INSTALL ACCESS PANELS IN NON-ACCESSIBLE CEILINGS WHERE REQUIRED TO ACCESS ELECTRICAL EQUIPMENT IN CEILING SPACE. ACCESS DOORS SHALL HAVE FIRE RATING EQUAL TO THE CEILING ASSEMBLY IN WHICH THEY ARE INSTALLED.

42. ALL FIRE LIFE SAFETY EQUIPMENT, SUCH AS FIRE ALARM CONTROL PANEL AND REMOTE POWER SUPPLIES SHALL BE PROVIDED WITH DEDICATED CIRCUITS. IDENTIFY CIRCUIT DESIGNATION AND PROVIDE PERMANENT LABELING, "FIRE ALARM CIRCUIT" ON ELECTRICAL PANEL. PROVIDE LOCKABLE CIRCUIT BREAKER.

43. CONTROL CONDUIT FOR ENERGY/BUILDING MANAGEMENT SYSTEM (E/BMS) SHALL BE PROVIDED AND INSTALLED BY ELECTRICAL CONTRACTOR.

44. ROUTE CONDUIT PARALLEL AND PERPENDICULAR TO WALLS AND ADJACENT PIPING. ARRANGE CONDUIT TO MAINTAIN HEADROOM AND TO PRESENT A NEAT APPEARANCE.

45. WHEN A DISCREPANCY IN QUANTITY OR SIZE OF CONDUIT, WIRE, EQUIPMENT, CIRCUIT BREAKERS, ETC., ARISES ON THE DRAWINGS OR SPECIFICATIONS, CONTRACTOR SHALL BE RESPONSIBLE FOR PROVIDING AND INSTALLING ALL MATERIAL REQUIRED BY THE MOST STRINGENT CONDITIONS NOTED ON THE DRAWINGS OR IN THE SPECIFICATIONS TO PROVIDE A COMPLETE AND OPERABLE SYSTEM, OR AS DIRECTED BY ENGINEER.

46. FOR SMALL AC MOTORS NOT HAVING BUILT-IN THERMAL OVERLOAD PROTECTION, PROVIDE MANUAL MOTOR STARTERS WITH OVERLOAD HEATER ELEMENTS SIZED PER MANUFACTURER'S RECOMMENDATION. FOR SMALL AC MOTORS WITH BUILT-IN THERMAL OVERLOAD PROTECTION, PROVIDE A HORSEPOWER RATED TOGGLE DISCONNECT SWITCH.

47. DISCONNECT SAFETY SWITCHES SHALL BE HEAVY DUTY AND BE RATED FOR THE NUMBER OF POLES, VOLTAGE, CURRENT AND HORSEPOWER RATING AS REQUIRED. PROVIDE FUSE PROTECTION BASED ON THE MOTOR NAMEPLATE RATINGS.

48. PROVIDE PERMANENT IDENTIFICATION (NAMEPLATES) FOR ALL ELECTRICAL PANELS, SWITCHBOARDS, MOTOR CONTROL CENTERS, DISCONNECT SWITCHES, TRANSFORMERS, TERMINAL CABINETS, ETC.

49. ELECTRICAL CONTRACTOR IS RESPONSIBLE TO VERIFY TYPE OF CEILING SYSTEMS AND TO FURNISH APPROVED LIGHTING FIXTURES OF THE TYPE REQUIRED FOR MOUNTING IN SUBJECT CEILING. PROVIDE ALL NECESSARY MOUNTING KIT/HARDWARE TO PROVIDE A COMPLETE WORKING LIGHTING SYSTEM.

50. ALL FINAL ELECTRICAL CONNECTIONS TO OWNER FURNISHED EQUIPMENT SHALL BE MADE BY THE ELECTRICAL CONTRACTOR.

51. ALL SPLICES AND TERMINALS SHALL BE COMPRESSION TYPE, OF SEAMLESS PURE COPPER, TIN PLATED, LONG BARREL, INSPECTION WINDOW, TERMINALS WITH TWO-HOLE PAD (WITH NEMA DRILLING). CLEAN ALL SURFACES AND INSTALL WITH OXIDE INHIBITING COMPOUND BURNDY PENETROX-E OR EQUAL. APPLY COMPOUND BETWEEN BUS BAR AND LUG PAD AND BETWEEN CONDUCTOR AND LUG BARREL. INSTALL COMPRESSION CONNECTORS WITH A FULLY CIRCUMFERENTIAL COMPRESSION DIE BURNDY HYPRESS OR EQUAL.

52. LABEL ALL CONDUIT WHERE IT BEGINS, AND WHERE IT TERMINATES INTO A BOX, PANEL, DEVICE, LOAD, OR DISCONNECT. CONDUIT SHALL BE LABELED EVERY 30 FEET OR LESS. CONDUIT SHALL BE LABELED WHERE IT PENETRATES ANY WALL OR FLOOR. LABEL SHALL BE PERMANENT PRINTED LABELS (DESCRIBING SOURCE, CIRCUIT, AND LOAD) LEGIBLE FROM FLOOR WHERE POSSIBLE (STANDING POSITION).

53. CONTRACTOR'S FAILURE TO ORDER OR RELEASE ORDER FOR MATERIALS AND/OR EQUIPMENT WILL NOT BE ACCEPTED AS A REASON TO SUBSTITUTE ALTERNATE MATERIALS, EQUIPMENT OR INSTALLATION METHODS.

54. PROVIDE ARC-FLASH HAZARD WARNING LABELS ON ALL AFFECTED ELECTRICAL EQUIPMENT, INCLUDING SWITCHBOARDS, PANEL BOARDS, INDUSTRIAL CONTROL PANELS, METER SOCKET ENCLOSURES, AND MOTOR CONTROL CENTERS. MARKING SHALL BE LOCATED SO AS TO BE CLEARLY VISIBLE TO QUALIFIED PERSONS. LABEL SHALL BE FACTORY PRE-PRINTED OR MACHINE-PRINTED SELF-ADHESIVE VINYL MATERIAL; UV, CHEMICAL, WATER, HEAT AND ABRASION RESISTANT; PRODUCED USING MATERIALS RECOGNIZED BY UL 969. MINIMUM SIZE: 3.5 BY 5 INCHES.

55. UNLESS OTHERWISE NOTED, ARRANGE, PAY FOR, COORDINATE AND PROVIDE ALL PERMITS NECESSARY FOR A COMPLETE AND OPERABLE SYSTEM.

56. ALL WORK IS <N> UNLESS OTHERWISE NOTED.

57. ELECTRICAL CONDUCTORS SERVING EQUIPMENT SUPPLIED BY POWER CONVERSION EQUIPMENT AS PART OF A VARIABLE FREQUENCY DRIVE (VFD) SYSTEM AND/OR A SERVO DRIVE SYSTEM SHALL HAVE THERMOSET INSULATION TYPE XHHW, OR XHHW-2

DEMOLITION NOTES

1. REMOVE EXISTING EQUIPMENT IN CONFLICT WITH NEW CONDITIONS. REMOVE ALL WIRE NOT IN SERVICE AND FROM ABANDONED RACEWAYS. PROTECT EXISTING CIRCUITING PASSING THROUGH DEMOLITION AREAS. EXTEND AND/OR RELOCATE AS NECESSARY.

2. ALL ABANDONED EQUIPMENT INCLUDING LIGHT, RECEPTACLES, DATA, FIRE ALARM, ETC., SHALL BE COVERED WITH BLANK METAL PLATES AND PAINTED TO MATCH THE ADJACENT FINISH OF SURROUNDING WALLS OR CEILING TO THE SATISFACTION OF THE ARCHITECT/OWNER.

3. ELECTRICAL CONTRACTOR IS RESPONSIBLE TO DISCONNECT AND REMOVE ALL EXISTING ELECTRICAL EQUIPMENT AFFECTED BY THE PROJECT. THIS INCLUDES REROUTING OR THE EXTENSION OF EXISTING CONDUIT AND FEEDER WHERE NECESSARY TO MAINTAIN OPERATIONAL OF ANY EXISTING EQUIPMENT.

4. CIRCUIT NUMBERS AND CONDUIT HOMERUNS SHOWN ON THESE DRAWINGS WERE TAKEN FROM EXISTING RECORD DRAWINGS. ELECTRICAL CONTRACTOR IS RESPONSIBLE TO VERIFY EXISTING CIRCUITING AND CONDUIT HOMERUNS. ADJUST CIRCUIT NUMBERS ACCORDING TO THE ACTUAL CONDITIONS.

5. WHERE EXISTING CONDUIT IS TO BE ABANDONED OR DEMOLISHED, THE CONDUIT SHALL BE REMOVED IF IT IS EXPOSED, IN A CRAWL SPACE OR IN AN ACCESSIBLE CEILING. ABANDONED OR DEMOLISHED CONDUIT FEEDS UP THROUGH THE FLOOR SHALL BE CUT OFF AND PLUGGED FLUSH WITH THE FLOOR.

6. ALL ELECTRICAL EQUIPMENT INCLUDING LIGHT, RECEPTACLE, DATA, FIRE ALARM, ETC., THAT ARE TO BE REMOVED, SHALL BE REMOVED COMPLETELY, INCLUDING CONDUIT AND WIRING BACK TO THE LAST DEVICE REMAINING IN SERVICE, OR SOURCE.

7. EXISTING CIRCUITS WHICH ARE REMOVED AND NOT REUSED SHALL BE IDENTIFIED ON THE PANEL SCHEDULE AS "SPARE".

8. ELECTRICAL CONTRACTOR SHALL COORDINATE WITH THE OWNER PRIOR TO REMOVAL OF EXISTING ELECTRICAL EQUIPMENT AND TURN OVER REMOVED EQUIPMENT THAT THE OWNER REQUESTS IN AN "AS-FOUND" CONDITION.

9. ALL DEMOLITION WORK SHOWN, IF ANY, WAS PREPARED FOR THE CONVENIENCE OF THE CONTRACTOR. NO REPRESENTATION HAS BEEN MADE THAT ALL ITEMS THAT MAY REQUIRE DEMOLITION HAVE BEEN SHOWN. IT SHALL BE THE RESPONSIBILITY OF THE CONTRACTOR TO CAREFULLY EXAMINE THE SITE AND THE CONTRACT DOCUMENTS AND TO PERFORM ALL DEMOLITION AND RECONSTRUCTION WHICH MAY BE REQUIRED FOR THE PROPER EXECUTION AND COMPLETION OF THE WORK.

10. WHEN CALLED FOR, OR SCOPE OF WORK REQUIRES ELECTRICAL EQUIPMENT TO BE REMOVED, ALL CONDUIT, WIRE, BOXES, HANGERS, ETC. SHALL BE REMOVED COMPLETELY. ALL OPENINGS SHALL BE PATCHED, SEALED AND PAINTED TO MATCH THE ADJACENT FINISH.

ELECTRICAL SCOPE OF WORK

1. COORDINATE WITH SCE FOR NEW (POWER AND FIBER) SERVICE INSTALLATION AND REQUIREMENT.

2. CONTRACTOR IS RESPONSIBLE FOR ALL THE ENGINEERING DESIGN FEE/PLAN REVIEW/PERMIT/INSTALLATION FEE AS SCE REQUIRED.

3. FURNISH AND INSTALL NEW SERVICE CONNECTION FROM ANTENNA BUILDING TO SCE SELECTED POINT OF CONNECTION. PROVIDE POWER CONNECTION AND PULL BOXES AS REQUIRED BY SCE.

4. FURNISH AND INSTALL NEW FIBER CONNECTION (4" CONDUIT) FROM ANTENNA BUILDING TO SCE SELECTED POINT OF CONNECTION. COORDINATE WITH SCE FOR EXACT LOCATION AND REQUIREMENT.

5. FURNISH AND INSTALL SCE METER, INCOMING UTILITY SERVICE, ELECTRICAL PANELS, FIBER TERMINAL CABINET, MTS, ATS, GENERATOR, GENERATOR ANNUNCIATOR, CAM-LOCK, EMS CONNECTION FROM EQUIPMENT/DEVICES TO EMS PANEL (COORDINATE WITH COUNTY OF SAN BERNARDINO FOR LOCATION AND REQUIREMENT), NEW WORK PER FLOOR PLAN.

A. FURNISH AND INSTALL GROUNDING SYSTEM PER PLAN. CONTRACTOR SHALL PERFORM GROUNDING RESISTANCE TEST PRIOR TO THE CONSTRUCTION AS THE GROUNDING RESISTANCE BASE LINE. CONTRACTOR SHALL PERFORM SECOND GROUNDING RESISTANCE TEST AFTER GROUNDING SYSTEM IS INSTALLED TO CONFIRM THE RESISTANCE IS LESS THAN 5 OHMS. GROUND RESISTANCE SHALL BE BELOW 5 OHMS. PROVIDE ADDITIONAL GROUNDING MEANS AND CHEMICAL AS REQUIRED TO REACH THIS VALUE. PROVIDE GROUND RESISTANCE TESTING REPORT AFTER INSTALLATION FOR REVIEW AND APPROVAL.

6. FURNISH AND INSTALL LEVEL 2 SOUND ENCLOSURE FOR DIESEL GENERATOR. DUAL WALL BELLY TANK, LEAK SENSOR, FULL TANK OF FUEL SHALL BE PROVIDED.

7. CONTRACTOR SHALL BE RESPONSIBLE TO APPLY AND OBTAIN APPROVAL FROM AQMD FOR THE NEW GENERATOR.

8. FURNISH AND INSTALL ALL ELECTRICAL CONNECTION, COMPONENTS, DEVICES AND EQUIPMENT PER FLOOR PLAN.

9. FURNISH AND INSTALL POWER CONNECTION TO HVAC UNITS.

10. ALL PERMIT FEES SHALL BE CONTRACTOR'S RESPONSIBILITY.

11. CONTRACTOR SHALL SUBMIT FULL LOAD TEST REPORT OF GENERATOR AND ATS. CONTRACTOR SHALL PROVIDE LOAD BANK FOR FULL LOAD TEST. REPORT SHALL BE REVIEWED AND APPROVED BY COUNTY AND EEOR PRIOR TO CLOSE-OUT.

SYMBOLS & ABBREVIATIONS

- EXTENT OF DEMOLITION
- NEW TO EXISTING CONNECTION
- WORK ITEM (ELECTRICAL)
- DETAIL DESIGNATION (1 / ME-1.1) — DETAIL NUMBER; DRAWING NUMBER (IF BLANK, SAME SHEET)
- EQUIPMENT DESIGNATION (CT / 1) — EQUIPMENT TYPE; EQUIPMENT NUMBER
- SECTION DESIGNATION (1 / ME-5.1) — SECTION NUMBER; DRAWING NUMBER (IF BLANK, SAME SHEET)
- EXISTING CONDUIT
- NEW CONDUIT
- CONDUIT TO BE DEMOLISHED
- PANEL BOARD/TERMINAL CABINET – FLUSH/SURFACE MOUNTED
- BRANCH CIRCUIT WIRING IN CONDUIT CONCEALED IN CEILING SPACE OR WHERE POSSIBLE, EXPOSED ON ROOF OR BUILDING EXTERIOR.
- BRANCH CIRCUIT WIRING IN CONDUIT CONCEALED UNDER FLOOR, UNDERGROUND OR WHERE POSSIBLE.
- BRANCH CIRCUIT HOME RUN TO PANEL. CONCEALED IN CEILING SPACE OR WHERE POSSIBLE. * = PANEL BOARD & CIRCUIT #
- EXISTING DEVICES, CONDUITS, WIRES, ETC TO REMAIN
- NEW (BOLD) DEVICES, CONDUITS, WIRES, ETC.
- CONDUIT UP
- CONDUIT DOWN
- WP GFI — DUPLEX GFI RECEPTACLE, WEATHERPROOF, 20A, 165V, 3WG, NEMA 5-20R, GFI
- JUNCTION BOX – CEILING/FLOOR/ROOF/WALL MOUNTED
- $ WP T — HORSEPOWER RATED TOGGLE WITH THERMAL OVERLOAD WEATHER PROOF
- HEAVY DUTY HEAVY NO-FUSED DISCONNECT SWITCH, WALL MOUNTED
- HEAVY DUTY HEAVY FUSED DISCONNECT SWITCH, WALL MOUNTED
- T — THERMOSTAT
- CO2 — CARBON DIOXIDE SENSOR
- CO — CARBON MONOXIDE DETECTOR WITH SOUNDER BASE

@	AT
AHJ	AUTHORITY HAVING JURISDICTION
BLDG	BUILDING
C	CONDUIT
CB	CIRCUIT BREAKER
℄	CENTERLINE
CLG	CEILING
CKT	CIRCUIT
C.O.	CONDUIT ONLY (W/PULLROPE)
CONT	CONTINUATION
CSFM	CALIFORNIA STATE FIRE MARSHALL
DN	DOWN
DS	DISCONNECT SWITCH
DWG	DRAWING
<E>	EXISTING
ELEC	ELECTRICAL
EM	EMERGENCY
EMS	ENERGY MANAGEMENT SYSTEM
EQ	EQUAL
EQUIP.	EQUIPMENT
<ERR>	EXISTING TO REMAIN AND BE RECONNECTED
FA	FIRE ALARM
FACP	FIRE ALARM CONTROL PANEL
FATC	FIRE ALARM TERMINAL CABINET
FLR	FLOOR
GFI	GROUND FAULT INTERRUPTER
GND	GROUND
IOR	INSPECTOR OF RECORD
LTG	LIGHTING
LTS	LIGHTS
MAX.	MAXIMUM
MIN.	MINIMUM
<N>	**NEW (BOLD)**
NAC	NETWORK AREA CONTROLLER
N.T.S.	NOT TO SCALE
OH	OVERHEAD
PEC	PROGRAMMABLE EQUIPMENT CONTROLLER
PNL	PANEL
<R>	REMOVE
<RRN>	REMOVE REPLACE W/ NEW
REC	RECEPTACLE
RM	ROOM
RPS	REMOTE POWER SUPPLY
SPB	SIGNAL PULL BOX
SPECS	SPECIFICATIONS
TYP	TYPICAL
TP	TWISTED PAIR (SHIELDED)
UG	UNDERGROUND
U.O.N.	UNLESS OTHERWISE NOTED
V	VOLT
VA	VOLT AMP
V.I.F.	VERIFY IN FIELD
W	WATTS
WP	WEATHERPROOF (NEMA 3R)

SALASO'BRIEN
expect a difference
3700 South Susan Street, Ste 150
Santa Ana, California 92704
949.517.4900 | 408.297.2995 (f)
salasobrien.com
California | Georgia | Louisiana
Montana | Texas | Washington
Licensed in 50 States

REGISTERED PROFESSIONAL ENGINEER — CHI KIT CHAN — No. E18090 — ELECTRICAL — STATE OF CALIFORNIA

SAN BERNARDINO COUNTY

800MHZ UPGRADES - CAJON PASS TOWER

WBSE #10.10.1011
CIP #20-225

ISSUE		
MARK	DATE	DESCRIPTION
	12/23/21	95% CD
	12/16/22	100% CD

SOBE PROJECT NO:	2002862
DATE:	12/16/22
DRAWN BY:	TP
CHECKED BY:	AC
APPROVED BY:	AC

SHEET TITLE

ELECTRICAL GENERAL NOTES, SYMBOLS & ABBREVIATIONS

SCALE: AS NOTED
THIS DRAWING IS 30" X 42" AT FULL SIZE

E-0.0

THIS DRAWING IS 30 X 42 AT FULL SIZE, 15 X 21 AT HALF SIZE. © 2015 BY SALAS O'BRIEN ENGINEERS, INC.

1/2" = 1'-0" 1/4" = 1'-0" 1/8" = 1'-0" 1" = 10'-0" 1" = 30'-0" 1" = 80'-0" 1" = 100'-0"

ELECTRICAL SPECIFICATIONS

2.4.3. A SOLID STATE UNDER VOLTAGE SENSOR SHALL MONITOR ALL PHASES OF THE NORMAL SOURCE AND PROVIDE ADJUSTABLE RANGES FOR FIELD ADJUSTMENTS FOR SPECIFIC APPLICATION NEEDS. PICK-UP AND DROP-OUT SETTINGS SHALL BE ADJUSTABLE FROM A MINIMUM OF 70% TO A MAXIMUM OF 95% OF NOMINAL VOLTAGE. A UTILITY SENSING INTERFACE SHALL BE USED, STEPPING DOWN SYSTEM VOLTAGE OF 208/120 VAC 3 PHASE TO 24VAC, HELPING TO PROTECT THE PRINTED CIRCUIT BOARD FROM VOLTAGE SPIKES AND INCREASING PERSONNEL SAFETY WHEN TROUBLESHOOTING.

2.4.4. SIGNAL THE ENGINE-GENERATOR SET TO START IN THE EVENT OF A POWER INTERRUPTION. A SET OF CONTACTS SHALL CLOSE TO START THE ENGINE AND OPEN FOR ENGINE SHUTDOWN. A SOLID STATE TIME DELAY START, ADJUSTABLE, .1 TO 10 SECONDS, SHALL DELAY THIS SIGNAL TO AVOID NUISANCE START-UPS ON MOMENTARY VOLTAGE DIPS OR POWER OUTAGES.

2.4.5. TRANSFER THE LOAD TO THE ENGINE-GENERATOR SET AFTER IT REACHED PROPER VOLTAGE, ADJUSTABLE FROM 70-90% OF SYSTEM VOLTAGE, AND FREQUENCY, ADJUSTABLE FROM 80-90% OF SYSTEM FREQUENCY. A SOLID STATE TIME DELAY, ADJUSTABLE FROM 5 SECONDS TO 3 MINUTES, SHALL DELAY THIS TRANSFER TO ALLOW THE ENGINE-GENERATOR TO WARM-UP BEFORE APPLICATION OF LOAD. THERE SHALL BE A SWITCH TO BYPASS THIS WARM-UP TIMER WHEN IMMEDIATE TRANSFER IS REQUIRED.

2.4.6. RETRANSFER THE LOAD TO THE LINE AFTER NORMAL POWER RESTORATION. A RETURN TO UTILITY TIMER, ADJUSTABLE FROM 1-30 MINUTES, SHALL DELAY THIS TRANSFER TO AVOID SHORT TERM NORMAL POWER RESTORATION.

2.4.7. THE OPERATING POWER FOR TRANSFER AND RETRANSFER SHALL BE OBTAINED FROM THE SOURCE TO WHICH THE LOAD IS BEING TRANSFERRED. CONTROLS SHALL PROVIDE AN AUTOMATIC RETRANSFER OF THE LOAD FROM EMERGENCY TO NORMAL IF THE EMERGENCY SOURCE FAILS WITH THE NORMAL SOURCE AVAILABLE.

2.4.8. SIGNAL THE ENGINE-GENERATOR TO STOP AFTER THE LOAD RETRANSFERS TO NORMAL. A SOLID STATE ENGINE COOL DOWN TIMER, ADJUSTABLE FROM 1-30 MINUTES, SHALL PERMIT THE ENGINE TO RUN UNLOADED TO COOLDOWN BEFORE SHUTDOWN. SHOULD THE UTILITY POWER FAIL DURING THIS TIME, THE SWITCH WILL IMMEDIATELY TRANSFER BACK TO THE GENERATOR.

2.4.9. PROVIDE AN ENGINE MINIMUM RUN TIMER, ADJUSTABLE FROM 5-30 MINUTES, TO ENSURE AN ADEQUATE ENGINE RUN PERIOD.

2.4.10. THE TRANSFER SWITCH SHALL HAVE A TIME DELAY NEUTRAL FEATURE TO PROVIDE A TIME DELAY, ADJUSTABLE FROM .1-10 SECONDS, DURING THE TRANSFER IN EITHER DIRECTION, DURING WHICH TIME THE LOAD IS ISOLATED FROM BOTH POWER SOURCES. THIS ALLOWS RESIDUAL VOLTAGE COMPONENTS OF MOTORS OR OTHER INDUCTIVE LOADS (SUCH AS TRANSFORMERS) TO DECAY BEFORE COMPLETING THE SWITCHING CYCLE. A SWITCH WILL BE PROVIDED TO BYPASS ALL TRANSITION FEATURES WHEN IMMEDIATE TRANSFER IS REQUIRED.

2.4.11. THE TRANSFER SWITCH SHALL HAVE AN IN PHASE MONITOR WHICH ALLOWS THE SWITCH TO TRANSFER BETWEEN LIVE SOURCES IF THEIR VOLTAGE WAVEFORMS BECOME SYNCHRONOUS WITHIN 20 ELECTRICAL DEGREES WITHIN 10 SECONDS OF TRANSFER INITIATION SIGNAL. A SWITCH MUST BE PROVIDED TO BYPASS THIS FEATURE IF NOT REQUIRED.

2.4.12. IF THE IN PHASE MONITOR WILL NOT ALLOW SUCH A TRANSFER, THE CONTROL MUST DEFAULT TO TIME DELAY NEUTRAL OPERATION. SWITCHES WITH IN PHASE MONITORS WHICH DO NOT DEFAULT TO TIME DELAY NEUTRAL OPERATION ARE NOT ACCEPTABLE.

2.4.13. FRONT MOUNTED CONTROLS SHALL INCLUDE A SELECTOR SWITCH TO PROVIDE FOR A NORMAL TEST MODE WITH FULL USE OF TIME DELAYS, FAST TEST MODE WHICH BYPASSES ALL TIME DELAYS TO ALLOW FOR TESTING THE ENTIRE SYSTEM IN LESS THAN ONE MINUTE, OR AUTOMATIC MODE TO SET THE SYSTEM FOR NORMAL OPERATION.

2.4.14. PROVIDE BRIGHT LAMPS TO INDICATE THE TRANSFER SWITCH POSITION IN EITHER UTILITY (WHITE) OR EMERGENCY (RED). A THIRD LAMP IS NEEDED TO INDICATE STANDBY OPERATING (AMBER). THESE LIGHTS MUST BE ENERGIZED FROM UTILITY OR THE ENGINE-GENERATOR SET.

2.4.15. PROVIDE MANUAL OPERATING HANDLE TO ALLOW FOR MANUAL TRANSFER. THIS HANDLE MUST BE MOUNTED INSIDE THE LOCKABLE ENCLOSURE SO ACCESSIBLE ONLY BY AUTHORIZED PERSONNEL.

2.4.16. PROVIDE A MAINTENANCE DISCONNECT SWITCH TO PREVENT LOAD TRANSFER AND AUTOMATIC ENGINE START WHILE PERFORMING MAINTENANCE. THIS SWITCH WILL ALSO BE USED FOR MANUAL TRANSFER SWITCH OPERATION.

2.4.17. PROVIDE LED STATUS LIGHTS TO GIVE A VISUAL READOUT OF THE OPERATING SEQUENCE. THIS SHALL INCLUDE UTILITY ON, ENGINE WARM-UP, STANDBY READY, TRANSFER TO STANDBY, IN PHASE MONITOR, TIME DELAY NEUTRAL, RETURN TO UTILITY, ENGINE COOL DOWN AND ENGINE MINIMUM RUN. A "SIGNAL BEFORE TRANSFER" LAMP SHALL BE SUPPLIED TO OPERATE FROM OPTIONAL CIRCUITRY.

2.5. MISCELLANEOUS TRANSFER SWITCH EQUIPMENT

2.5.1. THE TRANSFER SWITCH MECHANISM AND CONTROLS ARE TO BE MOUNTED IN A NEMA 3R ENCLOSURE.

5.4.3. THE FUEL TANK SHALL USE AN ELECTRIC FUEL SENSOR TO PROVIDE AN ANALOG INDICATION OF FUEL LEVEL. THE CONTROLLER SHALL HAVE A WARNING INDICATION ON LOW FUEL LEVEL AND PROVIDE OPTIONAL SHUTDOWN FUNCTIONALITY FOR LOW, LOW FUEL LEVEL.

5.4.4. THE FUEL TANK MUST BE SUPPLIED BY THE ENGINE-GENERATOR SET MANUFACTURER AND BE INSTALLED BEFORE SHIPMENT.

6. LOOSE ITEMS

6.1. SUPPLIER TO ITEMIZE LOOSE PARTS THAT REQUIRE SITE MOUNTING AND INSTALLATION. PREFERENCE WILL BE SHOWN FOR GENSETS THAT FACTORY MOUNT ITEMS LIKE MUFFLERS, BATTERY CHARGERS, ETC.

6.2. PAD TYPE VIBRATION ISOLATORS

7. ADDITIONAL PROJECT REQUIREMENTS

7.1. FACTORY TESTING

7.1.1. BEFORE SHIPMENT OF THE EQUIPMENT, THE ENGINE-GENERATOR SET SHALL BE TESTED UNDER RATED LOAD FOR PERFORMANCE AND PROPER FUNCTIONING OF CONTROL AND INTERFACING CIRCUITS. TESTS SHALL INCLUDE:

7.1.1.1. VERIFY VOLTAGE & FREQUENCY STABILITY.
7.1.1.2. VERIFY TRANSIENT VOLTAGE & FREQUENCY DIP RESPONSE.

7.2. OWNER'S MANUALS

7.2.1. THREE (3) SETS OF OWNER'S MANUALS SPECIFIC TO THE PRODUCT SUPPLIED MUST ACCOMPANY DELIVERY OF THE EQUIPMENT. GENERAL OPERATING INSTRUCTION, PREVENTIVE MAINTENANCE, WIRING DIAGRAMS, SCHEMATICS AND PARTS EXPLODED VIEWS SPECIFIC TO THIS MODEL MUST BE INCLUDED.

7.3 INSTALLATION

7.3.1 INSTALLATION WILL BE PROVIDED BY COUNTY PERSONNEL.

7.4 SERVICE

7.2.1. SUPPLIER OF THE GENSET AND ASSOCIATED ITEMS SHALL HAVE PERMANENT SERVICE FACILITIES IN THIS TRADE AREA. THESE FACILITIES SHALL COMPRISE A PERMANENT FORCE OF EGSA CERTIFIED AND FACTORY TRAINED SERVICE PERSONNEL ON 24 HOUR CALL, EXPERIENCED IN SERVICING THIS TYPE OF EQUIPMENT, PROVIDING WARRANTY AND ROUTINE MAINTENANCE SERVICE TO AFFORD THE OWNER MAXIMUM PROTECTION. DELEGATION OF THIS SERVICE RESPONSIBILITY FOR ANY OF THE EQUIPMENT LISTED HEREIN WILL NOT BE CONSIDERED FULFILLMENT OF THESE SPECIFICATIONS. SERVICE CONTRACTS SHALL ALSO BE AVAILABLE.

7.2.2. GENERATOR SUPPLIER'S SERVICE DEPARTMENT SHALL MAKE AVAILABLE TO THE OWNER ANY AND ALL SOFTWARE PROGRAMS AND PASSWORDS FOR ACCESSING THE GENERATOR CONTROLS AND SETTINGS THAT MAY BE REQUIRED DURING EMERGENCY SITUATIONS IN WHICH THE COUNTY SERVICE STAFF NEEDS TO GET AN "OUT OF SERVICE" GENSET BACK ON LINE WITH MINIMAL DELAY.

7.3. WARRANTY

7.3.1. THE STANDBY ELECTRIC GENERATING SYSTEM COMPONENTS, COMPLETE GENSET AND INSTRUMENTATION PANEL SHALL BE WARRANTED BY THE MANUFACTURER AGAINST DEFECTIVE MATERIALS AND FACTORY WORKMANSHIP FOR A PERIOD OF TEN (10) YEARS. THIS WARRANTY MUST BE COMPREHENSIVE TYPE COVERAGE TO INCLUDE PARTS, LABOR, AND TRAVEL EXPENSES FOR THE FULL 10 YEAR COVERAGE TERM WHICH SHALL START AT THE TIME OF INITIAL FACTORY PROVIDED START AND TEST.

7.3.2. THE WARRANTY PERIOD SHALL COMMENCE WHEN THE STANDBY POWER SYSTEM IS FIRST PLACED INTO SERVICE. MULTIPLE WARRANTIES FOR INDIVIDUAL COMPONENTS (ENGINE, ALTERNATOR, CONTROLS, ETC.) WILL NOT BE ACCEPTABLE. SATISFACTORY WARRANTY DOCUMENTS MUST BE PROVIDED. ALSO, IN THE JUDGMENT OF THE SPECIFYING AUTHORITY, THE MANUFACTURER SUPPLYING THE WARRANTY FOR THE COMPLETE SYSTEM MUST HAVE THE NECESSARY FINANCIAL STRENGTH AND TECHNICAL EXPERTISE WITH ALL COMPONENTS SUPPLIED TO PROVIDE ADEQUATE WARRANTY SUPPORT.

7.4. STARTUP AND CHECKOUT

7.4.1. THE SUPPLIER OF THE ELECTRIC GENERATING PLANT AND ASSOCIATED ITEMS COVERED HEREIN SHALL PROVIDE FACTORY TRAINED TECHNICIANS TO CHECKOUT THE COMPLETED INSTALLATION AND TO PERFORM AN INITIAL STARTUP INSPECTION TO INCLUDE:

7.4.1.1. ENSURING THE ENGINE STARTS (BOTH HOT AND COLD) WITHIN THE SPECIFIED TIME.

7.4.1.2. VERIFICATION OF ENGINE PARAMETERS WITHIN SPECIFICATION.

7.4.1.3. VERIFY NO LOAD FREQUENCY AND VOLTAGE, ADJUSTING IF REQUIRED.

7.4.1.4. TEST ALL AUTOMATIC SHUTDOWNS OF THE ENGINE-GENERATOR.

7.4.1.5. PERFORM A LOAD TEST OF THE ELECTRIC PLANT, ENSURING FULL LOAD FREQUENCY AND VOLTAGE ARE WITHIN SPECIFICATION BY USING BUILDING LOAD.

7.5. TRAINING

7.5.1. TRAINING IS TO BE SUPPLIED BY THE START-UP TECHNICIAN DURING COMMISSIONING. THE TRAINING SHOULD COVER BASIC GENERATOR OPERATION AND COMMON GENERATOR ISSUES THAT CAN BE MANAGED BY THE END-USER.

AUTOMATIC TRANSFER SWITCH

2.1. GENERAL

2.1.1. THE AUTOMATIC TRANSFER SWITCH SHALL BE FURNISHED BY THE MANUFACTURER OF THE ENGINE-GENERATOR SET SO AS TO MAINTAIN SYSTEM COMPATIBILITY AND LOCAL SERVICE RESPONSIBILITY FOR THE COMPLETE EMERGENCY POWER SYSTEM. IT SHALL BE LISTED BY UNDERWRITER'S LABORATORY, STANDARD 1008 WITH FUSE OR CIRCUIT BREAKER PROTECTION. REPRESENTATIVE PRODUCTION SAMPLES OF THE TRANSFER SWITCH SUPPLIED SHALL HAVE DEMONSTRATED THROUGH TESTS THE ABILITY TO WITHSTAND AT LEAST 10,000 MECHANICAL OPERATION CYCLES. ONE OPERATION CYCLE IS THE ELECTRICALLY OPERATED TRANSFER FROM NORMAL TO EMERGENCY AND BACK TO NORMAL. WIRING MUST COMPLY WITH NEC TABLE 312.6. THE MANUFACTURER SHALL FURNISH SCHEMATIC AND WIRING DIAGRAMS FOR THE PARTICULAR AUTOMATIC TRANSFER SWITCH AND A TYPICAL WIRING DIAGRAM FOR THE ENTIRE SYSTEM.

2.2. RATINGS & PERFORMANCE

2.2.1. THE AUTOMATIC TRANSFER SWITCH SHALL BE GE ZENITH ZTS SERIES, 3 POLES, 120/240 VOLTS, 100 AMPS. IT SHALL BE RATED FOR CONTINUOUS OPERATION IN AMBIENT TEMPERATURES OF -20 DEGREES FAHRENHEIT (-30 DEGREES CELSIUS) TO +140 DEGREES FAHRENHEIT (+60 DEGREES CELSIUS). MAIN POWER SWITCH CONTACTS SHALL BE RATED FOR 600 V AC MINIMUM. THE TRANSFER SWITCH SUPPLIED SHALL HAVE A MINIMUM WITHSTAND AND CLOSING RATING WHEN FUSE PROTECTED OF 200,000 AMPERES. WHERE THE LINE SIDE OVER CURRENT PROTECTION IS PROVIDED BY CIRCUIT BREAKERS, THE SHORT CIRCUIT WITHSTAND AND CLOSING RATINGS SHALL BE 14,000 AMPERES RMS. THESE RMS SYMMETRICAL FAULT CURRENT RATINGS SHALL BE THE RATING LISTED IN THE UL LISTING OR COMPONENT RECOGNITION PROCEDURES FOR THE TRANSFER SWITCH. ALL WITHSTAND TESTS SHALL BE PERFORMED WITH THE OVER CURRENT PROTECTIVE DEVICES LOCATED EXTERNAL TO THE TRANSFER SWITCH.

2.3. CONSTRUCTION

2.3.1. THE TRANSFER SWITCH SHALL BE DOUBLE THROW CONSTRUCTION, POSITIVELY ELECTRICALLY AND MECHANICALLY INTERLOCKED TO PREVENT SIMULTANEOUS CLOSING AND MECHANICALLY HELD IN BOTH NORMAL AND EMERGENCY POSITIONS. INDEPENDENT BREAK BEFORE MAKE ACTION SHALL BE USED TO POSITIVELY PREVENT DANGEROUS SOURCE TO SOURCE CONNECTIONS. WHEN SWITCHING THE NEUTRAL, THIS ACTION PREVENTS THE OBJECTIONABLE GROUND CURRENTS AND NUISANCE GROUND FAULT TRIPPING THAT CAN RESULT FROM OVERLAPPING DESIGNS. THE TRANSFER SWITCH SHALL BE APPROVED FOR MANUAL OPERATION. THE ELECTRICAL OPERATING MEANS SHALL BE BY ELECTRIC SOLENOID. EVERY PORTION OF THE CONTACTOR IS TO BE POSITIVELY MECHANICALLY CONNECTED. NO CLUTCH OR FRICTION DRIVE MECHANISM IS ALLOWED, AND PARTS ARE TO BE KEPT TO A MINIMUM. THIS TRANSFER SWITCH SHALL NOT CONTAIN INTEGRAL OVER CURRENT DEVICES IN THE MAIN POWER CIRCUIT, INCLUDING MOLDED CASE CIRCUIT BREAKERS OR FUSES.

2.3.2. THE TRANSFER SWITCH ELECTRICAL ACTUATOR SHALL HAVE AN INDEPENDENT DISCONNECT MEANS TO DISABLE THE ELECTRICAL OPERATION DURING MANUAL SWITCHING. MAXIMUM ELECTRICAL TRANSFER TIME IN EITHER DIRECTION SHALL BE 160 MILLISECONDS, EXCLUSIVE OF TIME DELAYS. MAIN SWITCH CONTACTS SHALL BE HIGH PRESSURE SILVER ALLOY WITH ARC CHUTES TO RESIST BURNING AND PITTING FOR LONG LIFE OPERATION.

2.3.3. THE TRANSFER SWITCH ELECTRICAL ACTUATOR SHALL HAVE AN INDEPENDENT DISCONNECT MEANS TO DISABLE THE ELECTRICAL OPERATION DURING MANUAL SWITCHING. MAXIMUM ELECTRICAL TRANSFER TIME IN EITHER DIRECTION SHALL BE 160 MILLISECONDS, EXCLUSIVE OF TIME DELAYS. MAIN SWITCH CONTACTS SHALL BE HIGH PRESSURE SILVER ALLOY WITH ARC CHUTES AND SEPARATE ARCING CONTACTS TO RESIST BURNING AND PITTING FOR LONG LIFE OPERATION.

2.4. CONTROLS

2.4.1. ALL CONTROL EQUIPMENT SHALL BE MOUNTED ON THE INSIDE OF THE CABINET DOOR IN A METAL LOCKABLE ENCLOSURE WITH TRANSPARENT SAFETY SHIELD TO PROTECT ALL SOLID STATE CIRCUIT BOARDS. THIS WILL ALLOW FOR EASE OF SERVICE ACCESS WHEN MAIN CABINET LOCKABLE DOOR IS OPEN, BUT TO PREVENT ACCESS BY UNAUTHORIZED PERSONNEL. CONTROL BOARDS SHALL HAVE INSTALLED COVER PLATES TO AVOID SHOCK HAZARD WHILE MAKING CONTROL ADJUSTMENTS. THE SOLID STATE VOLTAGE SENSORS AND TIME DELAY MODULES SHALL BE PLUG-IN CIRCUIT BOARDS WITH SILVER OR GOLD CONTACTS FOR EASE OF SERVICE.

2.7. ENGINE EXHAUST & INTAKE

THE ENGINE EXHAUST EMISSIONS SHALL MEET THE EPA EMISSION REQUIREMENTS FOR STANDBY POWER GENERATION.

2.7.1. THE MANUFACTURER SHALL SUPPLY ITS RECOMMENDED STAINLESS STEEL, FLEXIBLE CONNECTOR TO COUPLE THE ENGINE EXHAUST MANIFOLD TO THE EXHAUST SYSTEM. A RAIN CAP WILL TERMINATE THE EXHAUST PIPE AFTER THE SILENCER. ALL COMPONENTS MUST BE PROPERLY SIZED TO ASSURE OPERATION WITHOUT EXCESSIVE BACK PRESSURE WHEN INSTALLED.

2.7.2. THE MANUFACTURER SHALL SUPPLY A CRITICAL GRADE EXHAUST SILENCER AS STANDARD. FOR APPLICATIONS WITH SITE SPECIFIC SOUND REQUIREMENTS (REFERENCE SECTION 1.1), THE SILENCER SHALL BE SELECTED TO ACHIEVE SITE SOUND LEVELS.

2.7.3. FOR GENSETS IN A WEATHER OR SOUND ATTENUATED ENCLOSURE, ALL EXHAUST PIPING FROM THE TURBO-CHARGER DISCHARGE TO THE SILENCER SHALL BE THERMALLY WRAPPED TO MINIMIZE HEAT DISSIPATION INSIDE THE ENCLOSURE.

2.7.4. THE ENGINE INTAKE AIR IS TO BE FILTERED WITH ENGINE MOUNTED, REPLACEABLE, DRY ELEMENT FILTERS.

3. ALTERNATOR

3.1. THE ALTERNATOR SHALL BE THE VOLTAGE AND PHASE CONFIGURATION AS SPECIFIED IN SECTION 1.1.1.

3.2. THE ALTERNATOR SHALL BE A 4 POLE, REVOLVING FIELD, STATIONARY ARMATURE, SYNCHRONOUS MACHINE. THE EXCITATION SYSTEM SHALL UTILIZE A BRUSHLESS EXCITER WITH A SINGLE PHASE FULL WAVE RECTIFIER ASSEMBLY PROTECTED AGAINST ABNORMAL TRANSIENT CONDITIONS BY A SURGE PROTECTOR. PHOTO-SENSITIVE COMPONENTS WILL NOT BE PERMITTED IN THE ROTATING EXCITER.

3.3. THE ALTERNATOR SHALL INCLUDE A PERMANENT MAGNET GENERATOR (PMG) FOR EXCITATION SUPPORT. THE SYSTEM SHALL SUPPLY A MINIMUM SHORT CIRCUIT SUPPORT CURRENT OF 300% OF THE RATING (250% FOR 50HZ OPERATION) FOR 10 SECONDS.

3.4. THE ALTERNATOR SHALL SUPPORT 37 SKVA WITH A MAXIMUM VOLTAGE DIP OF 30 %.

3.5. SINGLE PHASE ALTERNATORS SHALL BE FOUR LEAD AND DEDICATED VOLTAGE DESIGNS. ALL LEADS MUST BE EXTENDED INTO A NEMA 1 CONNECTION BOX FOR EASY TERMINATION. A FULLY RATED, ISOLATED NEUTRAL CONNECTION MUST BE INCLUDED BY THE GENERATOR SET MANUFACTURER.

3.6. THE ALTERNATOR SHALL USE A SINGLE, SEALED BEARING DESIGN. THE ROTOR SHALL BE CONNECTED TO THE ENGINE FLYWHEEL USING FLEXIBLE DRIVE DISKS. THE STATOR SHALL BE DIRECT CONNECTED TO THE ENGINE TO ENSURE PERMANENT ALIGNMENT.

3.7. THE ALTERNATOR SHALL MEET TEMPERATURE RISE STANDARDS OF UL2200 (120 DEGREES C). THE INSULATION SYSTEM MATERIAL SHALL BE CLASS "H" CAPABLE OF WITHSTANDING 150 DEGREES C TEMPERATURE RISE.

3.8. THE ALTERNATOR SHALL BE PROTECTED AGAINST OVERLOADS AND SHORT CIRCUIT CONDITIONS BY ADVANCED CONTROL PANEL PROTECTIVE FUNCTIONS. THE CONTROL PANEL IS TO PROVIDE A TIME CURRENT ALGORITHM THAT PROTECTS THE ALTERNATOR AGAINST SHORT CIRCUITS. TO ENSURE PRECISION PROTECTION AND REPEATABLE TRIP CHARACTERISTICS, THESE FUNCTIONS MUST BE IMPLEMENTED ELECTRONICALLY IN THE GENERATOR CONTROL PANEL -- THERMAL MAGNETIC BREAKER IMPLEMENTATION ARE NOT ACCEPTABLE.

3.9. AN ALTERNATOR STRIP HEATER SHALL BE INSTALLED TO PREVENT MOISTURE CONDENSATION FROM FORMING ON THE ALTERNATOR WINDINGS. A TROPICAL COATING SHALL ALSO BE APPLIED TO THE ALTERNATOR WINDINGS TO PROVIDE ADDITIONAL PROTECTION AGAINST THE ENTRANCE OF MOISTURE.

4. CONTROLS

4.1. THE GENERATOR CONTROL SYSTEM SHALL BE A FULLY INTEGRATED MICROPROCESSOR BASED CONTROL SYSTEM FOR STANDBY EMERGENCY ENGINE GENERATORS MEETING ALL REQUIREMENTS OF NFPA 110 LEVEL 1.

4.2. THE GENERATOR CONTROL SYSTEM SHALL BE A FULLY INTEGRATED CONTROL SYSTEM ENABLING REMOTE DIAGNOSTICS AND EASY BUILDING MANAGEMENT INTEGRATION OF ALL GENERATOR FUNCTIONS. THE GENERATOR CONTROLLER SHALL PROVIDE INTEGRATED AND DIGITAL CONTROL OVER ALL GENERATOR FUNCTIONS INCLUDING: ENGINE PROTECTION, ALTERNATOR PROTECTION, SPEED GOVERNING, VOLTAGE REGULATION AND ALL RELATED GENERATOR OPERATIONS. THE GENERATOR CONTROLLER MUST ALSO PROVIDE SEAMLESS DIGITAL INTEGRATION WITH THE ENGINE'S ELECTRONIC ENGINE CONTROL MODULE (ECM) IF SO EQUIPPED. GENERATOR CONTROLLER'S THAT UTILIZE SEPARATE VOLTAGE REGULATORS AND SPEED GOVERNORS OR DO NOT PROVIDE SEAMLESS INTEGRATION WITH THE ENGINE MANAGEMENT SYSTEM ARE CONSIDERED LESS DESIRABLE.

4.3. COMMUNICATIONS SHALL BE SUPPORTED WITH BUILDING AUTOMATION VIA THE MODBUS PROTOCOL WITHOUT NETWORK CARDS. OPTIONAL INTERNET AND INTRANET CONNECTIVITY SHALL BE AVAILABLE.

4.4. THE CONTROL SYSTEM SHALL PROVIDE AN ENVIRONMENTALLY SEALED DESIGN INCLUDING ENCAPSULATED CIRCUIT BOARDS AND SEALED AUTOMOTIVE STYLE PLUGS FOR ALL SENSORS AND CIRCUIT BOARD CONNECTIONS. THE USE OF NON-ENCAPSULATED BOARDS, EDGE CARDS, AND PC RIBBON CABLE CONNECTIONS ARE CONSIDERED UNACCEPTABLE.

4.5. CIRCUIT BOARDS SHALL UTILIZE SURFACE MOUNT TECHNOLOGY TO PROVIDE VIBRATION DURABILITY. CIRCUIT BOARDS THAT UTILIZE LARGE CAPACITORS OR HEAT SINKS MUST UTILIZE ENCAPSULATION METHODS TO SECURELY SUPPORT THESE COMPONENTS.

4.6. A PREDICTIVE MAINTENANCE ALGORITHM THAT ALARMS WHEN MAINTENANCE IS REQUIRED. THE CONTROLLER SHALL HAVE THE CAPABILITY TO CALL OUT TO THE LOCAL SERVICING DEALER WHEN MAINTENANCE IS REQUIRED.

4.7. DIAGNOSTIC CAPABILITIES SHOULD INCLUDE TIME-STAMPED EVENT AND ALARM LOGS, ABILITY TO CAPTURE OPERATIONAL PARAMETERS DURING EVENTS, SIMULTANEOUS MONITORING OF ALL INPUT OR OUTPUT PARAMETERS, CALLOUT CAPABILITIES, SUPPORT FOR MULTI-CHANNEL DIGITAL STRIP CHART FUNCTIONALITY AND .2 MSEC DATA LOGGING CAPABILITIES.

4.8. IN ADDITION TO STANDARD NFPA 110 ALARMS, THE APPLICATION LOADS SHOULD ALSO BE PROTECTED THROUGH INSTANTANEOUS AND STEADY STATE PROTECTIVE SETTINGS ON SYSTEM VOLTAGE, FREQUENCY, AND POWER LEVELS.

4.9. THE CONTROL SYSTEM SHALL PROVIDE PRE-WIRED CUSTOMER USE I/O: 4 RELAY OUTPUTS (USER DEFINABLE FUNCTIONS), 4 CONTACT INPUTS, 2 ANALOG INPUTS, COMMUNICATIONS SUPPORT VIA RS232, RS485, OR AN OPTIONAL MODEM. ADDITIONAL I/O MUST BE AN AVAILABLE OPTION.

4.10. CUSTOMER I/O SHALL BE SOFTWARE CONFIGURABLE PROVIDING FULL ACCESS TO ALL ALARM, EVENT, DATA LOGGING, AND SHUTDOWN FUNCTIONALITY. IN ADDITION, CUSTOM LADDER LOGIC FUNCTIONALITY INSIDE THE GENERATOR CONTROLLER SHALL BE SUPPORTED TO PROVIDE APPLICATION SUPPORT FLEXIBILITY. THE LADDER LOGIC FUNCTION SHALL HAVE ACCESS TO ALL THE CONTROLLER INPUTS AND CUSTOMER ASSIGNABLE OUTPUTS.

4.11. THE CONTROL PANEL SHALL INCLUDE A DIGITAL DISPLAY FOR ALL USER PERTINENT UNIT PARAMETERS INCLUDING: ENGINE AND ALTERNATOR OPERATING CONDITIONS; OIL PRESSURE AND OPTIONAL OIL TEMPERATURE; COOLANT TEMPERATURE AND LEVEL ALARM; FUEL LEVEL (WHERE APPLICABLE); ENGINE SPEED; DC BATTERY VOLTAGE; RUN TIME HOURS; GENERATOR VOLTAGES, AMPS, FREQUENCY, KILOWATTS, AND POWER FACTOR; ALARM STATUS AND CURRENT ALARM(S) CONDITION PER NFPA 110 LEVEL 1.

4.12. GENERATOR PACKAGE SHALL INCLUDE AN ELECTRICAL LOAD CENTER RATED FOR 125 AMPS WITH THE CIRCUITS FOR THE BATTERY, CHARGER, JACKET WATER HEATER, AND STRIP HEATER PRE-WIRED.

5. ENGINE / ALTERNATOR PACKAGING

5.1. THE ENGINE/ALTERNATOR SHALL BE BOLTED DIRECTLY TO THE GENSET FRAME AND THE ENTIRE FRAME SHALL BE MOUNTED ON SPRING ISOLATORS. THE ENGINE/ALTERNATOR SHALL BE ISOLATED FROM THE GENERATOR FRAME WITH RUBBER ISOLATORS. THE PACKAGING SHALL NOT REQUIRE THE ADDITION OF EXTERNAL SPRING ISOLATORS.

5.2. A MAINLINE, THERMAL MAGNETIC CIRCUIT BREAKER CARRYING THE UL MARK SHALL BE FACTORY INSTALLED THE BREAKER SHALL BE RATED 100 AMPS. THE LINE SIDE CONNECTIONS ARE TO BE MADE AT THE FACTORY. OUTPUT LUGS SHALL BE PROVIDED FOR LOAD SIDE CONNECTIONS.

5.3. ENCLOSURE

5.3.1. THE GENSET SHALL BE PACKAGED WITH A LEVEL 2 SOUND ATTENUATING ENCLOSURE TO MEET THE 70.5 DBA SOUND LEVEL REQUIREMENT.

5.3.2. THE ENCLOSURE SHALL BE MADE OF STEEL [ALUMINUM] WITH A MINIMUM THICKNESS OF 14 GAUGE. THE ENCLOSURE IS TO HAVE HINGED, REMOVABLE DOORS TO ALLOW ACCESS TO THE ENGINE, ALTERNATOR AND CONTROL PANEL. THE HINGES SHALL ALLOW FOR DOOR FIT ADJUSTMENT. HINGES AND ALL EXPOSED FASTENERS WILL BE STAINLESS STEEL OR JS5000. THE USE OF POP-RIVETS WEAKENS THE PAINT SYSTEM AND NOT ALLOWED ON EXTERNAL PAINTED SURFACES. EACH DOOR WILL HAVE LOCKABLE HARDWARE WITH IDENTICAL KEYS.

5.3.3. THE ENCLOSURE SHALL BE COATED WITH ELECTROSTATIC APPLIED POWDER PAINT, BAKED AND FINISHED TO MANUFACTURER'S SPECIFICATIONS. THE COLOR WILL BE MANUFACTURER'S STANDARD.

5.3.4. THE SOUND ATTENUATED ENCLOSURE SHALL UTILIZE AN UPWARD DISCHARGING RADIATOR HOOD. THE ENCLOSURE SHALL BE COMPLETELY LINED WITH SOUND DEADENING MATERIAL. THIS MATERIAL MUST BE OF A SELF EXTINGUISHING DESIGN.

5.3.5. THE GENSET SILENCER SHALL BE MOUNTED ON THE TOP OF THE ENCLOSURE. DUE TO ARCHITECTURAL CONCERNS, AN OPTIONAL UPGRADE PRICE SHALL BE PROVIDED FOR PLACING A THERMALLY WRAPPED SILENCER INSIDE THE ENCLOSURE.

5.4. SUB-BASE FUEL TANK

5.4.1. THE PACKAGING SHALL INCLUDE A DOUBLE WALL, SUB-BASE MOUNTED, UL142 LISTED FUEL TANK. THE TANK SHALL BE 330 GALLON AND PROVIDE 71 HOURS OF RUN TIME AT FULL LOAD.

5.4.2. THE TANK SHALL INCLUDE FUEL SUCTION AND RETURN CONNECTIONS, NORMAL AND EMERGENCY VENTS, SECONDARY CONTAINMENT EMERGENCY VENT AND RUPTURE BASIN SENSOR, MECHANICAL FUEL LEVEL INDICATION AND A STUB-UP AREA CONVENIENT FOR ELECTRICAL CONDUIT ENTRY.

GENERATOR SPEC

ENGINE GENERATOR SPECIFICATION
(CAJON PASS)

1. GENERAL

1.1. DESCRIPTION OF SYSTEM & SITE

1.1.1. PROVIDE A 30 KW STANDBY POWER SYSTEM TO SUPPLY ELECTRICAL POWER AT 120/240 VOLTS, 60 HERTZ, SINGLE PHASE. THE GENERATOR SHALL CONSIST OF A LIQUID COOLED DIESEL ENGINE, A SYNCHRONOUS AC ALTERNATOR, AND SYSTEM CONTROLS WITH ALL NECESSARY ACCESSORIES FOR A COMPLETE OPERATING SYSTEM, INCLUDING BUT NOT LIMITED TO THE ITEMS AS SPECIFIED HEREINAFTER.

1.1.2. THE SITE IS AN NEC ORDINARY LOCATION WITH NO SPECIFIC HARSH ENVIRONMENT REQUIREMENTS.

1.1.3. THE GENSET SHALL BE APPLIED AT THE LISTED AMBIENT AND ELEVATION. BIDDERS TO SUBMIT THE GENERATORS RATED POWER OUTPUT AT 115 AMBIENT (°F) AND 4800 ELEVATION (FT).

1.1.4. BIDDERS ARE TO SUBMIT THE GENSET'S SOUND LEVEL VERIFYING 70 DBA AT 23 FT BASED ON THE CONFIGURATION SPECIFIED.

1.2. REQUIREMENTS OF REGULATORY AGENCIES

1.2.1. AN ELECTRIC GENERATING SYSTEM, CONSISTING OF A PRIME MOVER, GENERATOR, GOVERNOR, COUPLING AND ALL CONTROLS, MUST HAVE BEEN TESTED, AS A COMPLETE UNIT, ON A REPRESENTATIVE ENGINEERING PROTOTYPE MODEL OF THE EQUIPMENT TO BE SOLD.

1.2.2. THE GENERATOR SET MUST CONFORM TO APPLICABLE NFPA REQUIREMENTS.

1.2.3. THE GENERATOR SET MUST BE AVAILABLE WITH THE UNDERWRITERS LABORATORIES LISTING (UL2200) FOR A STATIONARY ENGINE GENERATOR ASSEMBLY.

1.2.4. THE GENERATOR SET MUST MEET EPA FEDERAL EMISSION GUIDELINES FOR STATIONARY STANDBY POWER GENERATION.

1.2.5. THE GENERATOR SET MUST MEET AQMD REQUIREMENT.

1.3. MANUFACTURER QUALIFICATIONS

1.3.1. THIS SYSTEM SHALL BE SUPPLIED BY AN ORIGINAL EQUIPMENT MANUFACTURER (OEM) WHO HAS BEEN REGULARLY ENGAGED IN THE PRODUCTION OF ENGINE-ALTERNATOR SETS, AUTOMATIC TRANSFER SWITCHES, AND ASSOCIATED CONTROLS FOR A MINIMUM OF 25 YEARS, THEREBY IDENTIFYING ONE SOURCE OF SUPPLY AND RESPONSIBILITY. APPROVED SUPPLIERS ARE GENERAC INDUSTRIAL POWER.

1.3.2. THE MANUFACTURER SHALL HAVE PRINTED LITERATURE AND BROCHURES DESCRIBING THE STANDARD SERIES SPECIFIED, NOT A ONE OF A KIND FABRICATION.

1.3.3. MANUFACTURER'S AUTHORIZED SERVICE REPRESENTATIVE SHALL MEET THE FOLLOWING CRITERIA:
1.3.3.1. CERTIFIED, FACTORY TRAINED, INDUSTRIAL GENERATOR TECHNICIANS
1.3.3.2. SERVICE SUPPORT 24/7
1.3.3.3. SERVICE LOCATION WITHIN 200 MILES
1.3.3.4. RESPONSE TIME OF 4 HOURS
1.3.3.5. SERVICE & REPAIR PARTS IN-STOCK AT PERFORMANCE LEVEL OF 95%
1.3.3.6. OFFER OPTIONAL REMOTE MONITORING AND DIAGNOSTIC CAPABILITIES

1.4. SUBMITTALS

1.4.1. ENGINE GENERATOR SPECIFICATION SHEET
1.4.2. CONTROLS SPECIFICATION SHEET(S)
1.4.3. INSTALLATION / LAYOUT DIMENSIONAL DRAWING
1.4.4. WIRING SCHEMATIC
1.4.5. SOUND DATA
1.4.6. EMISSION CERTIFICATION
1.4.7. WARRANTY STATEMENT

2. ENGINE

2.1. ENGINE RATING AND PERFORMANCE

2.1.1. THE PRIME MOVER SHALL BE A LIQUID COOLED, DIESEL FUELED, TURBOCHARGED AFTER-COOLED ENGINE OF 4-CYCLE DESIGN. IT WILL HAVE ADEQUATE HORSEPOWER TO ACHIEVE RATED KW OUTPUT WITH AT AN OPERATING SPEED OF 1800 RPM.

2.1.2. THE ENGINE SHALL SUPPORT A 100% LOAD STEP.

2.1.3. THE GENERATOR SYSTEM SHALL SUPPORT GENERATOR START-UP AND LOAD TRANSFER WITHIN 10 SECONDS.

2.2. ENGINE OIL SYSTEM

2.2.1. FULL PRESSURE LUBRICATION SHALL BE SUPPLIED BY A POSITIVE DISPLACEMENT LUBE OIL PUMP. THE ENGINE SHALL HAVE A REPLACEABLE OIL FILTER(S) WITH INTERNAL BYPASS AND REPLACEABLE ELEMENT(S).

2.2.2. THE ENGINE SHALL OPERATE ON MINERAL BASED OIL. SYNTHETIC OILS SHALL NOT BE REQUIRED.

2.2.3. THE OIL SHALL BE COOLED BY A OIL COOLER WHICH IS INTEGRATED INTO THE ENGINE SYSTEM.

2.3. ENGINE COOLING SYSTEM

2.3.1. THE ENGINE IS TO BE COOLED WITH A UNIT MOUNTED RADIATOR, FAN, WATER PUMP, AND CLOSED COOLANT RECOVERY SYSTEM. THE COOLANT SYSTEM SHALL INCLUDE A COOLANT FILL BOX WHICH WILL PROVIDE VISUAL MEANS TO DETERMINE IF THE SYSTEM HAS ADEQUATE COOLANT LEVEL. THE RADIATOR SHALL BE DESIGNED FOR OPERATION IN 122 DEGREES F, (50 DEGREES C) AMBIENT TEMPERATURE.

2.3.2. THE ENGINE SHALL HAVE (A) UNIT MOUNTED, THERMOSTATICALLY CONTROLLED WATER JACKET HEATER(S) TO AID IN QUICK STARTING. THE WATTAGE SHALL BE AS RECOMMENDED BY THE MANUFACTURER.

2.3.3. ENGINE COOLANT AND OIL DRAIN EXTENSIONS, EQUIPPED WITH PIPE PLUGS AND SHUT-OFF VALVES, MUST BE PROVIDED TO THE OUTSIDE OF THE MOUNTING BASE FOR CLEANER AND MORE CONVENIENT ENGINE SERVICING.

2.3.4. A RADIATOR FAN GUARD MUST BE INSTALLED FOR PERSONNEL SAFETY THAT MEETS UL AND OSHA SAFETY REQUIREMENTS.

2.4. ENGINE STARTING SYSTEM

2.4.1. STARTING SHALL BE BY A SOLENOID SHIFT, DC STARTING SYSTEM.

THE ENGINE'S CRANKING BATTERIES SHALL BE LEAD ACID. THE BATTERIES SHALL BE SIZED PER THE MANUFACTURER'S RECOMMENDATIONS. THE BATTERIES SUPPLIED SHALL MEET NFPA 110 CRANKING REQUIREMENTS OF 90 SECONDS OF TOTAL CRANK TIME. BATTERY SPECIFICATIONS (TYPE, AMP-HOUR RATING, COLD CRANKING AMPS) TO BE PROVIDED IN THE SUBMITTAL.

2.4.2. THE GENSET SHALL HAVE AN ENGINE DRIVEN, BATTERY CHARGING ALTERNATOR WITH INTEGRATED VOLTAGE REGULATION.

2.4.3. THE GENSET SHALL HAVE AN AUTOMATIC DUAL RATE, FLOAT EQUALIZE, 10 AMP BATTERY CHARGER. THE CHARGER MUST BE PROTECTED AGAINST A REVERSE POLARITY CONNECTION. THE CHARGERS CHARGING CURRENT SHALL BE MONITORED WITHIN THE GENERATOR CONTROLLER TO SUPPORT REMOTE MONITORING AND DIAGNOSTICS. THE BATTERY CHARGER IS TO BE FACTORY INSTALLED ON THE GENERATOR SET. DUE TO LINE VOLTAGE DROP CONCERNS, A BATTERY CHARGER MOUNTED IN THE TRANSFER SWITCH WILL BE UNACCEPTABLE.

2.5. ENGINE FUEL SYSTEM

2.5.1. THE ENGINE FUEL SYSTEM SHALL BE DESIGNED FOR OPERATION ON #2 DIESEL FUEL AND COLD WEATHER DIESEL BLENDS.

2.5.2. THE ENGINE SHALL INCLUDE A PRIMARY FUEL FILTER, WATER SEPARATOR, MANUAL FUEL PRIMING PUMP, AND ENGINE FLEXIBLE FUEL LINES MUST BE INSTALLED AT THE POINT OF MANUFACTURE. ELEMENT SHALL BE REPLACEABLE PAPER TYPE.

2.5.3. THE ENGINES SUCTION LINE SHALL BE FITTED WITH A CHECK VALVE TO SECURE PRIME FOR THE ENGINES INJECTION PUMP.

2.6. ENGINE CONTROLS

2.6.1. ENGINES THAT ARE EQUIPPED WITH AN ELECTRONIC ENGINE CONTROL MODULE (ECM), SHALL MONITOR AND CONTROL ENGINE FUNCTIONALITY AND SEAMLESSLY INTEGRATE WITH THE GENSET CONTROLLER THROUGH DIGITAL COMMUNICATIONS. ECM MONITORED PARAMETERS SHALL BE INTEGRATED INTO THE GENSET CONTROLLERS NFPA 110 ALARM AND WARNING REQUIREMENTS. ALL ECM FAULT CODES SHALL BE DISPLAYED AT THE GENSET CONTROLLER IN STANDARD LANGUAGE - FAULT CODE NUMBERS ARE NOT ACCEPTABLE.

2.6.2. FOR ENGINES WITHOUT ECM FUNCTIONALITY OR FOR ANY ADDITIONAL GENSET CONTROLLER MONITORING, SENSORS ARE TO BE CONDITIONED TO A 4-20MA SIGNAL LEVEL TO ENHANCE NOISE IMMUNITY AND ALL SENSOR CONNECTIONS SHALL BE SEALED TO PREVENT CORROSION.

2.6.3. ENGINE SPEED SHALL BE CONTROLLED WITH AN INTEGRATED ISOCHRONOUS GOVERNOR FUNCTION WITH NO CHANGE IN ALTERNATOR FREQUENCY FROM NO LOAD TO FULL LOAD. STEADY STATE REGULATION IS TO BE 0.25%.

GENERAL PROVISIONS:

1. FURNISH ALL LABOR, MATERIALS, APPARATUS, TOOLS, EQUIPMENT, TRANSPORTATION, TEMPORARY CONSTRUCTION AND SPECIAL OR OCCASIONAL SERVICES AS REQUIRED TO MAKE A COMPLETE WORKING ELECTRICAL INSTALLATION, AS SHOWN ON THE DRAWINGS OR DESCRIBED IN THESE SPECIFICATIONS.
2. STRUCTURAL MEMBERS SHALL IN NO CASE BE DRILLED, BORED OR NOTCHED IN SUCH A MANNER THAT WILL IMPAIR THEIR STRUCTURAL VALUE. CUTTING OF HOLES, IF REQUIRED, SHALL BE DONE WITH CORE DRILL AND ONLY WITH THE APPROVAL OF THE ENGINEER. THE CONTRACTOR SHALL BE RESPONSIBLE FOR RETURNING ANY SURFACE FROM WHICH HE HAS REMOVED EQUIPMENT OR DEVICES TO THE CONDITION AND FINISH OF THE ADJACENT SURFACES.
3. KEEP CONDUITS, JUNCTION BOXES, AND OUTLET BOXES, AND OTHER OPENINGS CLOSED TO PREVENT ENTRY OF FOREIGN MATTER: COVER FIXTURES, EQUIPMENT, AND APPARATUS AND PROTECT AGAINST DIRT, PAINT, WATER, CHEMICAL, OR MECHANICAL DAMAGE, BEFORE AND DURING CONSTRUCTION PERIOD. RESTORE TO ORIGINAL CONDITION ANY FIXTURE, APPARATUS, OR EQUIPMENT DAMAGED PRIOR TO FINAL ACCEPTANCE, INCLUDING RESTORATION OF DAMAGED SHOP COATS OF PAINT, BEFORE FINAL ACCEPTANCE. PROTECT BRIGHT FINISHED SURFACES AND SIMILAR ITEMS UNTIL IN SERVICE. NO RUST OR DAMAGE WILL BE PERMITTED.
4. DRAWINGS FOR THE WORK UNDER THIS SECTION ARE DIAGRAMMATIC. THE CONTRACTOR SHALL VISIT THE SITE AND DETERMINE THE LOCALE, WORKING CONDITIONS, CONFLICTING UTILITIES, AND THE CONDITIONS IN WHICH THE ELECTRICAL WORK WILL TAKE PLACE.
5. CONTRACTOR SHALL INSURE RECONNECTION OF EXISTING EQUIPMENT AND CIRCUITS AFFECTED BY CONTRACT DEMOLITION WHETHER OR NOT RECONNECTION IS SPECIFICALLY SHOWN ON THE CONTRACT DOCUMENTS.
6. INSTALLATION SHALL BE IN ACCORDANCE WITH MANUFACTURER'S WRITTEN INSTRUCTIONS AND TECHNICAL DATA PARTICULAR TO THE PRODUCT SPECIFIED AND/OR ACCEPTED EQUAL EXCEPT AS OTHERWISE SPECIFIED AND IN ACCORDANCE WITH THE NATIONAL ELECTRICAL CONTRACTOR'S ASSOCIATION "STANDARD OF INSTALLATION" FOR GENERAL INSTALLATION PRACTICE.

BASIC MATERIALS AND METHODS:

1. RIGID STEEL CONDUIT SHALL BE FULL WEIGHT, PIPE SIZE, FINISHED INSIDE AND OUT BY HOT-DIP GALVANIZING AFTER FABRICATION, AND SHALL CONFORM WITH ANSI C80.1 AND UL.
   a. USE RIGID STEEL CONDUIT FOR THE FOLLOWING LOCATIONS OR CONDITIONS: ALL EXTERIOR APPLICATIONS, ALL CONDUITS LARGER THAN 2" TRADE DIAMETER, AND ALL CONDUITS INDOOR BELOW EIGHT (8) FEET ABOVE FINISHED FLOOR.
   b. COUPLINGS SHALL BE ELECTROPLATED STEEL. INSULATING BUSHINGS: THREADED POLYPROPYLENE OR THERMO-SETTING PHENOLIC RATED 150°C MINIMUM. INSULATED GROUNDING BUSHINGS: THREADED CAST MALLEABLE IRON BODY WITH INSULATED THROAT AND STEEL "LAY-IN" GROUND LUG WITH COMPRESSION SCREW. INSULATED METALLIC BUSHINGS: THREADED CAST MALLEABLE IRON BODY WITH PLASTIC INSULATED THROAT RATED 150°C. RUNNING THREADS ARE NOT ACCEPTABLE.
2. ELECTRICAL METALLIC TUBING (EMT) SHALL BE FORMED OF COLD ROLLED STRIP STEEL, AND SHALL COMPLY WITH ANSI C80.3 AND UL REQUIREMENTS.
   a. EMT IS ALLOWED FOR THE FOLLOWING CONDITIONS: INTERIOR (2" AND SMALLER) ONLY AND ABOVE EIGHT (8) FEET FROM FINISHED FLOOR AND INTERIOR ONLY AND WHEN ENTERING A PANEL FROM ABOVE.
   b. COUPLINGS: ELECTROPLATED STEEL, UL LISTED RAIN AND CONCRETE TIGHT THROUGH 1-1/4" TRADE SIZE. ALL EMT FITTINGS SHALL BE COMPRESSION TYPE. CONNECTORS: STEEL, GLAND COMPRESSION TYPE WITH INSULATED PLASTIC THROAT, 150°C TEMPERATURE RATED. ALL EMT FITTINGS SHALL BE COMPRESSION TYPE.
3. LIQUID TIGHT FLEXIBLE METAL CONDUIT SHALL BE FABRICATED IN CONTINUOUS LENGTHS FROM GALVANIZED STEEL STRIP, SPIRALLY WOUND. FLEXIBLE CONDUIT, EXCEPT WHERE INSTALLED IN CONCEALED DRY LOCATIONS, SHALL BE LIQUID TIGHT WITH PLASTIC JACKET EXTRUDED OVER THE OUTER ZINC COATING. NO ALUMINUM SUBSTITUTE WILL BE ACCEPTED.
   a. USE LIQUIDTIGHT FOR THE FOLLOWING CONDITIONS: IN DAMP AND WET LOCATIONS FOR CONNECTIONS TO MOTORS, TRANSFORMERS, VIBRATING EQUIPMENT AND MACHINERY AND FOR CONNECTIONS TO ALL PUMP MOTORS, FLOW SWITCHES, AND SIMILAR DEVICES.
   b. CONNECTORS SHALL BE THE SCREW CLAMP ON SCREW-IN (JAKE) VARIETY WITH CAST MALLEABLE IRON BODIES AND THREADED MALE HUBS WITH INSULATED THROAT OR INSULATED BUSHINGS. SET SCREW TYPE CONNECTORS ARE NOT ACCEPTABLE. LIQUID TIGHT FITTINGS SHALL BE OF CADMIUM PLATED CAST MALLEABLE IRON, WITH INSULATED THROAT.
4. LOW VOLTAGE WIRING SHALL BE INSTALLED IN CONDUIT, MINIMUM 3/4" TRADE DIAMETER.
5. CONDUITS SHALL BE TIGHTLY COVERED AND WELL PROTECTED DURING CONSTRUCTION USING METALLIC BUSHINGS AND BUSHING "PENNIES" TO SEAL OPEN ENDS. IN MAKING JOINTS IN RIGID STEEL CONDUIT, REAM CONDUIT SMOOTH AFTER CUTTING AND THREADING. CLEAN ANY CONDUIT IN WHICH MOISTURE OR ANY FOREIGN MATTER HAS COLLECTED BEFORE PULLING IN CONDUCTORS. PAINT ALL FIELD THREADED JOINTS TO PREVENT CORROSION.
6. CONDUIT SYSTEMS SHALL BE ELECTRICALLY CONTINUOUS THROUGHOUT. INSTALL CODE SIZE, UNINSULATED, COPPER GROUNDING CONDUCTORS IN ALL CONDUIT RUNS, GROUNDING CONDUCTOR SHALL BE BONDED TO CONDUIT, EQUIPMENT FRAMES AND PROPERLY GROUNDED.
7. LOW VOLTAGE CONDUIT SHALL BE GROUPED SEPARATELY AND LABELED EVERY 10 FT INTERVAL AS TO SYSTEM (I.E. FIRE, CONTROL, ETC)
8. EXPOSED CONDUIT SHALL BE RUN PARALLEL OR AT RIGHT ANGLES TO THE CENTERLINES OF THE COLUMNS AND BEAMS. CONDUITS SHALL NOT BE PLACED CLOSER THAN 12 INCHES FROM A PARALLEL HOT WATER OR STEAM LINE OR THREE INCHES FROM SUCH LINES CROSSING PERPENDICULAR TO THE RUNS. IN LONG RUNS OF CONDUIT, PROVIDE SUFFICIENT PULL BOXES PER NEC INSIDE BUILDINGS TO FACILITATE PULLING WIRES AND CABLES. SUPPORT PULL BOXES FROM STRUCTURE INDEPENDENT OF CONDUIT SUPPORTS. THESE PULL BOXES ARE NOT SHOWN ON THE PLANS.
9. ALL RACEWAY SYSTEMS SHALL BE SECURED TO BUILDING STRUCTURES USING SPECIFIED FASTENERS, CLAMPS AND HANGERS SPACED ACCORDING TO CODE. SUPPORT SINGLE RUNS OF CONDUIT USING TWO HOLE PIPE STRAPS. WHERE RUN HORIZONTALLY ON WALLS IN DAMP OR WET LOCATIONS, INSTALL "CLAMP BLOCKS" TO SPACE CONDUIT OFF THE SURFACE. MULTIPLE CONDUIT RUNS SHALL BE SUPPORTED USING "TRAPEZE" HANGERS FABRICATED FROM 3/8 INCH DIAMETER, THREADED STEEL RODS SECURED TO BUILDING STRUCTURES. FASTEN CONDUIT TO CONSTRUCTION CHANNEL WITH STANDARD TWO HOLE PIPE CLAMPS. PROVIDE LATERAL SEISMIC BRACING FOR HANGERS.
10. LOCATE AND INSTALL ANCHORS, FASTENERS, AND SUPPORTS IN ACCORDANCE WITH NECA "STANDARD OF INSTALLATION". DO NOT FASTEN SUPPORTS TO PIPES, DUCTS, MECHANICAL EQUIPMENT, OR CONDUIT. DO NOT DRILL OR CUT STRUCTURAL MEMBERS. RIGIDLY WELD SUPPORT MEMBERS OR USE HEXAGON-HEAD BOLTS TO PRESENT NEAT APPEARANCE WITH ADEQUATE STRENGTH AND RIGIDITY. USE SPRING LOCK WASHERS UNDER ALL NUTS.
11. RACEWAYS SHALL BE JOINED USING SPECIFIED COUPLINGS OR TRANSITION COUPLINGS WHERE DISSIMILAR RACEWAY SYSTEMS ARE JOINED. RIGID CONDUIT CONNECTION TO ENCLOSURES SHALL BE MADE BY MYERS TYPE GROUNDING HUBS ONLY. EMT CONNECTIONS TO ENCLOSURES SHALL BE MADE WITH COMPRESSION CONNECTOR WITH GROUNDING LOCK-NUTS OR BUSHINGS. INSTALL CABLE SEALING BUSHINGS OR CAULK CONDUIT TERMINATIONS IN ALL GRADE LEVEL OR BELOW GRADE EXTERIOR PULL, JUNCTION OR OUTLET BOXES.
12. FURNISH AND INSTALL METAL SLEEVES FOR ALL EXPOSED INTERIOR CONDUIT RUNS PASSING THROUGH CONCRETE FLOORS OR WALLS. FOLLOWING CONDUIT INSTALLATION, SEAL ALL PENETRATIONS USING NON-IRON BEARING, CHLORIDE FREE, NON-SHRINKING, DRY-PACK, GROUTING COMPOUND.
13. CONDUITS PENETRATING RATED WALLS, FLOORS, ETC. SHALL BE FIREPROOFED.
14. FOR EXISTING CONDUITS THAT WILL BE REUSED, PULL OUT EXISTING CONDUCTORS AND COMPLETELY AND THOROUGHLY SWAB RACEWAY BEFORE INSTALLING WIRE. USE 50/50 SOLUTION OF SIMPLE GREEN. USE CO2 TO BLOW WATER AND SOAP INTO CONDUIT - LET SOAK TO BREAK UP DRIED OUT PULLING COMPOUNDS, THEN PULL CONDUCTORS. PULL ONE CONDUCTOR AT A TIME IF WILL NOT PULL ALL OUT TOGETHER.
15. CONDUCTORS SHALL BE MANUFACTURED BY SOUTHWIRE. ALL WIRE AND CABLE SHALL BE INSULATED, COPPER CONDUCTORS, SOFT DRAWN ANNEALED COPPER WIRE 98% CONDUCTIVITY, BEARING THE UL LABEL.
16. WIRE AND CABLE, 0 TO 600 VOLT SHALL BE NEC TYPE THWN, OR TYPE XHHW FOR FEEDERS AND BRANCH CIRCUITS IN WET OR DRY LOCATIONS. NEC TYPE THHN FOR BRANCH CIRCUITS IN DRY LOCATIONS. MINIMUM CONDUCTOR SIZE: AWG NO. 12 FOR ALL POWER AND LIGHTING BRANCH CIRCUITS. AWG NO. 14 FOR ALL SIGNAL AND CONTROL CIRCUITS.
17. COLOR CODING: SYSTEM CONDUCTORS SHALL BE IDENTIFIED AS TO VOLTAGE AND PHASE CONNECTIONS BY MEANS OF COLOR IMPREGNATED INSULATION OR APPROVED COLORED MARKING TAPE AS FOLLOWS:
   a. 120/240 VOLT, SINGLE PHASE, 3 WIRE SYSTEM. PHASE A - BLACK, PHASE B - RED, PHASE C - ORANGE FOR HIGH LEG (208V TO NEUTRAL), NEUTRAL - WHITE, GROUND - GREEN.
   b. 120/208 VOLT, 3 PHASE, 4 WIRE SYSTEMS. PHASE A - BLACK, PHASE B - RED, PHASE C - BLUE, NEUTRAL - WHITE, GROUND - GREEN
   c. 277/480 VOLT, 3 PHASE, 4 WIRE SYSTEM. PHASE A - BROWN, PHASE B - ORANGE, PHASE C - YELLOW, NEUTRAL - GREY, GROUND - GREEN
18. U.L. APPROVED NON-PETROLEUM BASE AND INSULATING TYPE PULLING COMPOUND SHALL BE USED AS NEEDED. ALL CABLES SHALL BE INSTALLED AND TESTED IN ACCORDANCE WITH MANUFACTURER'S REQUIREMENTS AND WARRANTY. BLOCK AND TACKLE, POWER DRIVEN WINCH OR OTHER MECHANICAL MEANS SHALL NOT BE USED IN PULLING CONDUCTORS OF SIZE SMALLER THAN AWG # 1.
19. SPLICING AND TERMINATING SHALL BE IN ACCORDANCE WITH CABLE MANUFACTURER'S PUBLISHED PROCEDURES. MAKE UP ALL SPLICES IN OUTLET BOXES WITH CONNECTORS AS SPECIFIED HEREIN WITH SEPARATE TAILS OF CORRECT COLOR TO BE MADE UP TO SPLICE. PROVIDE AT LEAST SIX (6) INCHES OF TAILS PACKED IN BOX AFTER SPLICE IS MADE UP. ALL WIRE AND CABLE IN PANELS, CONTROL CENTERS AND EQUIPMENT ENCLOSURES SHALL BE BUNDLED AND CLAMPED. ENCAPSULATE SPLICES IN EXTERIOR OUTLET, JUNCTION AND PULL BOXES USING INSULATING RESIN KITS. ALL SPLICES FOR EXTERIOR EQUIPMENT IN PUMP ROOMS SHALL BE MADE UP WATERTIGHT.
20. ROUTE WIRE AND CABLE AS REQUIRED TO MEET PROJECT CONDITIONS. WIRE AND CABLE ROUTING INDICATED IS APPROXIMATE UNLESS DIMENSIONED. WHERE WIRE AND CABLE DESTINATION IS INDICATED AND ROUTING IS NOT SHOWN, DETERMINE EXACT ROUTING AND LENGTHS REQUIRED. INCLUDE WIRE AND CABLE OF LENGTHS REQUIRED TO INSTALL CONNECTED DEVICES WITHIN 10 FT OF LOCATION SHOWN.
21. PROTECT EXPOSED CABLE FROM DAMAGE. SUPPORT CABLES ABOVE ACCESSIBLE CEILING, USING SPRING METAL CLIPS OR METAL CABLE TIES TO SUPPORT CABLES FROM STRUCTURE OR CEILING SUSPENSION SYSTEM. DO NOT REST CABLE ON CEILING PANELS. USE SUITABLE CABLE FITTINGS AND CONNECTORS. CLEAN CONDUCTOR SURFACES BEFORE INSTALLING LUGS AND CONNECTORS. MAKE SPLICES, TAPS, AND TERMINATIONS TO CARRY FULL AMPACITY OF CONDUCTORS WITH NO PERCEPTIBLE TEMPERATURE RISE. USE SUITABLE REDUCING CONNECTORS OR MECHANICAL CONNECTOR ADAPTORS FOR CONNECTING ALUMINUM CONDUCTORS TO COPPER CONDUCTORS. USE SPLIT BOLT CONNECTORS FOR COPPER CONDUCTOR SPLICES AND TAPS, 6 AWG AND LARGER. TAPE UNINSULATED CONDUCTORS AND CONNECTOR WITH ELECTRICAL TAPE TO 150 PERCENT OF INSULATION RATING OF CONDUCTOR. USE SOLDERLESS PRESSURE CONNECTORS WITH INSULATING COVERS FOR COPPER CONDUCTOR SPLICES AND TAPS, 8 AWG AND SMALLER. USE INSULATED SPRING WIRE CONNECTORS WITH PLASTIC CAPS FOR COPPER CONDUCTOR SPLICES AND TAPS, 10 AWG AND SMALLER.
22. MAKE ELECTRICAL CONNECTIONS IN ACCORDANCE WITH EQUIPMENT MANUFACTURER'S INSTRUCTIONS. FOR CONDUIT CONNECTIONS TO EQUIPMENT USE FLEXIBLE CONDUIT. USE LIQUIDTIGHT FLEXIBLE CONDUIT WITH WATERTIGHT CONNECTORS IN DAMP OR WET LOCATIONS. CONNECT HEAT PRODUCING EQUIPMENT USING WIRE AND CABLE WITH INSULATION SUITABLE FOR TEMPERATURES ENCOUNTERED.
23. INSTALL SUITABLE STRAIN-RELIEF CLAMPS AND FITTINGS FOR CORD CONNECTIONS AT OUTLET BOXES AND EQUIPMENT CONNECTION BOXES. INSTALL DISCONNECT SWITCHES, CONTROLLERS, CONTROL STATIONS, AND CONTROL DEVICES TO COMPLETE EQUIPMENT WIRING REQUIREMENTS. INSTALL TERMINAL BLOCK JUMPERS TO COMPLETE EQUIPMENT WIRING REQUIREMENTS. INSTALL INTERCONNECTING CONDUIT AND WIRING BETWEEN DEVICES AND EQUIPMENT TO COMPLETE EQUIPMENT WIRING REQUIREMENTS.
24. INSTALL JUNCTION OR PULLBOXES WHERE REQUIRED TO LIMIT BENDS IN CONDUIT RUNS TO NOT MORE THAN 360 DEGREES OR WHERE PULLING TENSION ACHIEVED WOULD EXCEED THE MAXIMUM ALLOWABLE FOR THE CABLE TO BE INSTALLED. CONSULT WIRE AND CABLE MANUFACTURER.
25. SECURELY FASTEN DEVICES INTO BOXES AND ATTACH APPROPRIATE COVER PLATES. CAULK AROUND EDGES OR OUTDOOR DEVICE PLATES AND BOXES WHEN ROUGH WALL SURFACES PREVENT RAINTIGHT SEAL. USE CAULKING MATERIALS APPROVED BY ENGINEER. FIREPROOF AROUND OPENING OF DEVICES LOCATED OR PENETRATING FIRERATED CONSTRUCTION ASSEMBLIES. FIREPROOF AROUND OPENING OF DEVICES LOCATED OR PENETRATING FIRERATED CONSTRUCTION ASSEMBLIES.
26. FURNISH AND INSTALL ENGRAVED LEGEND OF EACH SWITCH THAT CONTROLS EXHAUST FANS, MOTORS, EQUIPMENT SYSTEMS, ETC. NOT LOCATED WITHIN SIGHT OF THE CONTROLLING SWITCH.
27. MOUNT RECEPTACLES VERTICALLY WITH U-SHAPED GROUND POSITION, GROUND PIN SHALL BE FACING DOWN. DO NOT COMBINE GFCI PROTECTED CIRCUITS WITH OTHER CIRCUITS IN THE SAME RACEWAY. LIMIT NUMBER OF GFI PROTECT CIRCUITS IN ANY ONE RACEWAY TO A MAXIMUM OF ONE (1) CIRCUIT.
28. FUSES SHALL BE INSTALLED AND SIZED AS NOTED ON PLANS AND AS REQUIRED PER MANUFACTURER. BE SURE TO OBSERVE MAXIMUM BRANCH CIRCUIT FUSE SIZE LABELS.
29. GROUND NON-CURRENT CARRYING METAL PARTS OF ELECTRICAL EQUIPMENT ENCLOSURES, FRAMES, CONDUCTOR RACEWAYS OR CABLE TRAYS TO PROVIDE A LOW IMPEDANCE PATH FOR LINE-TO-GROUND FAULT CURRENT AND TO BOND ALL NON-CURRENT CARRYING METAL PARTS TOGETHER. INSTALL A GROUND CONDUCTOR IN EACH RACEWAY SYSTEM IN ADDITION TO CONDUCTORS SHOWN. EQUIPMENT GROUND CONDUCTOR SHALL BE ELECTRICALLY AND MECHANICALLY CONTINUOUS FROM THE ELECTRICAL CIRCUIT SOURCE TO THE EQUIPMENT TO BE GROUNDED. SIZE GROUND CONDUCTORS PER NEC 250 UNLESS LARGER CONDUCTORS ARE SHOWN ON THE DRAWINGS. MOTORS SHALL BE CONNECTED TO EQUIPMENT GROUND CONDUCTORS WITH A CONDUIT GROUNDING BUSHING AND WITH A BOLTED SOLDERLESS LUG CONNECTION ON THE METAL FRAME.
30. GROUNDING CONDUCTORS SHALL BE IDENTIFIED WITH GREEN INSULATION, EXCEPT WHERE A BARE GROUND CONDUCTOR IS SPECIFIED. MEASURE GROUND RESISTANCE OF GROUNDING TERMINAL AT EQUIPMENT, SHALL BE 5 OHMS OR LESS.
31. INSTALL RACEWAY COUPLINGS, FITTINGS AND TERMINATIONS SECURE AND TIGHT TO INSURE GOOD GROUND CONTINUITY. PROVIDE INSULATED GROUNDING BUSHING AND BONDING JUMPER WHERE METAL RACEWAY IS NOT DIRECTLY ATTACHED TO EQUIPMENT METAL ENCLOSURE AND AT CONCENTRIC KNOCK-OUTS.
32. CONDUIT TERMINATING IN CONCENTRIC KNOCKOUTS AT PANELBOARDS, CABINETS AND GUTTERS SHALL HAVE INSULATED GROUNDING BUSHINGS AND BONDING JUMPERS INSTALLED INTERCONNECTING ALL SUCH CONDUITS AND THE PANELBOARD CABINET, GUTTER, ETC.
33. PANELBOARDS SHALL HAVE COPPER BUSSING, COPPER GROUND BAR AND DOOR-IN-DOOR TRIM.

TESTING:

1. AT COMPLETION OF JOB, CHECK VOLTAGE AT SEVERAL POINTS OF UTILIZATION ON THE SYSTEM WHICH HAS BEEN INSTALLED UNDER THIS CONTRACT. DURING TEST, ENERGIZE ALL LOADS INSTALLED. MEASURE 3-PHASE VOLTAGES AND NOTE PERCENTAGE DIFFERENCES.
2. CONTRACTOR SHALL PERFORM TESTS AS SPECIFIED TO PROVE INSTALLATION IS IN ACCORDANCE WITH CONTRACT REQUIREMENTS. TESTS SHALL BE CONDUCTED DURING THE CONSTRUCTION PERIOD AND AT COMPLETION TO DETERMINE CONFORMITY WITH APPLICABLE CODES AND WITH THESE SPECIFICATIONS. TESTS, IN ADDITION TO SPECIFIC SYSTEM TEST DESCRIBED ELSEWHERE, SHALL INCLUDE:

- PERFORM TESTING AS DESCRIBED IN NETA ATS. INCLUDE TESTING OF MOTORS FOR CORRECT OPERATION AND ROTATION. ANY PRODUCTS WHICH FAIL DURING THE TESTS OR ARE RULED UNSATISFACTORY BY THE ENGINEER SHALL BE REPLACED, REPAIRED, OR CORRECTED AS PRESCRIBED BY THE ENGINEER AT THE EXPENSE OF THE CONTRACTOR. TESTS SHALL BE PERFORMED AFTER REPAIRS, REPLACEMENTS, OR CORRECTIONS UNTIL SATISFACTORY PERFORMANCE IS DEMONSTRATED.
- ELECTRICAL TESTING COMPANY SHALL BE CERTIFIED BY NETA AND ELECTRICAL CONTRACTOR SHALL BE LISTED WITH THE SUBMISSION OF BID DOCUMENTS.

NOT FOR BID

SALASO'BRIEN
|expect a difference|
3700 South Susan Street, Ste 150
Santa Ana, California 92704
949.517.4900 | 408.297.2995 (f)
salasobrien.com
California | Georgia | Louisiana
Montana | Texas | Washington
Licensed in 50 States

REGISTERED PROFESSIONAL ENGINEER
CHI KIT CHAN
No. E18090
ELECTRICAL
STATE OF CALIFORNIA

SAN BERNARDINO COUNTY

800MHZ UPGRADES - CAJON PASS TOWER

WBSE #10.10.1011
CIP #20-225

ISSUE		
MARK	DATE	DESCRIPTION
	12/23/21	95% CD
	12/16/22	100% CD

SOBE PROJECT NO:	2002862
DATE:	12/16/22
DRAWN BY:	TP
CHECKED BY:	AC
APPROVED BY:	AC

SHEET TITLE
ELECTRICAL SPECIFICATIONS

SCALE: AS NOTED
THIS DRAWING IS 30" X 42" AT FULL SIZE

E-0.2

THIS DRAWING IS 30" X 42" AT FULL SIZE, 15" X 21" AT HALF SIZE. © 2015 BY SALAS O'BRIEN ENGINEERS, INC.

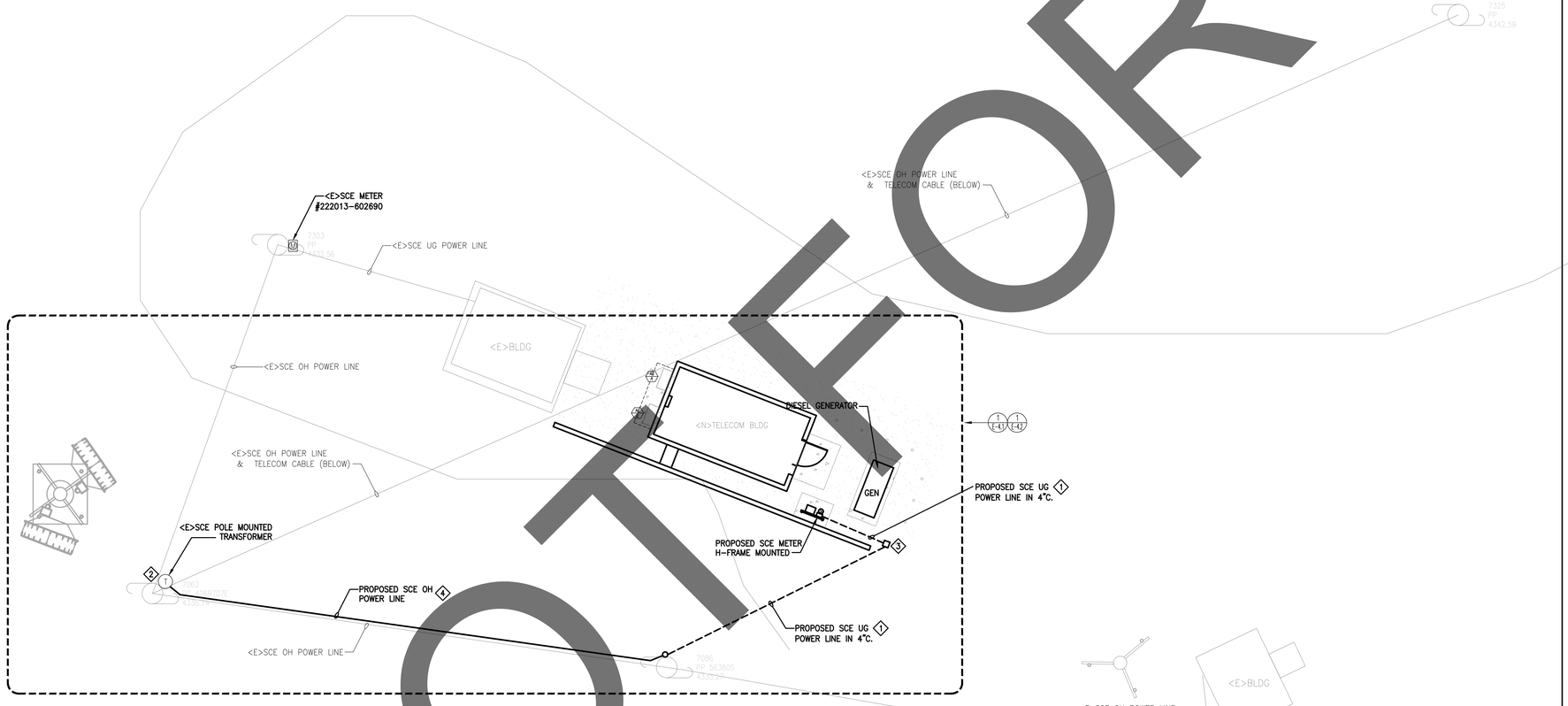

1 ELECTRICAL SITE PLAN
SCALE: 1/8" = 1' - 0"

GENERAL SHEET NOTES

1. COORDINATE WITH SCE FOR EXACT REQUIREMENT OF INCOMING POWER REQUIREMENT.
2. FIBER CONDUIT IS FOR FUTURE USE. TERMINATE FIBER CONNECTION TO POTENTIAL POINT OF CONNECTION. VERIFY WITH COUNTY FOR EXACT TERMINATION POINT.
3. UNDERGROUND UTILITIES SCANNING IS REQUIRED AT ALL UNDERGROUND INSTALLATION.

1 REFERENCE SHEET NOTES

1. COORDINATE WITH SCE FOR EXACT UNDERGROUND ROUTING, CONDUITS SIZE, CONDUCTORS REQUIREMENT. FURNISH AND INSTALL PULLBOXES/MANHOLES AS REQUIRED BY SCE.
2. SCE POINT OF CONNECTION. VERIFY WITH SCE FOR EXACT LOCATION AND REQUIREMENT.
3. 48"x36"x36"D ELECTRICAL CONCRETE PULL BOX WITH H20 TRAFFIC LOCKABLE COVER PER SCE REQUIREMENT.
4. COORDINATE WITH SCE FOR OVERHEAD POWER CONNECTION REQUIREMENT.
5. SCE FIBER POINT OF CONNECTION. VERIFY WITH SCE FOR EXACT LOCATION AND REQUIREMENT.

NOT FOR BID

SALASO'BRIEN
expect a difference
3700 South Susan Street, Ste 150
Santa Ana, California 92704
949.517.4900 | 408.297.2995 (f)
salasobrien.com
California | Georgia | Louisiana
Montana | Texas | Washington
Licensed in 50 States

REGISTERED PROFESSIONAL ENGINEER
ERIC KIT CHAN
No. E18090
ELECTRICAL
STATE OF CALIFORNIA

SAN BERNARDINO COUNTY

800MHZ UPGRADES - CAJON PASS TOWER

WBSE #10.10.1011
CIP #20-225

ISSUE		
MARK	DATE	DESCRIPTION
	12/23/21	95% CD
	12/16/22	100% CD

SOBE PROJECT NO:	2002862
DATE:	12/16/22
DRAWN BY:	TP
CHECKED BY:	AC
APPROVED BY:	AC

SHEET TITLE
ELECTRICAL
BOILER ROOM
FLOOR PLANS

SCALE: AS NOTED
THIS DRAWING IS 30" X 42" AT FULL SIZE

E-1.1

THIS DRAWING IS 30" X 42" AT FULL SIZE, 15" X 21" AT HALF SIZE. © 2015 BY SALAS O'BRIEN ENGINEERS, INC.

REFERENCE SHEET NOTES

21. 4" UNDERGROUND CONDUIT FROM SCE FIBER POINT OF CONNECTION 48"WX36"L UNDERGROUND PULLBOX. COORDINATE WITH SCE FOR EXACT ROUTING AND REQUIREMENT.

22. MAIN GROUND BUS BAR. SEE GROUNDING PLAN FOR DETAIL.

23. 4" CONDUIT (SCH 80) FIBER CONNECTION STUB UP ABOVEGROUND WITH THREADED METAL CAP FOR FUTURE USE.

24. 4FT LED LINEAR LIGHT FIXTURE (EATON #4SNLED-LD5-34SL-LW-UNV-L840-CD-1-U). COORDINATE WITH WATTSTOPPER FOR CONTROL COMPATIBILITY.

25. EMERGENCY EXIT SIGN (SURE-LITES #CX-6-1)

26. UNDERGROUND (4)4" CONDUITS FROM TOWER BASE TO ITD EQUIPMENT BUILDING. COORDINATE WITH COUNTY ITD DEPARTMENT FOR CONDUITS STUB UP EXACT LOCATION AND BENDING RADIUS REQUIREMENT PER GENERAL NOTES.

27. UNDERGROUND CONDUITS STUB OUT FROM RETAINING WALL AT +2FT AFF. SEE ARCHITECTURAL PLAN AND CIVIL PLAN FOR COORDINATION.

28. TOWER CABLES AND GROUND WIRES SHALL BE INSTALLED TO THE UNDERSIDE OF METAL LADDER COVER. SEE STRUCTURAL FOR LADDER COVER MOUNTING BETWEEN RETAINING WALL AND BUILDING. GROUND WIRES SHALL BE TERMINATED AT EXTERIOR GROUND BUSBAR (EGB). SEE GROUNDING PLAN FOR DETAIL.

29. (1) 2" UNDERGROUND CONDUIT FROM BUILDING 6" ABOVEGROUND STUB UP TO EXTERIOR (NEMA-3R) 12"L X 12"W X 6"D JUNCTION BOX AT H-FRAME. VERIFY WITH COUNTY FOR EXACT LOCATION. PROVIDE CONDUIT CAP AT BUILDING STUB UP.

30. PROVIDE 1FT CONDUIT STUB UP AT THE BOTTOM OF TOWER FOR (4)4" UNDERGROUND CONDUITS. PROVIDE ACCESSIBLE HANDHOLE AT THE BOTTOM OF TOWER FOR CABLE PULLING. VERIFY WITH COUNTY FOR STUB UP EXACT LOCATION. SEE STRUCTURAL PLAN FOR DETAIL.

31. CONDUIT BENDING RADIUS SHALL BE LIMITED TO MINIMUM 16", AND MET COUNTY WAVE-GUIDE INSTALLATION STANDARD.

REFERENCE SHEET NOTES

1. SCE INCOMING SERVICE PANEL WITH SCE METER AND MAIN CIRCUIT BREAKER ON POLE H-FRAME. COORDINATE WITH SCE FOR EXACT REQUIREMENT.

2. 4" UNDERGROUND CONDUIT FROM <E>SCE POWER POINT OF CONNECTION/UTILITY TRANSFORMER TO SCE METER VIA 48"Wx36"L UNDERGROUND PULLBOX. COORDINATE WITH SCE FOR EXACT ROUTING AND REQUIREMENT.

3. 200AMP 240/120V 1ø MANUAL TRANSFER SWITCH (SOURCE 1 – OFF – SOURCE 2) WITH CAMLOCK (MALE: LOAD, FEMALE: NEUTRAL+GROUND) ON POLE H-FRAME MOUNTED.

4. POLE H-FRAME STRUCTURE. SEE DETAIL.

5. ELECTRICAL PANEL (42 CIRCUITS) WITH MAIN CIRCUIT BREAKER AND TVSS. SEE SINGLE LINE DIAGRAM AND PANEL SCHEDULE FOR DETAIL.

6. ABOVE DOOR SCONE LIGHT (IP66 RATED) (MANUFACTURER: TECH-D #T632LED-10-UNI12-35-T2-BZ-G2-PC1-MS-SP10). PROVIDE FULL CUTOFF SHIELD FOR ANY POTENTIAL LIGHT TRESPASSING. CONTROL BY INTEGRATED PHOTOCELL (OFF DURING DAYTIME) AND MOTION SENSON (WITH LIGHT ON DELAY 4 MINS MAX). COORDINATE WITH FORESTRY DEPARTMENT FOR EXACT REQUIREMENT.

7. DIGITAL TIMER SWITCH. (WATTSTOPPER #TS-400-W WITH VISUAL AND AUDIBLE WARNING OPTIONS.) COORDINATE WITH EATON LIGHTING FOR LED CONTROL COMPATIBILITY.

8. 120V NEMA L2-20 RECEPTACLE ABOVE EQUIPMENT RACK WITH 3/4"C-2#12,1#12GND. COORDINATE WITH COUNTY OF SAN BERNARDINO FOR EXACT LOCATION.

9. 208V 1ø NEMA L6-30 RECEPTACLE ABOVE EQUIPMENT RACK WITH 3/4"C-2#10,1#10GND. COORDINATE WITH COUNTY OF SAN BERNARDINO FOR EXACT LOCATION.

10. ANTENNA TOWER CABLING AND GROUNDING CONDUITS PENETRATION. NO 90 DEGREE BEND IS ALLOWED FOR TELECOM/ANTENNA TOWER CABLES. SEE ARCHITECTURAL AND STRUCTURAL PLAN FOR PENETRATION LOCATION.

11. 1" CONDUIT FOR COMMUNICATION WIRE FROM GENERATOR TO ATS FOR GENERATOR START.

12. POWER CONNECTION FOR LEAD-LAG HVAC CONTROL PANEL WITH TEMPERATURE ALARM. PROVIDE COMMUNICATION WIRING WITH 3/4" CONDUIT TO BMS PER COUNTY OF SAN BERNARDINO REQUIREMENT.

13. 60AMP 240V 2P WP NEMA-3R HEAVY DUTY DISCONNECT SWITCH WITH 3/4"C-2#6, 1#10GND FOR AC-1 AND AC-2 RESPECTIVELY. DISCONNECT SWITCH SHALL BE INSTALLED OUTSIDE OF HVAC UNIT CAGE. FURNISH AND INSTALL 3/4" CONDUIT WITH CONTROL WIRING BACK TO LEAD-LAG HVAC CONTROL PANEL.

14. 3/4"C-3#12,1#12GND FOR 120V POWER CONNECTION OF BLOCK HEATER AND BATTERY CHARGER OF GENERATOR. COORDINATE WITH GENERATOR MANUFACTURER FOR POINT OF CONNECTION AND EXACT REQUIREMENT.

15. 30kW DIESEL GENERATOR (NOT EXCEEDING 49BHP) WITH:
    - 330GAL (5-DAYS RUNTIME) DOUBLE WALL BELLY TANK AND LEAK DETECTION WITHIN TANK
    - SPILL CONTAINER & OVERFILL FUEL SENSOR
    - LEVEL 2 ENCLOSURE
    - FULL TANK OF FUEL
    - INTEGRATED CIRCUIT BREAKER
    - EPA TIER 4i REQUIRMENT
    - COMPLETE SYSTEM LOAD TEST AND START-UP
    - TEN YEAR WARRANTY
    - STEADY STATE VOLTAGE REGULATION IS TO BE +/- 0.25%

16. CONCRETE HOUSEKEEPING PAD PER STRUCTURAL.

17. CONCRETE FILLED 4" BOLLARDS. PROVIDE (4) REMOVABLE BOLLARDS AT THE FRONT ENTRANCE FOR FUTURE ACCESS.

18. 48"Wx36"L CONCRETE ELECTRICAL PULL BOX WITH H20 TRAFFIC RATED LOCKABLE COVER. COORDINATE WITH SCE FOR EXACT REQUIREMENT.

19. 36"x36" CONCRETE ELECTRICAL PULL BOX WITH H20 TRAFFIC RATED LOCKABLE COVER FOR FIBER CONNECTION. COORDINATE SCE FOR EXACT REQUIREMENT.

20. TOWER GROUND BUS BAR. SEE GROUNDING PLAN FOR DETAIL.

GENERATOR SPEC

A. CONTRACTOR SHALL VERIFY WITH COUNTY OF SAN BERNARDINO FOR GENERATOR AND ATS EXACT REQUIREMENT.

B. ALL SYSTEM SHALL BE REVIEWED AND APPROVED BY COUNTY AND ENGINEER.

C. CONTRACTOR SHALL PROVIDE UTILITY UNDERVOLTAGE SENSOR AND AUXILIARY CONTROL TO GENERATOR FOR POWER OUTAGE STARTUP.

D. 30kW DIESEL GENERATOR (NOT EXCEEDING 49BHP) WITH (BUT NOT LIMITED TO):
- -- 330GAL (5-DAYS RUNTIME) DOUBLE WALL BELLY TANK AND LEAK DETECTION WITHIN TANK
- -- SPILL CONTAINER & OVERFILL FUEL SENSOR
- -- LEVEL 2 ENCLOSURE
- -- FULL TANK OF FUEL
- -- INTEGRATED CIRCUIT BREAKER
- -- EPA TIER 4i REQUIRMENT
- -- COMPLETE SYSTEM LOAD TEST AND START-UP
- -- TEN YEAR WARRANTY
- -- STEADY STATE VOLTAGE REGULATION IS TO BE +/- 0.25%
- -- 12-LEAD RECONNECTABLE GENERATOR WITH SINGLE BEARING, SELF-VENTILATED, DRIP-PROOF
- -- MOTOR STARTING CAPABILITY OF 63 skVA AT 35% INSTANTANEOUS VOLTAGE DIP
- -- CONTROL PANEL SHALL PROVIDE REAL TIME DIGITAL COMMUNICATIONS
- -- CONTROL PANEL SHALL PROVIDE:
  - ------- LCD DISPLAY WITH TEXT BASED ALARM/EVENT
  - ------- AUDIBLE HORN FOR ALARM WITH SHUTDOWN SWITCH
  - ------- STANDARD ISO LABELING
  - ------- REMOTE START/STOP CONTROL
  - ------- LOCAL RUN/OFF/AUTO CONTROL INTEGRAL TO SYS
  - ------- COOL DOWN TIMER
  - ------- EMERGENCY STOP PUSH BUTTON
- -- CONTROL PANEL MONITORING:
  - ------- ENGINE OIL PRESSURE
  - ------- ENGINE COOLANT TEMP
  - ------- ENGINE RPM
  - ------- BATTERY VOLTS
  - ------- ENGINE HOURS
  - ------- ENGINE CRANK ATTEMPT COUNTER
  - ------- SERVICE MAINTENANCE INTERVAL
  - ------- REAL TIME CLOCK
  - ------- BASE TANK FUEL LEVEL
  - ------- GENERATOR AC VOLTS
  - ------- GENERATOR AC CURRENT PER PHASE
  - ------- GENERATOR AC FREQUENCY
  - ------- GENERATOR KW
- -- ALARMS AND SHUT DOWNS:
  - ------- LOW OIL PRESSURE ALARM/SHUTDOWN
  - ------- HIGH COOLANT TEMP ALARM/SHUTDOWN
  - ------- LOSS OF COOLANT SHUTDOWN
  - ------- OVER SPEED SHUTDOWN
  - ------- OVER CRANK SHUTDOWN
  - ------- EMERGENCY STOP SHUTDOWN
  - ------- LOW COOLANT TEMP ALARM
  - ------- LOW BATTERY VOLTAGE ALARM
  - ------- HIGH BATTERY VOLTAGE ALARM
  - ------- CONTROL SWITCH NOT IN AUTO POSITION ALARM
  - ------- BATTERY CHARGER FAILURE ALARM
  - ------- LOW FUEL LEVEL (SHUTDOWN)
  - ------- GENERATOR OVER VOLTAGE
  - ------- GENERATOR UNDER VOLTAGE
  - ------- GENERATOR OVER FREQUENCY
  - ------- GENERATOR UNDER FREQUENCY
  - ------- GENERATOR OVER CURRENT

GENERAL SHEET NOTES

A. CONTRACTOR SHALL PERFORM GROUNDING RESISTANCE TEST PRIOR TO THE CONSTRUCTION AS THE GROUNDING RESISTANCE BASE LINE. CONTRACTOR SHALL PERFORM SECOND GROUNDING RESISTANCE TEST AFTER GROUNDING SYSTEM ING INSTALLED TO CONFIRM THE RESISTANCE IS LESS THAN 5 OHMS. IF IT IS MORE THAN 5 OHMS, CONTRACTOR SHALL PERFORM ADDITIONAL GROUNDING MITIGATION PER BELOW.

B. IF GROUNDING SYSTEM CANNOT REACH 5 OHMS WITH ADDITIONAL GROUNDING PLATES, FURNISH AND INSTALL LYNCONITE II AS BACKFILL TO SURROUND THE XIT SYSTEMS DURING INSTALLATION. IT IS BASED ON NATURAL CLAY FORMED BY VOLCANIC ACTION. SPECIALLY PROCESSED TO BE VERY ELECTRICALLY CONDUCTIVE. LYNCONITE II ENHANCES THE PERFORMANCE OF THE GROUNDING SYSTEM. IT IS MIXED WITH WATER (14 GALS/BAG) UNTIL A SLURRY IS FORMED (SIMILAR TO PANCAKE BATTER) AND PUMPED OR POURED AROUND THE ELECTRODE IN THE HOLE.

C. GROUNDING TASK LIST:
- •••a. EXCAVATE 12"x36" DITCH AS SPECIFIC AROUND THE EQUIPMENT AND BUILDING FOR THE GROUNDING LOOP AND XIT GROUNDING RODS. NOTICE TO EXCAVATION CONTRACTOR: SOIL IN REGION IS HARD AND ROCKY. EXCAVATION OF TRENCH MAY REQUIRE SPECIALIZED EQUIPMENT.
- •••b. INSTALL HORIZONTAL XIT GROUNDING RODS PER MANUFACTURER SPECIFICATIONS OF SPECIFIED LENGTH AND DIAMETER WITH CONCRETE TRAFFIC RATED BOX AND LID AT THE CONNECTION END.
- •••c. INSTALL 4/0 STRANDED COPPER GROUNDING CABLE IN EXCAVATED TRENCH.
- •••d. BACKFILL GROUNDING RODS AND GROUND WIRES EXCAVATION AREA WITH (APPROX. 6" OF) BETONITE MIXTURE PER MANUFACTURE'S SPECIFICATION.
- •••e. BACKFILL EXCAVATED PATH WITH NO.2 CABON FILL.
- •••f. LAND MECHANICAL GROUNDING CABLE TO EQUIPMENT WITH EXOTHERMIC WELDS.
- •••g. ALL COPPER CABLE CONNECTIONS ARE TO BE EXOTHERMIC UNLESS NOTED.
- •••h. EXOTHERMICALLY WELD GROUNDING SYSTEM LEGS TO EXISTING FENCE POSTS ICE BRIDGE. ABOVE GROUND CONNECTIONS TO FENCING SHALL USE NO.2 STRANDED COPPER WIRE WITHIN NON-METALLIC SEAL TIGHT. FENCES AND MOVING OBJECT THAT ARE TO BE GROUNDED SHALL BE INSTALLED SIMILARLY WITH THE ADDITION OF A 12" STRAIN RELIEF LOOP AT EACH PIVOT POINT.
- •••i. IDENTIFY LOCATION OF EXISTING SHELTER AND TOWER HALOS MAKE CONNECTIONS.
- •••j. TRENCH SHALL BE BACKFILLED WITH SPOILS.
- •••k. SPOILS FROM EXCAVATION SHALL BE DISPERSED ON OR NEAR THE SITE AT THE DIRECTION OF THE PROJECT MANAGER. SPOILS IN NO WAY SHALL INTERFERE WITH WATER RUNOFF OR ROADS.
- •••l. TEST NEW GROUNDING SYSTEM PER COUNTY OF SAN BERNARDINO.

D. LIGHT WEIGHT SLURRY (2 SACKS) SHALL BE INSTALLED ON TOP OF GROUND WIRING AT ALL LOCATIONS.

E. ALL TELECOM/LOW VOLTAGE CONDUITS SHALL BE STUB UP FROM UNDERGROUND TO 6" ABOVE FINISH FLOOR. NO 90 DEGREE BEND IS ALLOWED FOR TELECOM/ANTENNA TOWER CABLES. MINIMUM CONDUITS BENDING RADIUS OF TELECOM/ANTENNA TOWER CABLES SHALL BE 16".

F. PROVIDE PULL STRINGS AT ALL EMPTY CONDUITS. TAG BOTH ENDS OF CONDUITS FOR TERMINATION IDENTIFICATION.

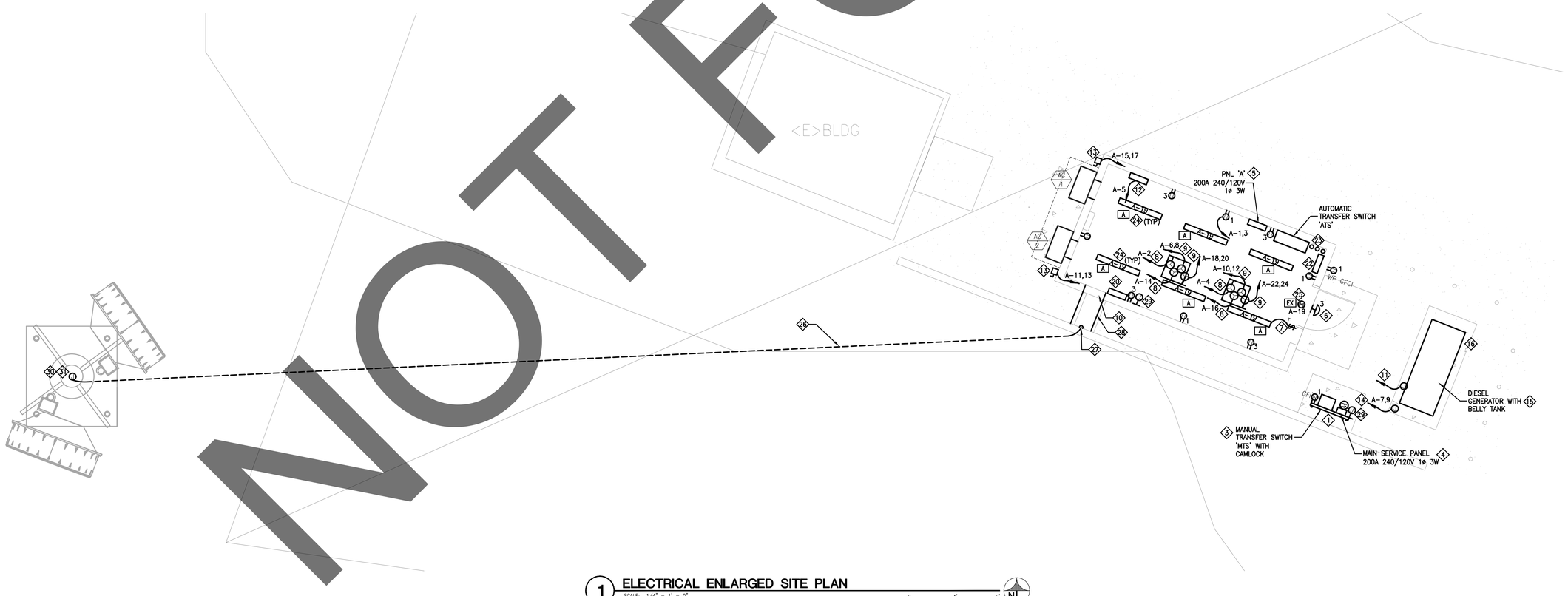

1 ELECTRICAL ENLARGED SITE PLAN
SCALE: 1/4" = 1' - 0"

NOT FOR BID

SALAS O'BRIEN
expect a difference
3700 South Susan Street, Ste 150
Santa Ana, California 92704
949.517.4900 | 408.297.2995 (f)
salasobrien.com
California | Georgia | Louisiana
Montana | Texas | Washington
Licensed in 50 States

REGISTERED PROFESSIONAL ENGINEER
ERIC KIT CHAN
No. E18090
ELECTRICAL
STATE OF CALIFORNIA

SAN BERNARDINO COUNTY

800MHZ UPGRADES - CAJON PASS TOWER

WBSE #10.10.1011
CIP #20-225

ISSUE		
MARK	DATE	DESCRIPTION
	12/23/21	95% CD
	12/16/22	100% CD

SOBE PROJECT NO:	2002862
DATE:	12/16/22
DRAWN BY:	TP
CHECKED BY:	AC
APPROVED BY:	AC

SHEET TITLE
ELECTRICAL
ENLARGED SITE PLAN

SCALE: AS NOTED
THIS DRAWING IS 30" X 42" AT FULL SIZE

E-4.1

THIS DRAWING IS 30" X 42" AT FULL SIZE, 15" X 21" AT HALF SIZE. © 2015 BY SALAS O'BRIEN ENGINEERS, INC.

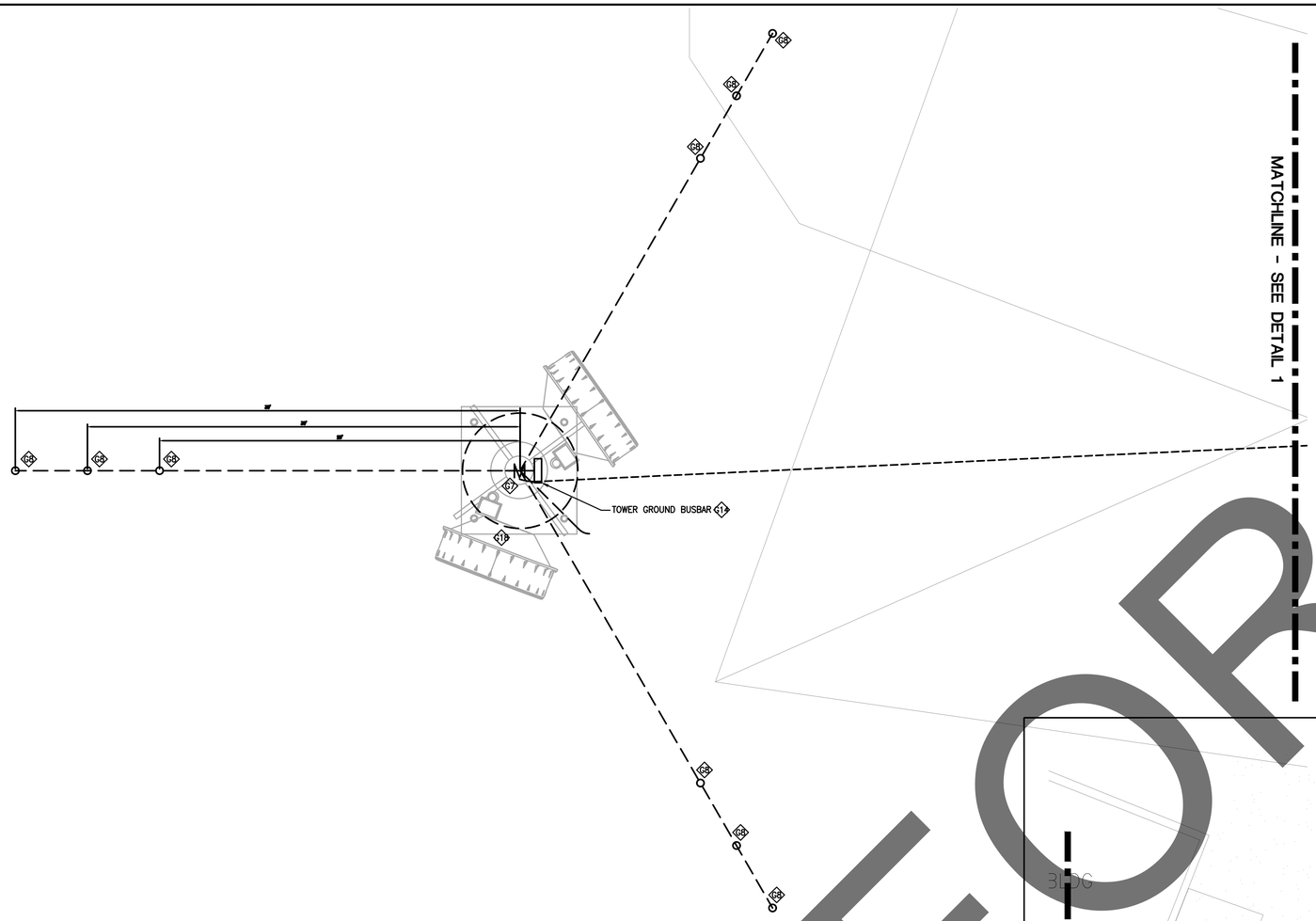

2 ELECTRICAL GROUNDING HALO SCHEME
SCALE: 1/4" = 1' - 0"

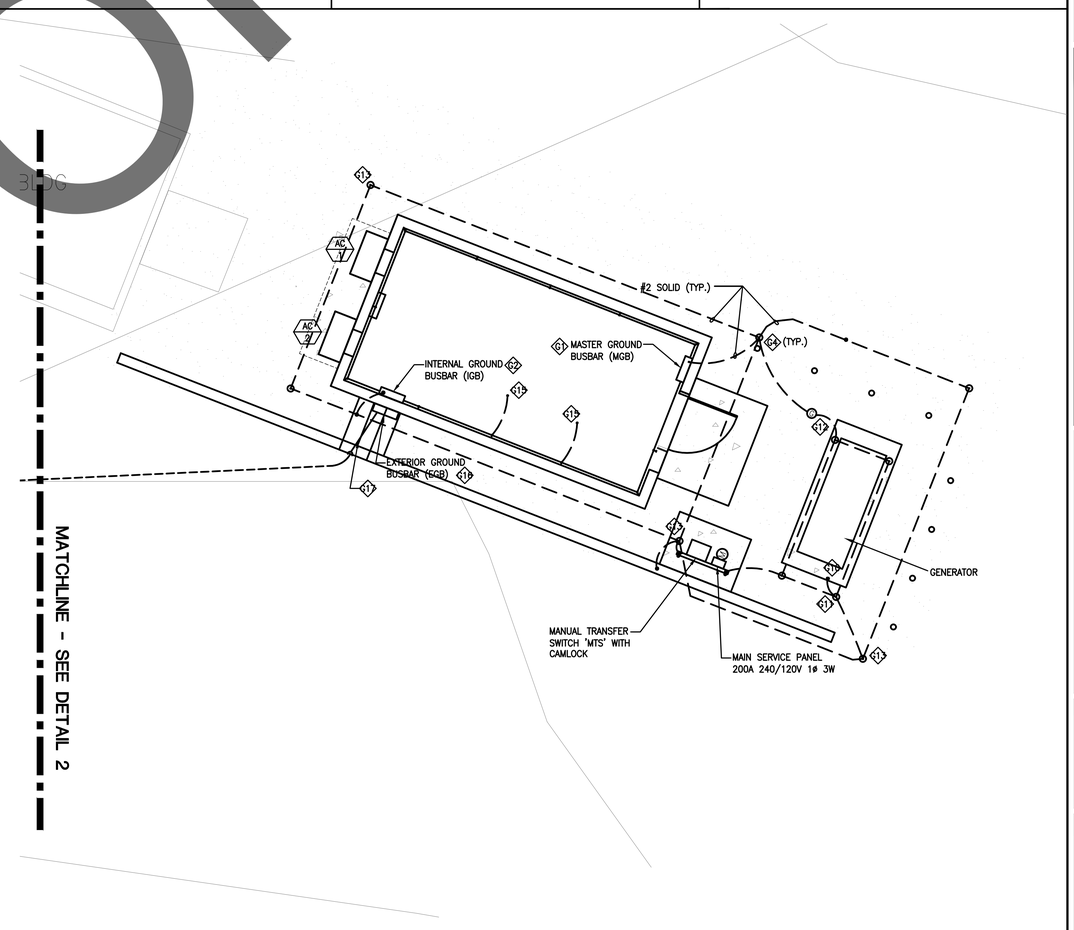

1 ELECTRICAL GROUNDING HALO SCHEME
SCALE: 1/4" = 1' - 0"

REFERENCE SHEET NOTES

G1. MASTER GROUND BUS BAR. SEE DETAIL.

G2. INTERNAL GROUND BUS BAR. CONNECT TO ANTENNA VIA TOWER GROUND BUS BAR PER COUNTY OF SAN BERNARDINO REQUIREMENT.

G3. INTERNAL GROUNDING RING 4" BELOW CEILING. CONNECT ALL METAL DOORS/WINDOWS/VENTS/DATA RACKS/LIGHT FIXTURES WITH #6 CABLE PER COUNTY OF SAN BERNARDINO REQUIREMENT.

G4. CAD-WELD 12"X12" COPPER GROUNDING PLATES. FURNISH AND INSTALL ADDITIONAL GROUND PLATE AS REQUIRED TO REACH NO MORE THAN 5 OHMS RESISTANCE.

G5. CAD-WELD GROUNDING TO ICE BRIDGE.

G6. UNDERGROUND GROUND RING FOR ANTENNA TOWER PER COUNTY OF SAN BERNARDINO REQUIREMENT.

G7. BONE AND CAD-WELD GROUNDING TO TOWER DOWN CONDUCTORS PER COUNTY OF SAN BERNARDINO REQUIREMENT. EXTEND AND CAD-WELD GROUNDING CONNECTION TO ANTENNA DEVICES/EQUIPMENT AS REQUIRED PER COUNTY OF SAN BERNARDINO.

G8. #2 SOLID TINNED COPPER GROUND RADIALS WITH EARTHING ELECTRODES (GROUND RODS OR PLATES TO ACHIEVE REQUIRED RESISTANCE).

G9. BOND METALLIC DOORS TO UNDERGROUND GROUND RING WITH #2 CABLE.

G10. BOND GENERATOR METALLIC ENCLOSURE TO UNDERGROUND GROUND RING WITH #2 CABLE.

G11. BOND GENERATOR PAD UNDERGROUND RING TO SITE GROUND RING WITH #2 CABLE.

G12. FURNISH AND INSTALL CONCRETE GROUND WELL WITH ELECTRODE FOR TESTING.

G13. FURNISH AND INSTALL GROUNDING ELECTRODE.

G14. TOWER GROUND BUS BAR. CONNECT TO ANTENNA TOWER GROUNDING AND UNDERGROUND GROUNDING GRID PER DETAILS AND COUNTY OF SAN BERNARDINO REQUIREMENT.

G15. CONNECT GROUNDING TO DATA RACKS. COORDINATE WITH IT DEPARTMENT OF COUNTY OF SAN BERNARDINO.

G16. FURNISH AND INSTALL EXTERIOR GROUND BUSBAR (EGB) UNDER THE METAL LADDER COVER. TERMINATE TOWER GROUNDING CABLES AND EXTEND CONNECTION TO INTERNAL GROUNDING BUSBAR (IGB) PER COUNTY REQUIREMENT.

G17. CONTINUOUS GROUNDING CABLES SHALL BE INSTALLED AT UNDERSIDE OF METAL LADDER COVER.

G18. TOWER GROUNDING RING TO BE INSTALLED WITHIN FOUNDATION AS UFER GROUND.

GENERAL SHEET NOTES

A. CONTRACTOR SHALL PERFORM GROUNDING RESISTANCE TEST PRIOR TO THE CONSTRUCTION AS THE GROUNDING RESISTANCE BASE LINE. CONTRACTOR SHALL PERFORM SECOND GROUNDING RESISTANCE TEST AFTER GROUNDING SYSTEM IS INSTALLED TO CONFIRM THE RESISTANCE IS LESS THAN 5 OHMS. IF IT IS MORE THAN 5 OHMS, CONTRACTOR SHALL PERFORM ADDITIONAL GROUNDING MITIGATION PER BELOW.

B. IF GROUNDING SYSTEM CANNOT REACH 5 OHMS WITH ADDITIONAL GROUNDING PLATES, FURNISH AND INSTALL LYNCONITE II AS BACKFILL TO SURROUND THE XIT SYSTEMS DURING INSTALLATION. IT IS BASED ON NATURAL CLAY FORMED BY VOLCANIC ACTION. SPECIALLY PROCESSED TO BE VERY ELECTRICALLY CONDUCTIVE. LYNCONITE II ENHANCES THE PERFORMANCE OF THE GROUNDING SYSTEM. IT IS MIXED WITH WATER (14 GALS/BAG) UNTIL A SLURRY IS FORMED (SIMILAR TO PANCAKE BATTER) AND PUMPED OR POURED AROUND THE ELECTRODE IN THE HOLE.

C. GROUNDING TASK LIST:
- •••a. EXCAVATE 12"x36" DITCH AS SPECIFIC AROUND THE EQUIPMENT AND BUILDING FOR THE GROUNDING LOOP AND XIT GROUNDING RODS. NOTICE TO EXCAVATION CONTRACTOR: SOIL IN REGION IS HARD AND ROCKY. EXCAVATION OF TRENCH MAY REQUIRE SPECIALIZED EQUIPMENT.
- •••b. INSTALL HORIZONTAL XIT GROUNDING RODS PER MANUFACTURER SPECIFICATIONS OF SPECIFIED LENGTH AND DIAMETER WITH CONCRETE TRAFFIC RATED BOX AND LID AT THE CONNECTION END.
- •••c. INSTALL 4/0 STRANDED COPPER GROUNDING CABLE IN EXCAVATED TRENCH.
- •••d. BACKFILL GROUNDING RODS AND GROUND WIRES EXCAVATION AREA WITH (APPROX. 6" OF) BETONITE MIXTURE PER MANUFACTURE'S SPECIFICATION.
- •••e. BACKFILL EXCAVATED PATH WITH NO.2 CABON FILL.
- •••f. LAND MECHANICAL GROUNDING CABLE TO EQUIPMENT WITH EXOTHERMIC WELDS.
- •••g. ALL COPPER CABLE CONNECTIONS ARE TO BE EXOTHERMIC UNLESS NOTED.
- •••h. EXOTHERMICALLY WELD GROUNDING SYSTEM LEGS TO EXISTING FENCE POSTS ICE BRIDGE. ABOVE GROUND CONNECTIONS TO FENCING SHALL USE NO.2 STRANDED COPPER WIRE WITHIN NON-METALLIC SEAL TIGHT. FENCES AND MOVING OBJECT THAT ARE TO BE GROUNDED SHALL BE INSTALLED SIMILARLY WITH THE ADDITION OF A 12" STRAIN RELIEF LOOP AT EACH PIVOT POINT.
- •••i. IDENTIFY LOCATION OF EXISTING SHELTER AND TOWER HALOS MAKE CONNECTIONS.
- •••j. TRENCH SHALL BE BACKFILLED WITH SPOILS.
- •••k. SPOILS FROM EXCAVATION SHALL BE DISPERSED ON OR NEAR THE SITE AT THE DIRECTION OF THE PROJECT MANAGER. SPOILS IN NO WAY SHALL INTERFERE WITH WATER RUNOFF OR ROADS.
- •••l. TEST NEW GROUNDING SYSTEM PER COUNTY OF SAN BERNARDINO.
- •••m. GROUNDING TEST REPORT SHALL BE SUBMITTED FOR COUNTY AND EEOR REVIEW AND APPROVAL PRIOR TO CLOSE-OUT.

D. LIGHT WEIGHT SLURRY (2 SACKS) SHALL BE INSTALLED ON TOP OF GROUND WIRING AT ALL LOCATIONS.

E. CONDUITS SHALL BE STUB UP IN 45 DEGREE FROM UNDERGROUND TO 6" ABOVE FINISH FLOOR. NO 90 DEGREE BEND IS ALLOWED FOR TELECOM/ANTENNA TOWER CABLES.

F. ALL TELECOM/LOW VOLTAGE CONDUITS SHALL BE STUB UP FROM UNDERGROUND TO 6" ABOVE FINISH FLOOR. NO 90 DEGREE BEND IS ALLOWED FOR TELECOM/ANTENNA TOWER CABLES. MINIMUM CONDUITS BENDING RADIUS OF TELECOM/ANTENNA TOWER CABLES SHALL BE 16".

G. PROVIDE PULL STRINGS AT ALL EMPTY CONDUITS. TAG BOTH ENDS OF CONDUITS FOR TERMINATION IDENTIFICATION.

NOT FOR BID

SALAS O'BRIEN
expect a difference
3700 South Susan Street, Ste 150
Santa Ana, California 92704
949.517.4900 | 408.297.2995 (f)
salasobrien.com
California | Georgia | Louisiana
Montana | Texas | Washington
Licensed in 50 States

REGISTERED PROFESSIONAL ENGINEER
ERIC KIT CHAN
No. E18090
ELECTRICAL
STATE OF CALIFORNIA

SAN BERNARDINO COUNTY

800MHZ UPGRADES - CAJON PASS TOWER

WBSE #10.10.1011
CIP #20-225

ISSUE

MARK	DATE	DESCRIPTION
	12/23/21	95% CD
	12/16/22	100% CD

SOBE PROJECT NO:	2002862
DATE:	12/16/22
DRAWN BY:	TP
CHECKED BY:	AC
APPROVED BY:	AC

SHEET TITLE
ELECTRICAL
ENLARGED SITE PLAN
- GROUNDING

SCALE: AS NOTED
THIS DRAWING IS 30" X 42" AT FULL SIZE

E-4.2

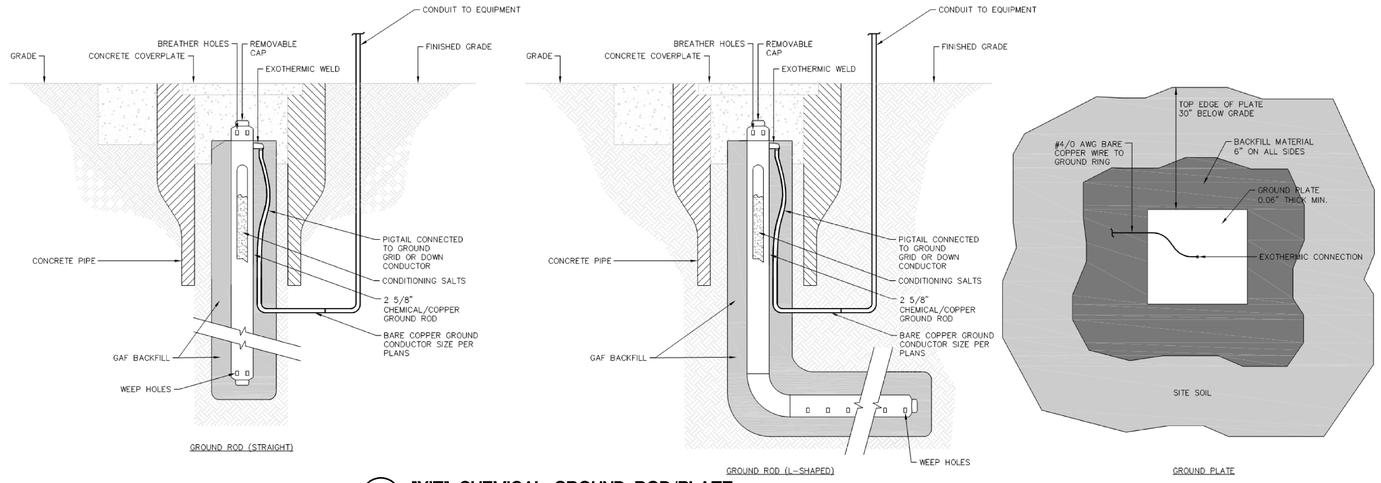

9 "XIT" CHEMICAL GROUND ROD/PLATE

SCALE: N.T.S.

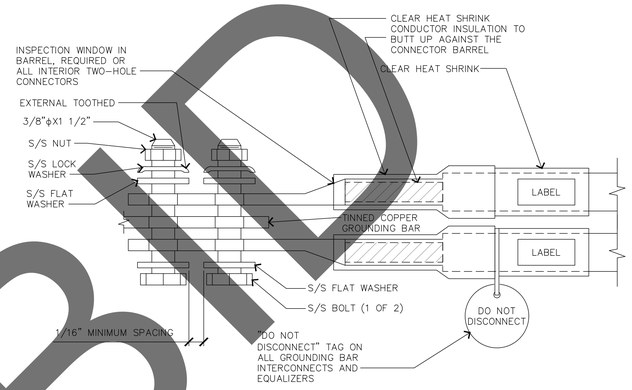

3 INTERIOR TWO HOLES LUG

SCALE: N.T.S.

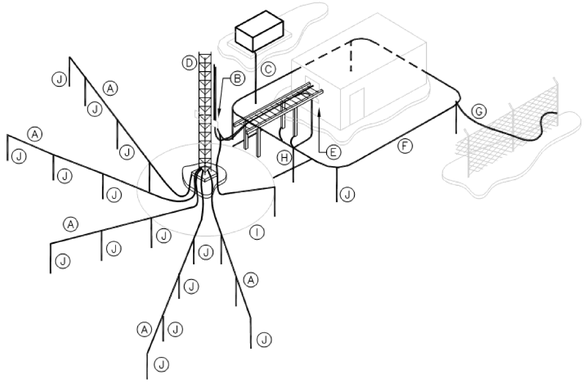

A. GROUNDING RADIALS
B. MONOPOLE GROUND BUS BAR AND DOWN CONDUCTOR
C. GENERATOR GROUNDING CONDUCTOR
D. MONOPOLE
E. EXTERNAL GROUND BUS BAR
F. SHELTER GROUND RING INSTALLED AT LEAST 36" FROM BUILDING FOUNDATION.
G. FENCE GROUNDING CONDUCTOR
H. GROUND RING BONDING CONDUCTORS
I. TOWER GROUND RING (INSTALLED AT LEAST 24" FROM MONOPOLE FOUNDATION.
J. EATHING ELECTRODES (GROUND RODS OR PLATES TO ACHIEVE REQUIRED RESISTANCE)

8 EXTERNAL GROUNDING ELECTRODE SYSTEM

SCALE: N.T.S.

EACH GROUND CONDUCTOR TERMINATING ON ANY GROUND BAR SHALL HAVE AN IDENTIFICATION TAG ATTACHED AT EACH END THAT WILL IDENTIFY ITS ORIGIN AND DESTINATION.

SECTION "P" – SURGE PROTECTORS

CABLE ENTRY PORTS (HATCH PLATES) (2 AWG)
GENERATOR FRAMEWORK (IF AVAILABLE) (2 AWG)
TELCO GROUND BAR (2 AWG)
COMMERCIAL POWER COMMON NEUTRAL/GROUND BOND (2 AWG)
+24V POWER SUPPLY RETURN BAR (2 AWG)
–48V POWER SUPPLY RETURN BAR (2 AWG)
RECTIFIER FRAMES
COAX SUPPRESSION

SECTION "A" – SURGE ABSORBERS

INTERIOR GROUND RING (2 AWG)
EXTERNAL EARTH GROUND FIELD (BURIED GROUND RING) (2 AWG)
METALLIC COLD WATER PIPE (IF AVAILABLE) (2 AWG)
BUILDING STEEL (IF AVAILABLE) (2 AWG)

SECTION "I" – ISOLATED GROUND ZONE

ALL COMMUNICATIONS EQUIPMENT FRAMES
ISOLATED GROUND BAR – IGB (2 AWG)

DETAIL NOTES:

1. EXOTHERMICALLY WELD 2 AWG BARE TINNED SOLID COPPER CONDUCTOR TO GROUND BAR. ROUTE CONDUCTOR TO BURIED GROUND RING AND PROVIDE PARALLEL EXOTHERMIC WELD.
2. USE PERMANENT MARKER TO DRAW THE LINES BETWEEN EACH SECTION AND LABEL EACH SECTION ("P", "A", "I") WITH 1" HIGH LETTERS.

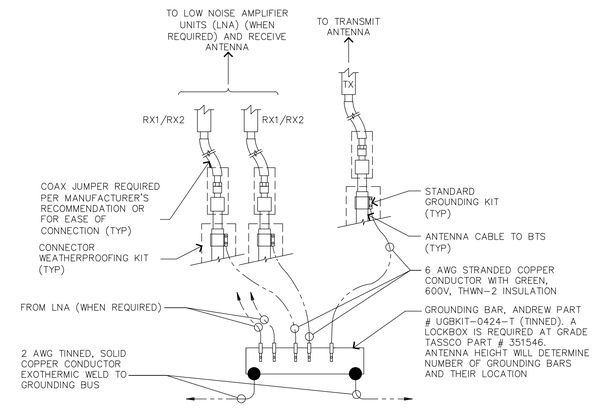

2 ANTENNA GROUNDING BAR

SCALE: N.T.S.

NEWTON INSTRUMENT COMPANY, INC. BUTNER, N.C. OR APPROVED EQUAL			
NO.	REQ.	PART NO.	DESCRIPTION
1	1	1/4"X4"X30"	SOLID GND. BAR
2	2	A-6056	WALL MTG. BRKT.
3	2	3061-4	INSULATORS
4	4	3012-1	5/8"-11X1" H.H.C.S.
5	4	3015-8	5/8 LOCKWASHER

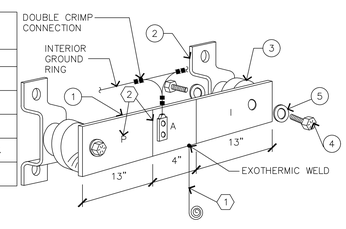

5 GROUND BAR

SCALE: N.T.S.

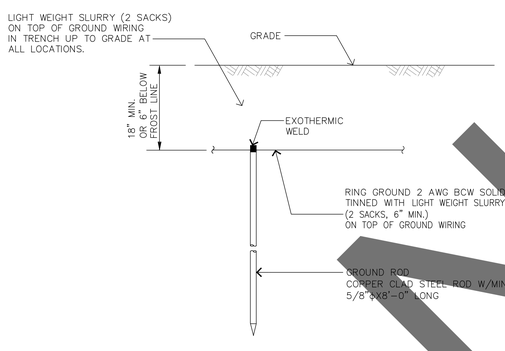

1. GROUND ROD SHALL BE DRIVEN VERTICALLY, NOT TO EXCEED 45 DEGREES FROM THE VERTICAL.

7 GROUND ROD

SCALE: N.T.S.

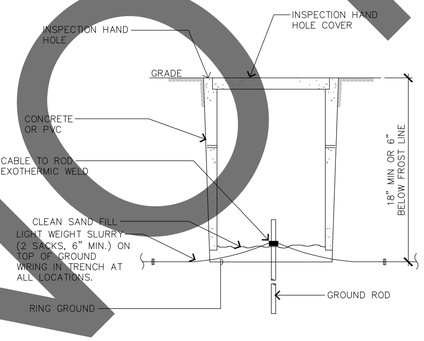

NOTE: INSPECTION HAND HOLE MAY BE CONCRETE OR PVC AND SHALL BE A MINIMUM OF 6" IN WIDTH/DIAMETER

6 GROUND ROD WITH ACCESS

SCALE: N.T.S.

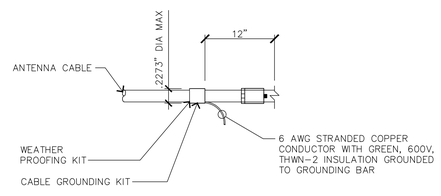

4 CONNECTION OF CABLE GROUND KIT

SCALE: N.T.S.

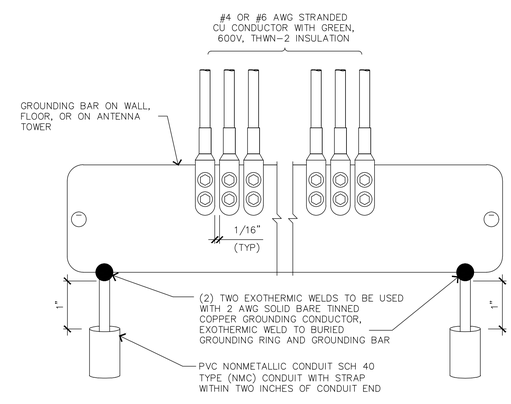

1 INSTL. OF GRND. CONDUCTOR TO GRND. BAR

SCALE: N.T.S.

NOT FOR BID

SALAS O'BRIEN
expect a difference
3700 South Susan Street, Ste 150
Santa Ana, California 92704
949.517.4900 | 408.297.2995 (f)
salasobrien.com
California | Georgia | Louisiana
Montana | Texas | Washington
Licensed in 50 States

REGISTERED PROFESSIONAL ENGINEER
ERIC KIT CHAN
No. E18090
ELECTRICAL
STATE OF CALIFORNIA

SAN BERNARDINO COUNTY

800MHZ UPGRADES - CAJON PASS TOWER

WBSE #10.10.1011
CIP #20-225

ISSUE		
MARK	DATE	DESCRIPTION
	12/23/21	95% CD
	12/16/22	100% CD

SOBE PROJECT NO:	2002862
DATE:	12/16/22
DRAWN BY:	TP
CHECKED BY:	AC
APPROVED BY:	AC

SHEET TITLE
ELECTRICAL DETAILS

SCALE: AS NOTED
THIS DRAWING IS 30" X 42" AT FULL SIZE

E-5.1

THIS DRAWING IS 30" X 42" AT FULL SIZE. 15" X 21" AT HALF SIZE. © 2015 BY SALAS O'BRIEN ENGINEERS, INC.

THIS DRAWING IS 30" X 42" AT FULL SIZE, 15" X 21" AT HALF SIZE. © 2015 BY SALAS O'BRIEN ENGINEERS, INC.

NOT FOR BID

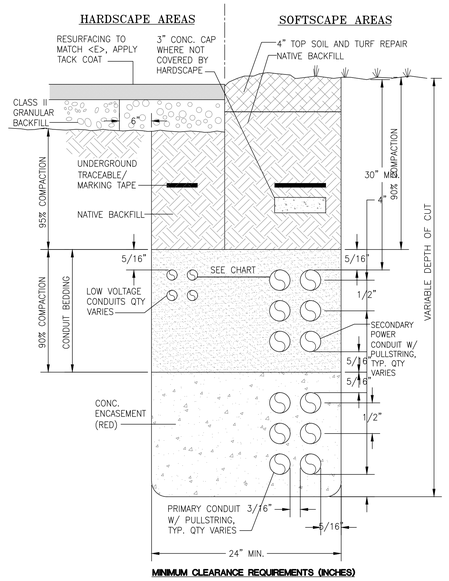

MINIMUM CLEARANCE REQUIREMENTS (INCHES)

	PC	SC	G	TEL	TV	LV	W
PRIMARY CONDUIT (OVER 600V) (PC)	–	8	36	36	36	36	36
SECONDARY POWER CONDUIT (SC)	8	–	12	12	12	12	36
GAS (G)	36	12	–	12	12	12	36
TELEPHONE (TEL)	36	12	12	–	2	2	36
CATV (TV)	36	12	12	2	–	2	36
OTHER LOW VOLTAGE (LV)	36	12	12	2	2	–	36
WET UTILITIES (W)	36	36	36	36	36	36	–

NOTES:

1. UTILITY OWNED AND END-USER CONDUITS AND TRENCH SHALL NOT BE COMBINED.
2. PROVIDE 12" SEPARATION WHEN CROSSING "WET" UTILITIES.

1 TRENCH SECTION

SCALE: N.T.S.

SALASO'BRIEN
expect a difference
3700 South Susan Street, Ste 150
Santa Ana, California 92704
949.517.4900 | 408.297.2995 (f)
salasobrien.com
California | Georgia | Louisiana
Montana | Texas | Washington
Licensed in 50 States

REGISTERED PROFESSIONAL ENGINEER
ERIC KIT CHAN
No. E18090
ELECTRICAL
STATE OF CALIFORNIA

SAN BERNARDINO COUNTY

800MHZ UPGRADES - CAJON PASS TOWER

WBSE #10.10.1011
CIP #20-225

ISSUE

MARK	DATE	DESCRIPTION
	12/23/21	95% CD
	12/16/22	100% CD

SOBE PROJECT NO:	2002862
DATE:	12/16/22
DRAWN BY:	TP
CHECKED BY:	AC
APPROVED BY:	AC

SHEET TITLE

ELECTRICAL DETAILS

SCALE: AS NOTED

THIS DRAWING IS 30" X 42" AT FULL SIZE

E-5.2

THIS DRAWING IS 30" X 42" AT FULL SIZE, 15" X 21" AT HALF SIZE. © 2015 BY SALAS O'BRIEN ENGINEERS, INC.

PANEL SCHEDULE

<N>PANEL 'A' VOLTAGE 120/ 240 V
LOCATION – TYPE NQOD
AIC RATING 22 KAIC PHASE 1 WIRE 3

	DESCRIPTION	BRKR P	BRKR T	LCL	KVA LOAD A	KVA LOAD B	KVA LOAD A	KVA LOAD B	LCL	BRKR P	BRKR T	DESCRIPTION	
1	WP RECEPTACLES	1	20	0.0	0.9		0.5		0.0	1	20	TWIST LOCK RECEPTACLE	2
3	RECEPTACLES	1	20	0.0		0.7		0.5	0.0	1	20	TWIST LOCK RECEPTACLE	4
5	HVAC LEAD-LAG CONTROL PANEL	1	20	0.0	0.3		1.5		0.0	2	30	30AMP RECEPTACLE	6
7	GENERATOR BLOCK HEATER	1	20	0.0		0.5		1.5	0.0	-	-	-----	8
9	GENERATOR BATTERY CHARGER	1	20	0.0	0.5		1.5		0.0	2	30	30AMP RECEPTACLE	10
11	AC UNIT AC-2	2	60	X 1.0		4.0		0.5	0.0	-	-	-----	12
13	-----	-	-	X 1.0	4.0		0.5		0.0	1	20	TWIST LOCK RECEPTACLE	14
15	AC UNIT AC-1	2	60	X 1.0		4.0		0.5	0.0	1	20	TWIST LOCK RECEPTACLE	16
17	-----	-	-	X 1.0	4.0		1.5		0.0	2	30	30AMP RECEPTACLE	18
19	LIGHTS	1	20	0.0		0.4		1.5	0.0	-	-	-----	20
21	SPARE	1	20	0.0			1.5		0.0	2	30	30AMP RECEPTACLE	22
23	SPARE	1	20	0.0				1.5	0.0	-	-	-----	24
25	SPARE	1	20	0.0					0.0	1	20	SPARE	26
27	SPARE	1	20	0.0					0.0	1	20	SPARE	28
29	SPARE	1	20	0.0					0.0	1	20	SPARE	30
31	SPARE			0.0					0.0	1	20	SPARE	32
33	SPACE			0.0					0.0	1	20	SPARE	34
35	SPACE			0.0					0.0	1	20	SPARE	36
37	SPACE			0.0					0.0			SPACE	38
39	SPACE			0.0					0.0			SPACE	40
41	SPACE			0.0					0.0			SPACE	42
	SUBTOTAL				4.0	10	10	7	7 0.0			SUBTOTAL	

MCB OR MLO	MCB	TOTAL LOAD PHASE A	17 KVA
MAIN CIRCUIT BREAKER RATING	200 AMPS	TOTAL LOAD PHASE B	17 KVA
BUS RATING	225 AMPS		
MOUNTING	SURFACE	TOTAL LG (NEC/CEC 215.2.A.1)	4 KVA
		TOTAL PANEL LOAD (KVA)	37 KVA
		TOTAL PANEL LOAD (AMPS)	154 AMPS

OPTIONS
1 DOOR-IN-DOOR ENCLOSURE
2 COPPER BUSSING
3 PROVIDE INTEGRATED 200AMP RATED TRANSIENT VOLTAGE SURGE PROTECTION DEVICE (TYPE 2)

V.17

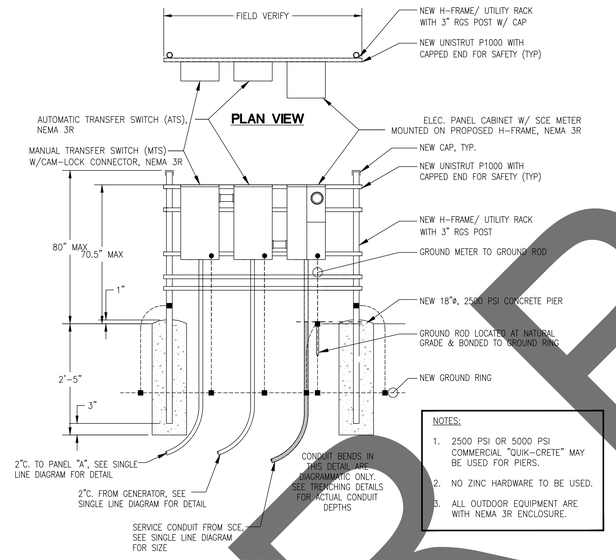

NOTES:
1. 2500 PSI OR 5000 PSI COMMERCIAL "QUIK-CRETE" MAY BE USED FOR PIERS.
2. NO ZINC HARDWARE TO BE USED.
3. ALL OUTDOOR EQUIPMENT ARE WITH NEMA 3R ENCLOSURE.

2 H-FRAME DETAIL
SCALE: N.T.S.

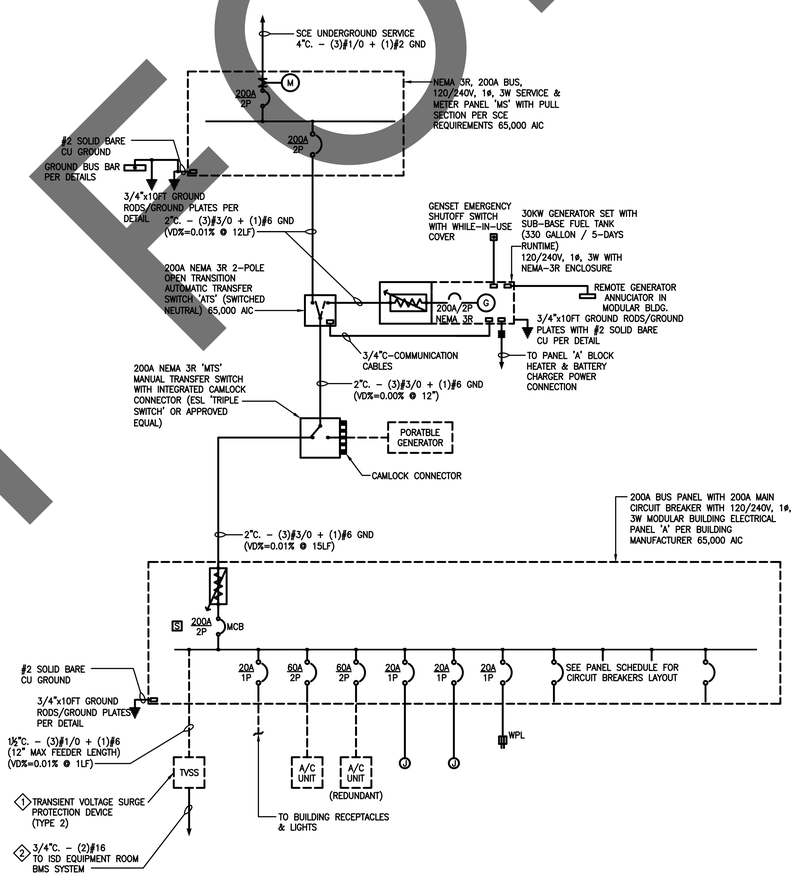

1 ELECTRICAL SINGLE LINE DIAGRAM
SCHEMATIC

GENERAL SHEET NOTES

A. ALL EQUIPMENT SHALL HAVE COPPER BUSSING AND WIRING. ALL TRANSFORMERS SHALL HAVE COPPER WINDING.

REFERENCE SHEET NOTES

1. FURNISH AND INSTALL AC TRANSIENT VOLTAGE SURGE SUPPRESSOR (ACDATA SOLUTION #BB2XRR). INSTALL SUPPRESSOR BELOW PANEL. VERIFY WITH MANUFACTURER FOR EXACT REQUIREMENT.
2. FURNISH AND INSTALL ALARM CONNECTION TO BMS. COORDINATE WITH SBC ISD FOR BMS TERMINATION. VERIFY WITH MANUFACTURER FOR EXACT REQUIREMENT.

SALASO'BRIEN
expect a difference
3700 South Susan Street, Ste 150
Santa Ana, California 92704
949.517.4900 | 408.297.2995 (f)
salasobrien.com
California | Georgia | Louisiana
Montana | Texas | Washington
Licensed in 50 States

REGISTERED PROFESSIONAL ENGINEER
ERIC KITT CHAN
No. E18090
ELECTRICAL
STATE OF CALIFORNIA

SAN BERNARDINO COUNTY

800MHZ UPGRADES - CAJON PASS TOWER

WBSE #10.10.1011
CIP #20-225

ISSUE

MARK	DATE	DESCRIPTION
	12/23/21	95% CD
	12/16/22	100% CD

SOBE PROJECT NO:	2002862
DATE:	12/16/22
DRAWN BY:	TP
CHECKED BY:	AC
APPROVED BY:	AC

SHEET TITLE
ELECTRICAL SINGLE LINE DIAGRAM

SCALE: AS NOTED
THIS DRAWING IS 30" X 42" AT FULL SIZE

E-7.1

NOT FOR BID

GENERAL NOTES

1. ALL GRADING AND CONSTRUCTION SHALL CONFORM TO THE SAN BERNARDINO COUNTY DEVELOPMENT CODE AND THE STATE MODEL WATER EFFICIENCY LANDSCAPE ORDINANCE UNLESS SPECIFICALLY NOTED ON THESE PLANS.
2. ANY MODIFICATIONS OF OR CHANGES TO APPROVED GRADING PLANS MUST BE APPROVED BY THE BUILDING OFFICIAL.
3. NO GRADING SHALL BE STARTED WITHOUT FIRST NOTIFYING THE BUILDING OFFICIAL. A PRE-GRADING MEETING AT THE SITE IS REQUIRED BEFORE THE START OF THE GRADING WITH THE FOLLOWING PEOPLE PRESENT: OWNER, GRADING CONTRACTOR, DESIGN CIVIL ENGINEER, SOILS ENGINEER, GEOLOGIST, COUNTY GRADING INSPECTOR(S) OR THEIR REPRESENTATIVES, AND WHEN REQUIRED THE ARCHEOLOGIST OR OTHER JURISDICTIONAL AGENCIES. PERMITTEE OR HIS AGENT ARE RESPONSIBLE FOR ARRANGING PRE-GRADE MEETING AND MUST NOTIFY THE BUILDING OFFICIAL AT LEAST TWO BUSINESS DAYS PRIOR TO PROPOSED PRE-GRADE MEETING.
4. APPROVAL OF THESE PLANS REFLECT SOLELY THE REVIEW OF PLANS IN ACCORDANCE WITH THE COUNTY OF LOS ANGELES BUILDING CODES AND DOES NOT REFLECT ANY POSITION BY THE COUNTY OF SAN BERNARDINO OR THE DEPARTMENT OF PUBLIC WORKS REGARDING THE STATUS OF ANY TITLE ISSUES RELATING TO THE LAND ON WHICH THE IMPROVEMENTS MAY BE CONSTRUCTED. ANY DISPUTES RELATING TO TITLE ARE SOLELY A PRIVATE MATTER NOT INVOLVING THE COUNTY OF LOS ANGELES OR THE DEPARTMENT OF PUBLIC WORKS.
5. ALL GRADING AND CONSTRUCTION ACTIVITIES SHALL COMPLY WITH SAN BERNARDINO COUNTY DEVELOPMENT CODE SECTION 83.01.080 THAT CONTROLS AND RESTRICTS NOISE FROM THE USE OF CONSTRUCTION AND GRADING EQUIPMENT FROM THE HOURS OF 8:00 PM TO 6:30 AM, AND ON SUNDAYS AND HOLIDAYS. (MORE RESTRICTIVE CONSTRUCTION ACTIVITY TIMES MAY GOVERN, AS REQUIRED BY THE DEPARTMENT OF REGIONAL PLANNING AND SHOULD BE SHOWN ON THE GRADING PLANS WHEN APPLICABLE.)
6. CALIFORNIA PUBLIC RESOURCES CODE (SECTION 5097.98) AND HEALTH AND SAFETY CODE (SECTION 7050.5) ADDRESS THE DISCOVERY AND DISPOSITION OF HUMAN REMAINS. IN THE EVENT OF DISCOVERY OR RECOGNITION OF ANY HUMAN REMAINS IN ANY LOCATION OTHER THAN A DEDICATED CEMETERY, THE LAW REQUIRES THAT GRADING IMMEDIATELY STOPS AND NO FURTHER EXCAVATION OR DISTURBANCE OF THE SITE, OR ANY NEARBY AREA WHERE HUMAN REMAINS MAY BE LOCATED, OCCUR UNTIL THE FOLLOWING HAS BEEN MEASURES HAVE BEEN TAKEN:
   - A. THE COUNTY CORONER HAS BEEN INFORMED AND HAS DETERMINED THAT NO INVESTIGATION OF THE CAUSE OF DEATH IS REQUIRED, AND
   - B. IF THE REMAINS ARE OF NATIVE AMERICAN ORIGIN, THE DESCENDANTS FROM THE DECEASED NATIVE AMERICANS HAVE MADE A RECOMMENDATION FOR THE MEANS OF TREATING OR DISPOSING, WITH APPROPRIATE DIGNITY, OF THE HUMAN REMAINS AND ANY ASSOCIATED GRAVE GOODS.
7. THE LOCATION AND PROTECTION OF ALL UTILITIES IS THE RESPONSIBILITY OF THE PERMITTEE.
8. ALL EXPORT OF MATERIAL FROM THE SITE MUST GO TO A PERMITTED SITE APPROVED BY THE BUILDING OFFICIAL OR A LEGAL DUMPSITE. RECEIPTS FOR ACCEPTANCE OF EXCESS MATERIAL BY A DUMPSITE ARE REQUIRED AND MUST BE PROVIDED TO THE BUILDING OFFICIAL UPON REQUEST.
9. A COPY OF THE GRADING PERMIT AND APPROVED GRADING PLANS MUST BE IN THE POSSESSION OF A RESPONSIBLE PERSON AND AVAILABLE AT THE SITE AT ALL TIMES.
10. SITE BOUNDARIES, EASEMENTS, DRAINAGE DEVICES, RESTRICTED USE AREAS SHALL BE LOCATED PER CONSTRUCTION STAKING BY FIELD ENGINEER OR LICENSED SURVEYOR. PRIOR TO GRADING, AS REQUESTED BY THE BUILDING OFFICIAL, ALL PROPERTY LINES, EASEMENTS, AND RESTRICTED USE AREAS SHALL BE STAKED.
11. THE STANDARD RETAINING WALL DETAILS (IF ANY) SHOWN ON THE GRADING PLANS ARE FOR REFERENCE ONLY. STANDARD RETAINING WALLS ARE NOT CHECKED, PERMITTED, OR INSPECTED PER THE GRADING PERMIT. A SEPARATE RETAINING WALL PERMIT IS REQUIRED FOR ALL STANDARD RETAINING WALLS.

    NOTE: THIS NOTE ONLY APPLIES TO STANDARD RETAINING WALLS. GEOGRID FABRIC AND SEGMENTAL RETAINING WALLS (IF ANY) DO NOT REQUIRE A SEPARATE RETAINING WALL PERMIT. DETAILS AND CONSTRUCTION NOTES FOR ALL GEOGRID WALLS MUST BE ON THE GRADING PLAN.
12. A PREVENTIVE PROGRAM TO PROTECT THE SLOPES FROM POTENTIAL DAMAGE FROM BURROWING RODENTS IS REQUIRED PER SECTION 84.09.030 SAN BERNARDINO COUNTY DEVELOPMENT CODE. OWNER IS TO INSPECT SLOPES PERIODICALLY FOR EVIDENCE OF BURROWING RODENTS AND A FIRST EVIDENCE OF THEIR EXISTENCE SHALL EMPLOY AN EXTERMINATOR FOR THEIR REMOVAL.
13. WHERE A GRADING PERMIT IS ISSUED AND THE BUILDING OFFICIAL DETERMINES THAT THE GRADING WILL NOT BE COMPLETED PRIOR TO NOVEMBER 1, THE OWNER OF THE SITE ON WHICH THE GRADING IS BEING PERFORMED SHALL, ON OR BEFORE OCTOBER 1, FILE OR CAUSE TO BE FILED WITH THE BUILDING OFFICIAL AN ESCP PER SAN BERNARDINO COUNTY DEVELOPMENT CODE.
14. TRANSFER OF RESPONSIBILITY: IF THE FIELD ENGINEER, THE SOILS ENGINEER, OR THE ENGINEERING GEOLOGIST OF RECORD IS CHANGED DURING GRADING, THE WORK SHALL BE STOPPED UNTIL THE REPLACEMENT HAS AGREED IN WRITING TO ACCEPT THEIR RESPONSIBILITY WITHIN THE AREA OF TECHNICAL COMPETENCE FOR APPROVAL UPON COMPLETION OF THE WORK. IT SHALL BE THE DUTY OF THE PERMITTEE TO NOTIFY THE BUILDING OFFICIAL IN WRITING OF SUCH CHANGE PRIOR TO THE RECOMMENCEMENT OF SUCH GRADING.

INSPECTION NOTES

15. THE PERMITTEE OR HIS AGENT SHALL NOTIFY THE BUILDING OFFICIAL AT LEAST ONE WORKING DAY IN ADVANCE OF REQUIRED INSPECTIONS AT FOLLOWING STAGES OF THE WORK. (SECTION 86.09.150 OF THE SAN BERNARDINO COUNTY DEVELOPMENT CODE.)
    - A. PRE-GRADE – BEFORE THE START OF ANY EARTH DISTURBING ACTIVITY OR CONSTRUCTION
    - B. INITIAL – WHEN THE SITE HAS BEEN CLEARED OF VEGETATION AND UNAPPROVED FILL HAS BEEN SCARIFIED, BENCHED, OR OTHERWISE PREPARED FOR FILL. FILL SHALL NOT BE PLACED PRIOR TO THIS INSPECTION. NOTE: PRIOR TO ANY CONSTRUCTION ACTIVITIES, INCLUDING GRADING, ALL STORM WATER POLLUTION PREVENTION MEASURES INCLUDING EROSION CONTROL DEVICES WHICH CONTAIN SEDIMENTS MUST BE INSTALLED.
    - C. ROUGH – WHEN APPROXIMATE FINAL ELEVATIONS HAVE BEEN ESTABLISHED; DRAINAGE TERRACES, SWALES AND BERMS INSTALLED AT THE TOP OF THE SLOPE; AND THE STATEMENTS REQUIRED IN THIS SECTION HAVE BEEN RECEIVED
    - D. FINAL – WHEN GRADING HAS BEEN COMPLETED; ALL DRAINAGE DEVICES INSTALLED; SLOPE PLANTING ESTABLISHED, IRRIGATION SYSTEMS INSTALLED AS THE AS-BUILT PLANS, REQUIRED STATEMENTS, AND REPORTS HAVE BEEN SUBMITTED AND APPROVED.
16. IN ADDITION TO THE INSPECTION REQUIRED BY THE BUILDING OFFICIAL FOR GRADING, REPORTS AND STATEMENTS SHALL BE SUBMITTED TO THE BUILDING OFFICIAL IN ACCORDANCE WITH SECTION 86.09.150 OF THE SAN BERNARDINO COUNTY DEVELOPMENT CODE.
17. UNLESS OTHERWISE DIRECTED BY THE BUILDING OFFICIAL, THE FIELD ENGINEER AND ALL ENGINEERED GRADING PROJECTS SHALL PREPARE ROUTINE INSPECTION REPORTS AS REQUIRED UNDER SECTION 86.09.150 OF THE SAN BERNARDINO COUNTY DEVELOPMENT CODE. THESE REPORTS, KNOWN AS "REPORT OF GRADING ACTIVITIES", SHALL BE SUBMITTED TO THE BUILDING OFFICIAL AS FOLLOWS:
    1. BI-WEEKLY DURING ALL TIMES WHEN GRADING OF 400 CUBIC YARDS OR MORE PER WEEK IS OCCURRING ON THE SITE;
    2. MONTHLY, AT ALL OTHER TIMES; AND
    3. AT ANY TIME WHEN REQUESTED IN WRITING BY THE BUILDING OFFICIAL.

    SUCH "REPORT OF GRADING ACTIVITIES" SHALL CERTIFY TO THE BUILDING OFFICIAL THAT THE FIELD ENGINEER HAS INSPECTED THE GRADING SITE AND RELATED ACTIVITIES AND HAS FOUND THEM IN COMPLIANCE WITH THE APPROVED GRADING PLANS AND SPECIFICATIONS, THE BUILDING CODE, ALL GRADING PERMIT CONDITIONS, AND ALL OTHER APPLICABLE ORDINANCES AND REQUIREMENTS.
18. ALL GRADED SITES MUST HAVE DRAINAGE SWALES, BERMS, AND OTHER DRAINAGE DEVICES INSTALLED PRIOR TO ROUGH GRADING APPROVAL.
19. THE GRADING CONTRACTOR SHALL SUBMIT THE STATEMENT TO THE GRADING INSPECTOR AS REQUIRED PER SECTION 85.11 OF THE SAN BERNARDINO COUNTY DEVELOPMENT CODE AT THE COMPLETION OF ROUGH GRADING.
20. FINAL GRADING MUST BE APPROVED BEFORE OCCUPANCY OF BUILDINGS WILL ALLOW PER THE COUNTY OF SAN BERNARDINO BUILDING CODE.

DRAINAGE NOTES

21. ROOF DRAINAGE MUST BE DIVERTED FROM GRADED SLOPES.
22. PROVISIONS SHALL BE MADE FOR CONTRIBUTORY DRAINAGE AT ALL TIMES.
23. ALL STORM DRAIN WORK IS TO BE DONE UNDER CONTINUOUS INSPECTION BY THE FIELD ENGINEER PER SECTION 83.04 OF THE SAN BERNARDINO COUNTY DEVELOPMENT CODE.

CALIFORNIA CODE OF REGULATIONS:

APPLICABLE CODES AS OF JANUARY 1, 2021
2019 BUILDING STANDARDS ADMINISTRATIVE CODE, PART 1, CBSC
2019 CALIFORNIA BUILDING CODE (CBC), PART 2, CBSC
(2018 IBC AND CALIFORNIA AMENDMENTS)
2019 CALIFORNIA FIRE CODE, PART 9, CBSC
(2018 INTERNATIONAL FIRE CODE AND CALIFORNIA AMENDMENTS)

LIST OF FEDERAL CODES AND STANDARDS
2021 STANDARD SPECIFICATIONS FOR PUBLIC WORKS CONSTRUCTION (SSPWC)
2018 STANDARD PLANS FOR PUBLIC WORKS CONSTRUCTION (SPPWC)

GENERAL GEOTECHNICAL NOTES

25. ALL WORK MUST BE IN COMPLIANCE WITH THE RECOMMENDATIONS INCLUDED IN THE GEOTECHNICAL CONSULTANT'S REPORT(S) AND THE APPROVED GRADING PLANS AND SPECIFICATIONS.
26. GRADING OPERATIONS MUST BE CONDUCTED UNDER PERIODIC INSPECTIONS BY THE GEOTECHNICAL CONSULTANTS WITH MONTHLY INSPECTION REPORTS TO BE SUBMITTED TO THE GEOLOGY AND SOILS SECTION.
27. THE SOIL ENGINEER SHALL PROVIDE SUFFICIENT INSPECTIONS DURING THE PREPARATION OF THE NATURAL GROUND AND THE PLACEMENT AND COMPACTION OF THE FILL TO BE SATISFIED THAT THE WORK IS BEING PERFORMED IN ACCORDANCE WITH THE PLAN AND APPLICABLE CODE REQUIREMENTS.
28. ROUGH GRADING MUST BE APPROVED BY A FINAL ENGINEERING GEOLOGY AND SOILS ENGINEERING REPORT. AN AS-BUILT GEOLOGICAL MAP MUST BE INCLUDED IN THE FINAL GEOLOGY REPORT. PROVIDE A FINAL REPORT STATEMENT THAT VERIFIES WORK WAS DONE IN ACCORDANCE WITH REPORT RECOMMENDATIONS AND CODE PROVISIONS (SECTION 88.03.120 OF THE SAN BERNARDINO COUNTY DEVELOPMENT CODE). THE FINAL REPORT(S) MUST BE SUBMITTED TO THE GEOTECHNICAL AND MATERIALS ENGINEERING DIVISION FOR REVIEW AND APPROVAL.
29. FOUNDATION, WALL AND POOL EXCAVATIONS MUST BE INSPECTED AND APPROVED BY THE CONSULTING GEOLOGIST AND SOIL ENGINEER, PRIOR TO THE PLACING OF STEEL OR CONCRETE.
30. BUILDING PADS LOCATED IN CUT/FILL TRANSITION AREAS SHALL BE OVER-EXCAVATED A MINIMUM OF THREE (3) FEET BELOW THE PROPOSED BOTTOM OF FOOTING.

FILL NOTES

31. ALL FILL SHALL BE COMPACTED TO THE FOLLOWING MINIMUM RELATIVE COMPACTION CRITERIA:
    - A. 90 PERCENT OF MAXIMUM DRY DENSITY WITHIN 40 FEET BELOW FINISH GRADE.
    - B. 93 PERCENT OF MAXIMUM DRY DENSITY DEEPER THAN 40 FEET BELOW FINISH GRADE, UNLESS A LOWER RELATIVE COMPACTION (NOT LESS THAN 90 PERCENT OF MAXIMUM DRY DENSITY) IS JUSTIFIED BY THE GEOTECHNICAL ENGINEER. THE RELATIVE COMPACTION SHALL BE DETERMINED BY A.S.T.M. SOIL COMPACTION TEST D1557-91 WHERE APPLICABLE: WHERE NOT APPLICABLE, A TEST ACCEPTABLE TO THE BUILDING OFFICIAL SHALL BE USED. (SECTION 88.03.120 OF THE SAN BERNARDINO COUNTY DEVELOPMENT CODE.)
    - C. 95 PERCENT OF MAXIMUM DRY DENSITY IS REQUIRED FOR ALL FIRE LANES UNLESS OTHERWISE APPROVED BY THE FIRE DEPARTMENT.
32. FIELD DENSITY SHALL BE DETERMINED BY A METHOD ACCEPTABLE TO THE BUILDING OFFICIAL. (PER THE COUNTY OF SAN BERNARDINO BUILDING CODE.) HOWEVER, NOT LESS THAN 10% OF THE REQUIRED DENSITY TEST, UNIFORMLY DISTRIBUTED, AND SHALL BE OBTAINED BY THE SAND CONE METHOD.
33. SUFFICIENT TESTS OF THE FILL SOILS SHALL BE MADE TO DETERMINE THE RELATIVE COMPACTION OF THE FILL IN ACCORDANCE WITH THE FOLLOWING MINIMUM GUIDELINES:
    - A. ONE TEST FOR EACH TWO-FOOT VERTICAL LIFT.
    - B. ONE TEST FOR EACH 1,000 CUBIC YARDS OF MATERIAL PLACED.
    - C. ONE TEST AT THE LOCATION OF THE FINAL FILL SLOPE FOR EACH BUILDING SITE (LOT) IN EACH FOUR-FOOT VERTICAL LIFT OR PORTION THEREOF.
    - D. ONE TEST IN THE VICINITY OF EACH BUILDING PAD FOR EACH FOUR-FOOT VERTICAL LIFT OR PORTION THEREOF.
34. SUFFICIENT TESTS OF FILL SOILS SHALL BE MADE TO VERIFY THAT THE SOIL PROPERTIES COMPLY WITH THE DESIGN REQUIREMENTS, AS DETERMINED BY THE SOIL ENGINEER INCLUDING SOIL TYPES, SHEAR STRENGTHS PARAMETERS AND CORRESPONDING UNIT WEIGHTS IN ACCORDANCE WITH THE FOLLOWING GUIDELINES:
    - A. PRIOR AND SUBSEQUENT TO PLACEMENT OF THE FILL, SHEAR TESTS SHALL BE TAKEN ON EACH TYPE OF SOIL OR SOIL MIXTURE TO BE USED FOR ALL FILL SLOPES STEEPER THAN THREE (3) HORIZONTAL TO ONE VERTICAL.
    - B. SHEAR TEST RESULTS FOR THE PROPOSED FILL MATERIAL MUST MEET OR EXCEED THE DESIGN VALUES USED IN THE GEOTECHNICAL REPORT TO DETERMINE SLOPE STABILITY REQUIREMENTS. OTHERWISE, THE SLOPE MUST BE REEVALUATED USING THE ACTUAL SHEAR TEST VALUE OF THE FILL MATERIAL THAT IS IN PLACE.
    - C. FILL SOILS SHALL BE FREE OF DELETERIOUS MATERIALS.
35. FILL SHALL NOT BE PLACED UNTIL STRIPPING OF VEGETATION, REMOVAL OF UNSUITABLE SOILS, AND INSTALLATION OF SUBDRAIN (IF ANY) HAVE BEEN INSPECTED AND APPROVED BY THE SOIL ENGINEER. THE BUILDING OFFICIAL MAY REQUIRE A "STANDARD TEST METHOD FOR MOISTURE, ASH, ORGANIC MATTER, PEAT OR OTHER ORGANIC SOILS" ASTM D-2974-87 ON ANY SUSPECT MATERIAL. DETRIMENTAL AMOUNTS OF ORGANIC MATERIAL SHALL NOT BE PERMITTED IN FILLS. SOIL CONTAINING SMALL AMOUNTS OF ROOTS MAY BE ALLOWED PROVIDED THAT THE ROOTS ARE IN A QUANTITY AND DISTRIBUTED IN A MANNER THAT WILL NOT BE DETRIMENTAL TO THE FUTURE USE OF THE SITE AND THE SOILS ENGINEER APPROVES THE USE OF SUCH MATERIAL.
36. ROCK OR SIMILAR MATERIAL GREATER THAN 12 INCHES IN DIAMETER SHALL NOT BE PLACED IN THE FILL UNLESS RECOMMENDATIONS FOR SUCH PLACEMENT HAVE BEEN SUBMITTED BY THE SOIL ENGINEER AND APPROVED IN ADVANCE BY THE BUILDING OFFICIAL. LOCATION, EXTENT, AND ELEVATION OF ROCK DISPOSAL AREAS MUST BE SHOWN ON AN "AS BUILT" GRADING PLAN.
37. CONTINUOUS INSPECTION BY THE SOIL ENGINEER, OR A RESPONSIBLE REPRESENTATIVE, SHALL BE PROVIDED DURING ALL FILL PLACEMENT AND COMPACTION OPERATIONS WHERE FILLS HAVE A DEPTH GREATER THAN 30 FEET OR SLOPE SURFACE STEEPER THAN 2:1. (SECTION 88.03.120 OF THE SAN BERNARDINO COUNTY DEVELOPMENT CODE.)
38. CONTINUOUS INSPECTION BY THE SOIL ENGINEER, OR A RESPONSIBLE REPRESENTATIVE, SHALL BE PROVIDED DURING ALL SUBDRAIN INSTALLATION. (SECTION 88.03.120 OF THE SAN BERNARDINO COUNTY DEVELOPMENT CODE.)
39. ALL SUBDRAIN OUTLETS ARE TO BE SURVEYED FOR LINE AND ELEVATION. SUBDRAIN INFORMATION MUST BE SHOWN ON AN "AS BUILT" GRADING PLAN.
40. FILL SLOPES IN EXCESS OF 2:1 STEEPNESS RATIO ARE TO BE CONSTRUCTED BY THE PLACEMENT OF SOIL AT SUFFICIENT DISTANCE BEYOND THE PROPOSED FINISH SLOPE TO ALLOW COMPACTION EQUIPMENT TO BE OPERATED AT THE OUTER LIMITS OF THE FINAL SLOPE SURFACE. THE EXCESS FILL IS TO BE REMOVED PRIOR TO COMPLETION OF ROUGH GRADING. OTHER CONSTRUCTION PROCEDURES MAY BE USED WHEN IT IS DEMONSTRATED TO THE SATISFACTION OF THE BUILDING OFFICIAL THAT THE ANGLE OF SLOPE, CONSTRUCTION METHOD AND OTHER FACTORS WILL HAVE EQUIVALENT EFFECT. (SECTION 88.03.120 OF THE SAN BERNARDINO COUNTY DEVELOPMENT CODE.)

ENVIRONMENTAL QUALITY NOTES:

- A. TEMPORARY EROSION CONTROL DEVICES SHALL BE INSTALLED AT ALL TIMES IN CONFORMANCE WITH THE APPROVED STORMWATER POLLUTION PREVENTION PLAN (SWPPP) AND THE NPDES GENERAL CONSTRUCTION PERMIT. THEY SHALL BE RELOCATED, REPLACED OR MODIFIED AS WORK PROGRESSES.
- B. ALL CLEARING, EARTH MOVING OR EXCAVATION ACTIVITIES SHALL CEASE DURING PERIODS WHEN WINDS EXCEED 15 MILES PER HOUR.
- C. ALL MATERIALS TAKEN OFF-SITE SHALL BE EITHER SUFFICIENTLY WATERED OR SECURELY COVERED TO PREVENT EXCESSIVE AMOUNTS OF DUST.
- D. ROADS AND ACCESS LANES ADJACENT TO THE SITE SHALL BE SWEPT AS NEEDED TO REMOVE SILT, WHICH MAY HAVE ACCUMULATED FROM CONSTRUCTION ACTIVITIES.
- E. ENGINES MUST BE MAINTAINED IN GOOD CONDITION ACCORDING TO MANUFACTURER'S SPECIFICATIONS. BOTH GRADING AND CONSTRUCTION ACTIVITIES ARE TO BE SCHEDULED TO EVEN OUT EMISSION PEAKS.
- F. THE SITE SHALL BE FENCED TO REDUCE WIND-BLOWN DUST. CONSTRUCTION MATERIALS NOT STORED BEHIND THE TEMPORARY FENCES SHALL BE COVERED. ALL STORED SOIL AND SAND SHALL BE COVERED OR TREATED WITH SOIL BINDERS, WHETHER INSIDE OR OUTSIDE THE TEMPORARY WALL. ALL DEBRIS SHALL BE CLEANED UP DAILY AND PUT IN A DUMPSTER WHICH SHALL HAVE A LID AND THE LID SHALL BE SECURED AT THE END OF THE DAY.
- G. EVERY REASONABLE PRECAUTION SHALL BE TAKEN TO MINIMIZE FUGITIVE DUST EMISSIONS FROM WRECKING, EXCAVATION, GRADING, CLEARING OF LAND AND SOLID WASTE DISPOSAL OPERATIONS.
- H. ALL LOOSE SOIL AND DEBRIS SHALL BE REMOVED FROM THE STREET AREAS UPON STARTING OPERATIONS, AND PERIODICALLY THEREAFTER DIRECTED BY THE INSPECTOR OF RECORD.
- I. A 12-INCH BERM OR SANDBAG BARRIER SHALL BE MAINTAINED ALONG THE TOP OF THE SLOPES ON WHICH GRADING IS NOT IN PROGRESS.
- J. STANDBY CREW FOR EMERGENCY WORK SHALL BE AVAILABLE AT ALL TIMES DURING THE RAINY SEASON. NECESSARY MATERIAL SHALL BE AVAILABLE ON SITE AND STOCKPILED AT CONVENIENT LOCATIONS TO FACILITATE RAPID CONSTRUCTION OF TEMPORARY DEVICES OR TO REPAIR ANY DAMAGED EROSION CONTROL MEASURES WHEN RAIN IS IMMINENT, OR WHEN THE INSPECTOR OF RECORD SO ORDERS.
- K. VELOCITY CHECK DAMS SHALL BE PROVIDED IN ALL UNPAVED GRADED CHANNELS AT THE INTERVALS INDICATED BELOW:

GRADE OF CHANNEL	INTERVALS BETWEEN CHECK DAMS
LESS THAN 3%	100 FEET
3% TO 6%	50 FEET
OVER 6%	25 FEET

- L. AFTER A RAINSTORM, ALL SILT AND DEBRIS SHALL BE REMOVED FROM CHECK DAMS AND DESILTING BASINS AT ALL GRADED SLOPES.
- M. SURFACE PROTECTION MEASURES DAMAGED DURING A RAINSTORM SHALL ALSO BE IMMEDIATELY REPAIRED.
- N. THE FACES OF CUT AND FILL SLOPES SHALL BE PREPARED AND MAINTAINED TO CONTROL AGAINST EROSION.
- O. PROVIDE A PLASTIC COVER OVER ALL SLOPES. PLACE SANDBAGS ON TOP OF PLASTIC TO PREVENT FROM MOVING, AS DIRECTED BY THE INSPECTOR OF RECORD.

EROSION AND SEDIMENT CONTROL PLAN GENERAL NOTES

1. IN CASE OF EMERGENCY, CALL __________ AT __________.
2. TOTAL DISTURBED AREA ________ WDID # __________________
   I. RISK (1) 2 3 (CIRCLE ONE AS DETERMINED BY STATE GENERAL PERMIT FOR SITES GREATER THAN 1 ACRE)
3. A STAND-BY CREW FOR EMERGENCY WORK SHALL BE AVAILABLE AT ALL TIMES DURING THE RAINY SEASON (NOVEMBER 1 TO APRIL 15). NECESSARY MATERIALS SHALL BE AVAILABLE ON-SITE AND STOCKPILED AT CONVENIENT LOCATIONS TO FACILITATE RAPID CONSTRUCTION OF EMERGENCY DEVICES WHEN RAIN IS IMMINENT.
4. EROSION CONTROL DEVICES SHOWN ON THIS PLAN MAY BE REMOVED WHEN APPROVED BY THE BUILDING OFFICIAL IF THE GRADING OPERATION HAS PROGRESSED TO THE POINT WHERE THEY ARE NO LONGER REQUIRED.
5. GRADED AREAS ADJACENT TO FILL SLOPES LOCATED AT THE SITE PERIMETER MUST DRAIN AWAY FROM THE TOP OF SLOPE AT THE CONCLUSION OF EACH WORKING DAY. ALL LOOSE SOILS AND DEBRIS THAT MAY CREATE POTENTIAL HAZARD TO OFF-SITE PROPERTY SHALL BE STABILIZED OR REMOVED FROM THE SITE ON A DAILY BASIS.
6. ALL SILT AND DEBRIS SHALL BE REMOVED FROM ALL DEVICES WITHIN 24 HOURS AFTER EACH RAINSTORM AND BE DISPOSED OF PROPERLY.
7. A GUARD SHALL BE POSTED ON THE SITE WHENEVER THE DEPTH OF WATER IN ANY DEVICE EXCEEDS TWO FEET. THE DEVICE SHALL BE DRAINED OR PUMPED DRY WITHIN 24 HOURS AFTER EACH RAINSTORM. PUMPING AND DRAINING OF ALL BASINS AND DRAINAGE DEVICES MUST COMPLY WITH THE APPROPRIATE BMP FOR DEWATERING OPERATIONS.
8. THE PLACEMENT OF ADDITIONAL DEVICES TO REDUCE EROSION DAMAGE AND CONTAIN POLLUTANTS WITHIN THE SITE IS LEFT TO THE DISCRETION OF THE FIELD ENGINEER. ADDITIONAL DEVICES AS NEEDED SHALL BE INSTALLED TO RETAIN SEDIMENTS AND OTHER POLLUTANTS ON SITE.
9. DESILTING BASINS MAY NOT BE REMOVED OR MADE INOPERABLE BETWEEN NOVEMBER 1 AND APRIL 15 OF THE FOLLOWING YEAR WITHOUT THE APPROVAL OF THE BUILDING OFFICIAL.
10. STORM WATER POLLUTION AND EROSION CONTROL DEVICES ARE TO BE MODIFIED, AS NEEDED, AS THE PROJECT PROGRESSES, THE DESIGN AND PLACEMENT OF THESE DEVICES IS THE RESPONSIBILITY OF THE FIELD ENGINEER. PLANS REPRESENTING CHANGES MUST BE SUBMITTED FOR APPROVAL IF REQUESTED BY THE BUILDING OFFICIAL.
11. EVERY EFFORT SHOULD BE MADE TO ELIMINATE THE DISCHARGE OF NON-STORM WATER FROM THE PROJECT SITES AT ALL TIMES.
12. ERODED SEDIMENTS AND OTHER POLLUTANTS MUST BE RETAINED ON-SITE AND MAY NOT BE TRANSPORTED FROM THE SITE VIA SHEET FLOW, SWALES, AREA DRAINS, NATURAL DRAINAGE COURSES, OR WIND.
13. STOCKPILES OF EARTH AND OTHER RCONSTRUCTION-RELATED MATERIALS MUST BE PROTECTED FROM BEING TRANSPORTED FROM THE SITE BY THE FORCES OF WIND OR WATER.
14. FUELS, OILS, SOLVENTS, AND OTHER TOXIC MATERIALS MUST BE STORED IN ACCORDANCE WITH THEIR LISTING AND ARE NOT TO CONTAMINATE THE SOILS AND SURFACE WATERS. ALL APPROVED STORAGE CONTAINERS ARE TO BE PROTECTED FROM THE WEATHER. SPILLS MUST BE CLEANED UP IMMEDIATELY AND DISPOSED OF IN A PROPER MANNER. SPILLS MAY NOT BE WASHED INTO THE DRAINAGE SYSTEM.
15. EXCESS OR WASTE CONCRETE MAY NOT BE WASHED INTO THE PUBLIC WAY OR ANY OTHER DRAINAGE SYSTEM. PROVISIONS SHALL BE MADE TO RETAIN CONCRETE WASTES ON-SITE UNTIL THEY CAN BE DISPOSED OF AS SOLID WASTE.
16. DEVELOPERS/CONTRACTORS ARE RESPONSIBLE TO INSPECT ALL EROSION CONTROL DEVICES AND BMPS ARE INSTALLED AND FUNCTIONING PROPERLY IF THERE IS A 50% OR GREATER PROBABILITY OF PREDICTED PRECIPITATION, AND AFTER ACTUAL PRECIPITATION. A CONSTRUCTION SITE INSPECTION CHECKLIST AND INSPECTION LOG SHALL BE MAINTAINED AT THE PROJECT SITE AT ALL TIMES AND AVAILABLE FOR REVIEW BY THE BUILDING OFFICIAL (COPIES OF SELF-INSPECTION CHECK LIST AND INSPECTION LOGS ARE AVAILABLE UPON REQUEST).
17. TRASH AND CONSTRUCTION-RELATED SOLID WASTES MUST BE DEPOSITED INTO A COVERED RECEPTACLE TO PREVENT CONTAMINATION OF RAINWATER AND DISPERSAL BY WIND.
18. SEDIMENTS AND OTHER MATERIALS MAY NOT BE TRACKED FROM THE SITE BY VEHICLE TRAFFIC. THE CONSTRUCTION ENTRANCE ROADWAYS MUST BE STABILIZED SO AS TO INHIBIT SEDIMENTS FROM BEING DEPOSITED INTO THE PUBLIC WAY. ACCIDENTAL DEPOSITIONS MUST BE SWEPT UP IMMEDIATELY AND MAY NOT BE WASHED DOWN BY RAIN OR OTHER MEANS.
19. ANY SLOPES WITH DISTURBED SOILS OR DENUDED OF VEGETATION MUST BE STABILIZED SO AS TO INHIBIT EROSION BY WIND AND WATER.
20. AS THE ENGINEER/QSD OF RECORD, I HAVE SELECTED APPROPRIATE BMPS TO EFFECTIVELY MINIMIZE THE NEGATIVE IMPACTS OF THIS PROJECT'S CONSTRUCTION ACTIVITIES ON STORM WATER QUALITY. THE PROJECT OWNER AND CONTRACTOR ARE AWARE THAT THE SELECTED BMPS MUST BE INSTALLED, MONITORED, AND MAINTAINED TO ENSURE THEIR EFFECTIVENESS.

    ______________________________ CIVIL ENGINEER/QSD SIGNATURE ____________ DATE

21. THE FOLLOWING NOTES MUST BE ON THE PLAN:

    AS THE PROJECT OWNER OR AUTHORIZED AGENT OF THE OWNER, "I CERTIFY THAT THIS DOCUMENT AND ALL ATTACHMENTS WERE PREPARED UNDER MY DIRECTION OR SUPERVISION IN ACCORDANCE WITH THE SYSTEM DESIGNED TO ENSURE THAT A QUALIFIED PERSONNEL PROPERLY GATHER AND EVALUATE THE INFORMATION SUBMITTED. BASED ON MY INQUIRY OF THE PERSON OR PERSONS WHO MANAGE THE SYSTEM OR THOSE PERSONS DIRECTLY RESPONSIBLE FOR GATHERING THE INFORMATION, TO THE BEST OF MY KNOWLEDGE AND BELIEF, THE INFORMATION SUBMITTED IS TRUE, ACCURATE, AND COMPLETE. I AM AWARE THAT SUBMITTING FALSE/AND OR INACCURATE INFORMATION, FAILING TO UPDATE THE ESCP TO REFLECT CURRENT CONDITIONS, OR FAILING TO PROPERLY AND/OR ADEQUATELY IMPLEMENT THE ESCP MAY RESULT IN REVOCATION OF GRADING AND/OR OTHER PERMITS OR OTHER SANCTIONS PROVIDED BY LAW."

    ______________________________ OWNER OR AUTHORIZED REPRESENTATIVE (PERMITTEE) ____________ DATE

22. DEVELOPERS/CONTRACTORS ARE RESPONSIBLE TO INSPECT ALL EROSION CONTROL DEVICES AND BMPS ARE INSTALLED AND FUNCTIONING PROPERLY AS REQUIRED BY THE STATE CONSTRUCTION GENERAL PERMIT. A CONSTRUCTION SITE INSPECTION CHECKLIST AND INSPECTION LOG SHALL BE MAINTAINED AT THE PROJECT SITE AT ALL TIMES AND AVAILABLE FOR REVIEW BY THE BUILDING OFFICIAL.
23. THE FOLLOWING BMPS ARE FROM THE "2009 CONSTRUCTION BMP HANDBOOK/PORTAL" MUST BE IMPLEMENTED FOR ALL CONSTRUCTION ACTIVITIES AS APPLICABLE. AS AN ALTERNATIVE, DETAILS FROM THE "CALTRANS STORMWATER QUALITY HANDBOOKS, CONSTRUCTION SITE BEST MANAGEMENT PRACTICES (BMP) MANUAL" MAY BE USED. ADDITIONAL MEASURES MAY BE REQUIRED IF DEEMED APPROPRIATE BY THE BUILDING OFFICIAL.

NOTICE TO CONTRACTORS:

1. PRIOR TO COMMENCING CONSTRUCTION, THE CONTRACTOR SHALL VERIFY ALL JOIN ELEVATION CONDITIONS FOR GRADING AND DRAINAGE WORK. IF CONDITIONS DIFFER FROM THOSE SHOWN ON THE PLANS, THE CONTRACTOR SHALL NOTIFY THE ENGINEER AND SHALL NOT BEGIN CONSTRUCTION UNTIL THE CHANGED CONDITIONS HAVE BEEN EVALUATED.
2. THE EXISTENCE, LOCATION AND CHARACTERISTICS OF UNDERGROUND UTILITY INFORMATION SHOWN ON THESE PLANS HAVE BEEN OBTAINED FROM A REVIEW OF AVAILABLE RECORD DATA. NO REPRESENTATION IS MADE AS TO THE ACCURACY OR COMPLETENESS OF SAID UTILITY INFORMATION. THE CONTRACTOR SHALL TAKE PRECAUTIONARY MEASURES TO PROTECT THE UTILITY LINES SHOWN AND ANY OTHER LINES NOT OF RECORD OR NOT SHOWN ON THESE PLANS.
3. THE CONTRACTOR FURTHER SHALL ASSUME SOLE AND COMPLETE RESPONSIBILITY FOR JOB SITE CONDITIONS, INCLUDING SAFETY OF ALL PERSONS AND PROPERTY, DURING THE COURSE OF CONSTRUCTION OF THIS PROJECT. THIS REQUIREMENT SHALL APPLY CONTINUOUSLY, AND SHALL NOT BE LIMITED TO NORMAL WORKING HOURS. THE CONTRACTOR SHALL DEFEND, INDEMNIFY AND HOLD THE OWNER AND ENGINEER HARMLESS FROM ANY AND ALL LIABILITY, REAL OR ALLEGED, IN CONNECTION WITH THE PERFORMANCE OF WORK ON THIS PROJECT
4. THE CONTRACTOR SHALL FAMILIARIZE HIMSELF WITH THE PLANS, THE SOILS AND/OR GEOLOGY REPORTS, AND THE SITE CONDITIONS PRIOR TO COMMENCING WORK.
5. THE CONTRACTOR SHALL BE RESPONSIBLE FOR THE REVIEW AND COORDINATION OF ALL DRAWINGS AND SPECIFICATIONS PRIOR TO THE START OF CONSTRUCTION. ANY DISCREPANCIES THAT OCCUR SHALL BE BROUGHT TO THE ATTENTION OF THE ARCHITECT OR THE ENGINEER, PRIOR TO THE START OF CONSTRUCTION SO THAT A CLARIFICATION CAN BE ISSUED. ANY WORK PERFORMED IN CONFLICT WITH THE CONTRACT DOCUMENTS OR ANY CODE REQUIREMENTS SHALL BE CORRECTED BY THE CONTRACTOR AT THEIR OWN EXPENSE AND NOT TO THE EXPENSE OF THE OWNER OR ENGINEER.
6. ALL CHANGES TO THE CONSTRUCTION DOCUMENTS FOR THIS PROJECT SHALL BE DONE IN WRITING AND APPROVED BY THE ENGINEER OF RECORD. THE ENGINEER SHALL NOT BE RESPONSIBLE, OR LIABLE FOR UNAUTHORIZED CHANGES OR USES OF THE CONSTRUCTION DOCUMENTS.
7. SHOULD CONFLICTING INFORMATION BE FOUND ON THE PLANS, THE CONTRACTOR SHALL NOTIFY THE PROJECT ARCHITECT OR ENGINEER BEFORE PROCEEDING WITH THE WORK IN QUESTION.
8. THE CONTRACTOR SHALL OBTAIN AN OCCUPATIONAL SAFETY AND HEALTH ADMINISTRATION (O.S.H.A.) PERMIT FROM THE CALIFORNIA DIVISION OF INDUSTRIAL SAFETY PRIOR TO THE CONSTRUCTION OF TRENCHES OR EXCAVATIONS WHICH ARE 5 FEET OR DEEPER.
9. NOTES AND DETAILS ON DRAWINGS SHALL TAKE PRECEDENCE OVER GENERAL NOTES AND TYPICAL DETAILS.

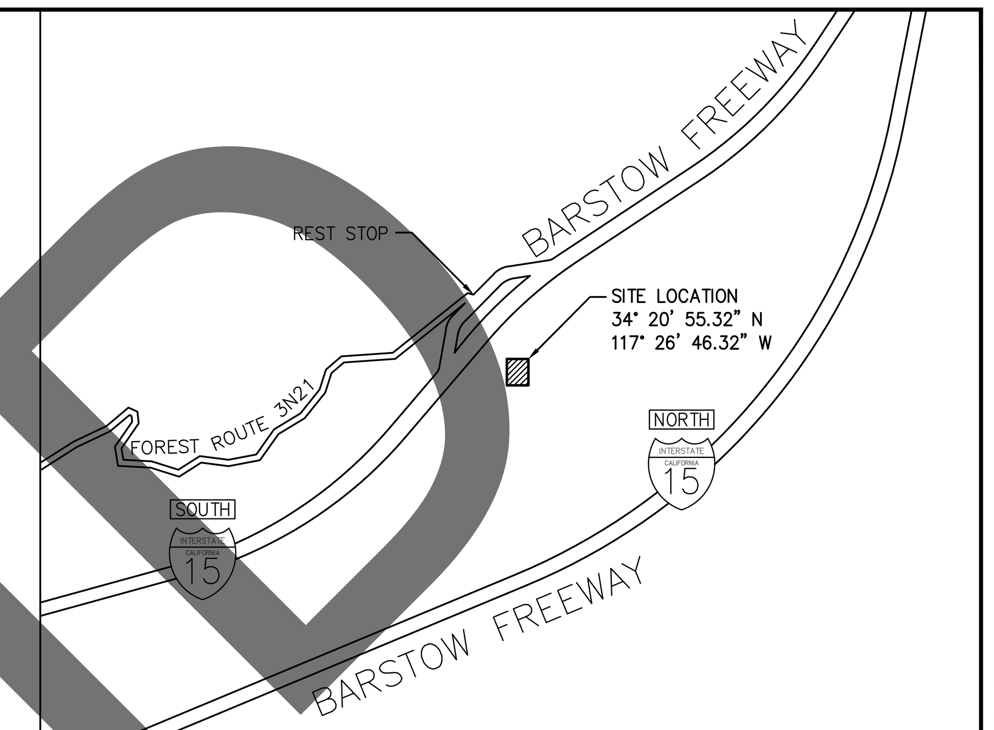

VICINITY MAP
NOT TO SCALE

PREPARED BY
BRANDOW & JOHNSTON
700 SOUTH FLOWER ST. SUITE 1800
LOS ANGELES, CA. 90017
TEL (213) 596-4500
FAX (213) 596-4599

REPRESENTATIVE:

ED MELO, PE
DIRECTOR OF CIVIL ENGINEERING

PREPARED FOR
OWNER:

COUNTY OF SAN BERNARDINO
385 N. ARROWHEAD AVENUE
SAN BERNARDINO, CA 92415

INDEX OF DRAWINGS

C1.00	TOPOGRAPHIC SURVEY
GR1.0	GRADING AND EROSION CONTROL GENERAL NOTES
GR1.1	GRADING PLAN AND TYPICAL DETAILS
GR1.2	EROSION CONTROL PLAN

ABBREVIATIONS

AC	ASPHALT CONCRETE	NTS	NOT TO SCALE
BW	BACK OF WALK	PA	PLANTER AREA
BLDG	BUILDING	PIV	POST INDICATOR VALVE
BM	BENCH MARK	POC	POINT OF CONNECTION
CB	CATCH BASIN	PCC	PORTLAND CEMENT CONCRETE
CAB	CRUSHED AGGREGATE BASE	PRV	PRESSURE REDUCING VALVE
CD	A/C CONDENSATE DRAIN	PVC	POLYVINYL CHLORIDE
CL	CENTER LINE	R/RAD	RADIUS
CMU	CONCRETE MASONRY UNIT	RP	REDUCED PRESSURE PRINCIPAL BACKFLOW
CO	CLEANOUT	SD	STORM DRAIN
CONC	CONCRETE	SF	SQUARE FEET
CF	CURB FACE	SSMH	SANITARY SEWER MANHOLE
DI	DRAIN INLET	SS	SANITARY SEWER
DS	DOWN SPOUT	STD	STANDARD
ELEC	ELECTRIC, ELECTRICAL	SDMH	STORM DRAIN MANHOLE
(E)	EXISTING	TC	TOP OF CURB
FF	FINISHED FLOOR	TEL	TELEPHONE
FG	FINISHED GRADE (LANDSCAPE)	TF	TOP OF FOOTING
FS	FINISHED SURFACE (HARDSCAPE)	TG	TOP OF GRATE
FH	FIRE HYDRANT	TW	TOP OF WALL
FL	FLOW LINE	TYP	TYPICAL
FT	FOOT OR FEET	TV	TELEVISION
GV	GATE VALVE	U.N.O	UNLESS NOTED OTHERWISE
GW	GREASE WASTE	VLT	VAULT
HP	HIGH POINT	VCP	VITRIFIED CLAY PIPE
HDPE	HIGH-DENSITY POLYETHYLENE	W	WATER
INV.	INVERT	WM	WATER METER
LP	LOW POINT	WV	WATER VALVE
MAX.	MAXIMUM		
MH	MANHOLE		

LEGEND

LIMIT OF REMEDIAL GRADING
GRADE BREAK LINE
FLOW LINE
RIDGE LINE (R)
PROPOSED CONTOUR (1' INTERVAL) (XXXX)
EXISTING CONTOUR (1' INTERVAL) ((XXXX))
PROPOSED SPOT ELEVATION (XXXX.XX FS)
EXISTING SPOT ELEVATION (V.I.F.) ((XXXX.XX) FS)
PROPOSED FENCE
EXISTING FENCE
PROPOSED CONCRETE PAVEMENT
PROPOSED GRAVEL PATCH
PROPOSED BUILDING OUTLINE
PROPOSED 2:1 SLOPE

Underground Service Alert of Southern California
CALL BEFORE YOU DIG
Call: TOLL FREE 1-800 227-2600
TWO WORKING DAYS BEFORE YOU DIG

SALASO'BRIEN
expect a difference
3700 South Susan Street, Ste 150
Santa Ana, California 92704
949.517.4900 | 408.297.2995 (f)
salasobrien.com
California | Georgia | Louisiana
Montana | Texas | Washington
Licensed in 50 States

BRANDOW & JOHNSTON
STRUCTURAL+CIVIL ENGINEERS (B&J HBK, INC.)
700 S FLOWER ST #1200, LOS ANGELES, CA 90017
T: (213) 596-4500 WWW.BJSCE.COM
EST. 1945
B&J PROJECT #: C21-0024

REGISTERED PROFESSIONAL ENGINEER
EDGARD S. MELO
No. C80534
CIVIL
State of California
FOR BRANDOW & JOHNSTON

SAN BERNARDINO COUNTY

800MHZ UPGRADES - CAJON PASS TOWER

WBSE #10.10.1011
CIP #20-225

ISSUE		
MARK	DATE	DESCRIPTION
	12/23/21	95% CD
	12/16/22	100% CD

SOBE PROJECT NO:	2002862
DATE:	12/16/22
DRAWN BY:	CB (CIVIL)
CHECKED BY:	GF (CIVIL)
APPROVED BY:	EM (CIVIL)

SHEET TITLE
GRADING AND EROSION CONTROL GENERAL NOTES
SCALE: AS NOTED
THIS DRAWING IS 30" X 42" AT FULL SIZE

GR1.0

THIS DRAWING IS 30" X 42" AT FULL SIZE, 15" X 21" AT HALF SIZE. © 2015 BY SALAS O'BRIEN ENGINEERS, INC.
NOT FOR BID

THIS DRAWING IS 30" X 42" AT FULL SIZE, 15" X 21" AT HALF SIZE. © 2015 BY SALAS O'BRIEN ENGINEERS, INC.

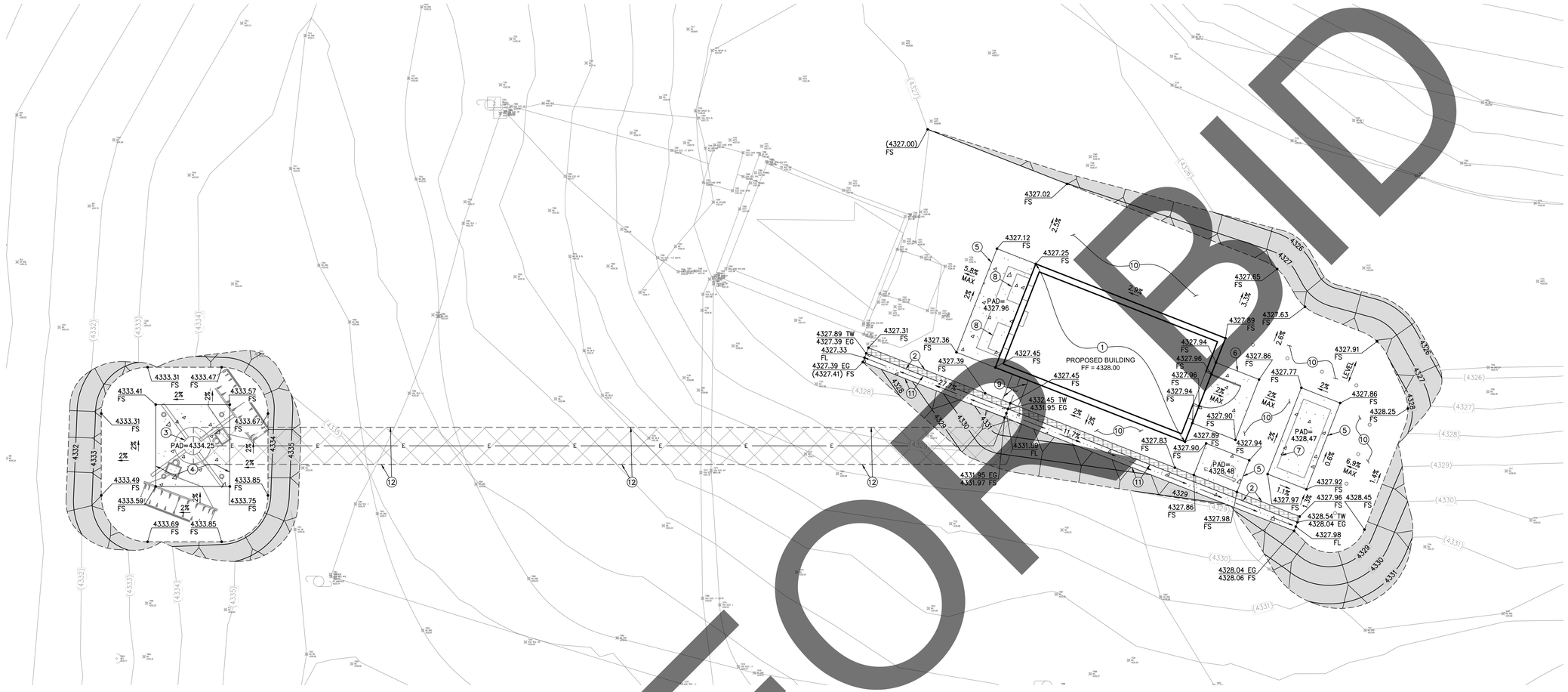

GRADING KEY NOTES

1. CONSTRUCT PROPOSED BUILDING PER ARCHITECTURAL AND STRUCTURAL PLANS.
2. CONSTRUCT RETAINING WALL PER ARCHITECTURAL AND STRUCTURAL PLANS.
3. INSTALL MONOPOLE TOWER PER ARCHITECTURAL AND STRUCTURAL PLANS.
4. CONSTRUCT CONCRETE PAD AND FOOTING FOR MONOPOLE PER STRUCTURAL PLANS.
5. CONSTRUCT CONCRETE PAD FOR ELECTRICAL EQUIPMENT PER STRUCTURAL PLANS.
6. CONSTRUCT CONCRETE PAVEMENT FLUSH WITH GRAVEL PER DETAIL 1 HEREON.
7. INSTALL GENERATOR AND FUEL TANK PER ELECTRICAL AND STRUCTURAL PLANS.
8. INSTALL HVAC UNITS PER ARCHITECTURAL AND MECHANICAL PLANS.
9. INSTALL CABLE COVER PER ARCHITECTURAL AND ELECTRICAL PLANS.
10. CONSTRUCT GRAVEL PATCH WITH GEO-FABRIC PER DETAIL 2 HEREON.
11. CONSTRUCT CONCRETE GUTTER PER DETAIL 4 HEREON.
12. TRENCH AND BACKFILL PER SUPPLEMENTARY NOTE 1 HEREON.

LEGEND

- GRADE BREAK LINE
- PROPOSED CONTOUR (1' INTERVAL)
- EXISTING CONTOUR (1' INTERVAL)
- XXXX.XX FS — PROPOSED SPOT ELEVATION
- (XXXX.XX) FS — EXISTING SPOT ELEVATION (V.I.F.)
- PROPOSED 2:1 SLOPE
- PROPOSED BUILDING OUTLINE
- PROPOSED CONCRETE PAVEMENT
- PROPOSED RETAINING WALL
- UTILITY TRENCHING LIMITS

NORTH

GRADING PLAN

0' 2.5' 5' 10'

GRAPHIC SCALE : 1" = 5'

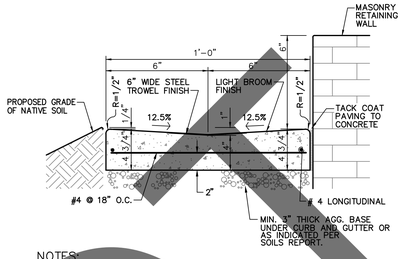

NOTES:

1. PORTLAND CEMENT CONCRETE, fc'=3200 psi, W/C RATIO 0.5 MAX.

LONGITUDINAL CONCRETE GUTTER — SCALE: NO SCALE — 4

SUPPLEMENTARY NOTES

1. BACKFILL MUST BE PLACED IN THIN LAYERS, NOT EXCEEDING 12 INCHES IN LOOSE THICKNESS, WELL-BLENDED WITH CONSISTENT TEXTURE, MOISTURE CONDITIONED TO AT LEAST OPTIMUM MOISTURE CONTENT, AND COMPACTED TO AT LEAST 90 PERCENT OF THE MAXIMUM DRY DENSITY AS DETERMINED BY ASTM STANDARD D-1557. THE UPPERMOST 12 INCHES OF TRENCH BACKFILL BELOW PAVEMENT SECTIONS MUST BE COMPACTED TO AT LEAST 95 PERCENT OF THE MAXIMUM DRY DENSITY AS DETERMINED BY ASTM STANDARD D-1557. MOISTURE CONTENT WITHIN 2 PERCENT OF OPTIMUM MUST BE MAINTAINED WHILE COMPACTING THIS UPPER 12-INCH TRENCH BACKFILL ZONE. CONTRACTOR SHALL BACKFILL TRENCH WITH SUITABLE METHOD, AS INFORMED BY THE PRECEDING INFORMATION.
2. ANY EXISTING PAVEMENT BEYOND THE SCOPE AREA OF WORK WHICH HAS BEEN DAMAGED DUE TO CONSTRUCTION ACTIVITIES DURING EXECUTION OF THIS PROJECT SHALL BE ULTIMATELY REPLACED BY THE CONTRACTOR AT THEIR OWN EXPENSE.

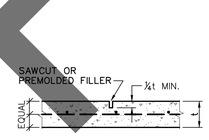

TYPE 'A'
CONTROL JOINT

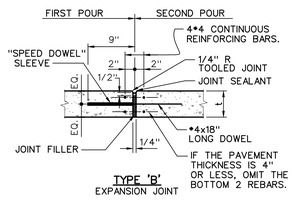

TYPE 'B'
EXPANSION JOINT

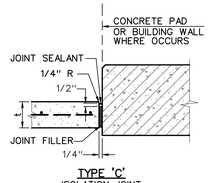

TYPE 'C'
ISOLATION JOINT

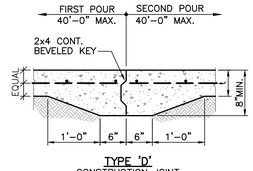

TYPE 'D'
CONSTRUCTION JOINT

SUGGESTED SPACING OF CONTROL JOINTS

PAVEMENT/SLAB THICKNESS (IN)	LESS THAN 3/4 INCH AGGREGATE: SPACING (FT)	LARGER THAN 3/4 INCH AGGREGATE: SPACING (FT)
3	4	6
4	8	10
5	10	13
6	12	15
7	14	18
8	16	20
9	18	23
10	20	25

* GIVEN SPACING ALSO APPLY TO THE DISTANCE FROM CONTROL JOINTS TO PARALLEL ISOLATION JOINTS OR TO PARALLEL EXPANSION JOINTS.

NOTES:

1. SEE SPECIFICATIONS FOR TYPE OF JOINT SEALANT AND JOINT FILLER.
2. PLACE 18" LONG #4 DOWELS AT 24" O.C. (TYPE 'B' ONLY).
3. SPACING OF JOINTS PER TABLE HEREON.
4. STOP SLAB REINFORCING AT EXPANSION JOINT.

CONSTRUCTION JOINTS — SCALE: NO SCALE — 3

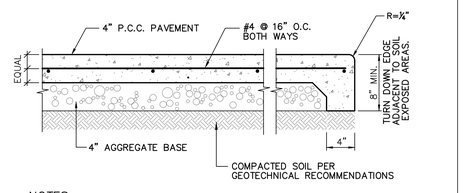

NOTES:

1 – PORTLAND CEMENT CONCRETE, fc=2500 psi
2 – EXPANSION JOINTS–PER DETAIL 3 HEREON, SPACING – 24' O.C. OR LESS TO FIT WITH CONTROL JOINT SPACING PER DETAIL 3 HEREON.
3 – CONTROL JOINTS – PER DETAIL 3 HEREON. SPACING – THE WIDTH OF THE WALKWAY OR PER TABLE ON DETAIL 3 HEREON (WHICHEVER IS LESS).
4 – FINISH – MEDIUM BROOM.
5 – NOT DESIGNED FOR VEHICULAR LOADS.

PEDESTRIAN CONCRETE PAVEMENT — SCALE: NO SCALE — 1

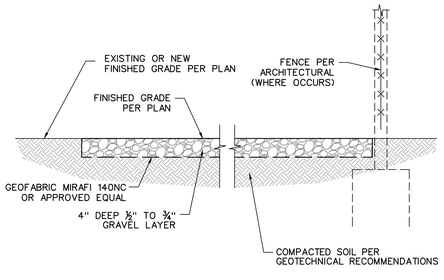

GRAVEL LAYER DETAIL — SCALE: NO SCALE — 2

NOT FOR BID

SALASO'BRIEN
|expect a difference|
3700 South Susan Street, Ste 150
Santa Ana, California 92704
949.517.4900 | 408.297.2995 (f)
salasobrien.com
California | Georgia | Louisiana
Montana | Texas | Washington
Licensed in 50 States

BRANDOW & JOHNSTON
STRUCTURAL•CIVIL ENGINEERS (B&J HBK, INC.)
700 S FLOWER ST #1200, LOS ANGELES, CA 90017
T: (213) 596-4500
WWW.BJSCE.COM
B&J PROJECT #: C21-0024
EST. 1945

REGISTERED PROFESSIONAL ENGINEER
BRAND S. WU
No.C80534
Civil
State of California
FOR BRANDOW & JOHNSTON

SAN BERNARDINO COUNTY

800MHZ UPGRADES - CAJON PASS TOWER

WBSE #10.10.1011
CIP #20-225

ISSUE

MARK	DATE	DESCRIPTION
	12/23/21	95% CD
	12/16/22	100% CD

SOBE PROJECT NO:	2002862
DATE:	12/16/22
DRAWN BY:	CB (CIVIL)
CHECKED BY:	GF (CIVIL)
APPROVED BY:	EM (CIVIL)

SHEET TITLE

GRADING PLAN AND TYPICAL DETAILS

SCALE: AS NOTED
THIS DRAWING IS 30" X 42" AT FULL SIZE

GR1.1

THIS DRAWING IS 30" X 42" AT FULL SIZE, 15" X 21" AT HALF SIZE. © 2015 BY SALAS O'BRIEN ENGINEERS, INC.

NOT FOR BID

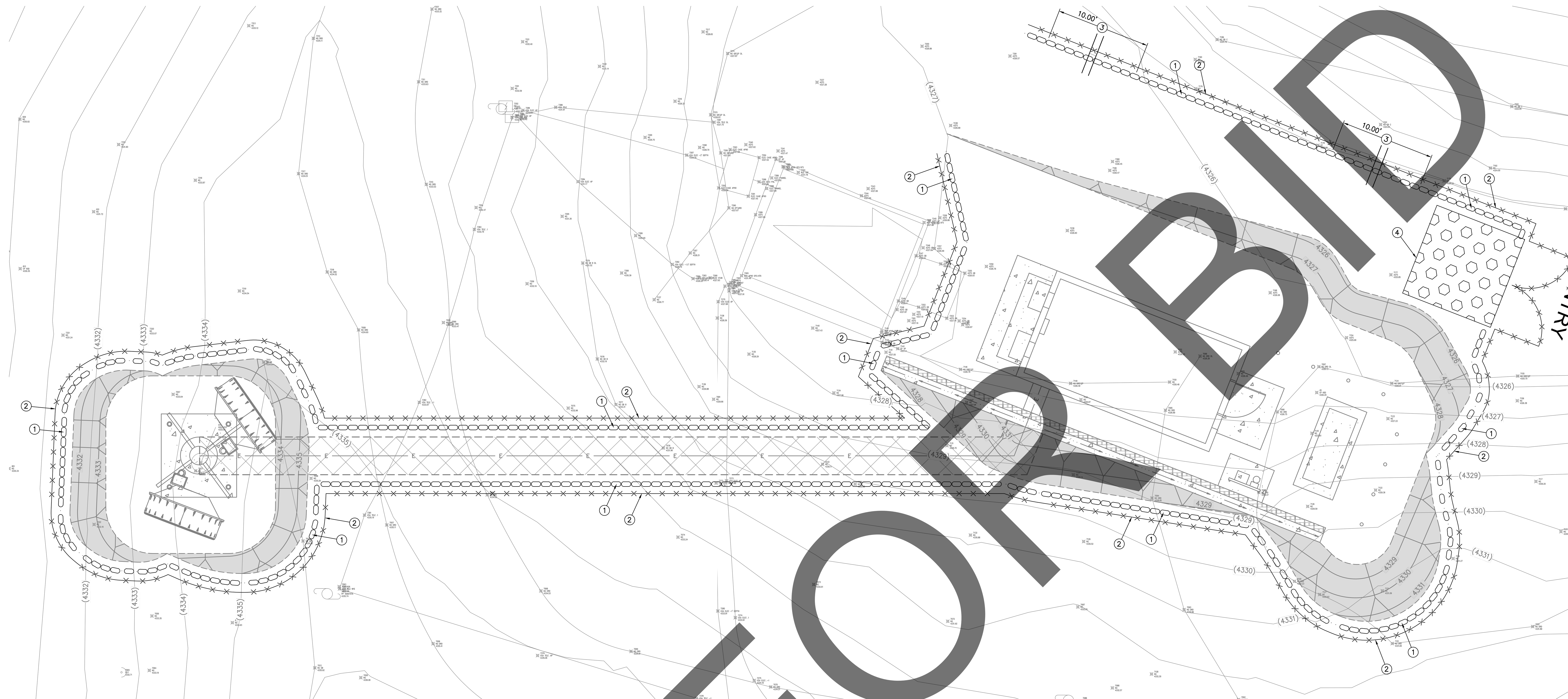

EROSION CONTROL KEY NOTES

1. INSTALL SINGLE ROW GRAVEL BAGS STACKED 2 BAGS HIGH PER SE-8 OF CASQA BMP MANUAL.
2. INSTALL TEMPORARY CONSTRUCTION FENCE WITH WIND SCREEN.
3. INSTALL SEDIMENT TRAP OUTLET PER DETAIL 1 HEREON.
4. INSTALL STABILIZED CONSTRUCTION ENTRANCE PER TC-1 OF CASQA BMP MANUAL.

NOTE TO CONTRACTOR

1. CONTRACTOR TO RELOCATE CONSTRUCTION BMPS AS DEEMED NECESSARY.
2. FOR SPILL PREVENTION AND CONTROLS REFER TO W-4 OF CASQA BMP MANUAL.

LEGEND

- GRAVEL BAGS
- TEMPORARY FENCE
- STABILIZED ENTRANCE

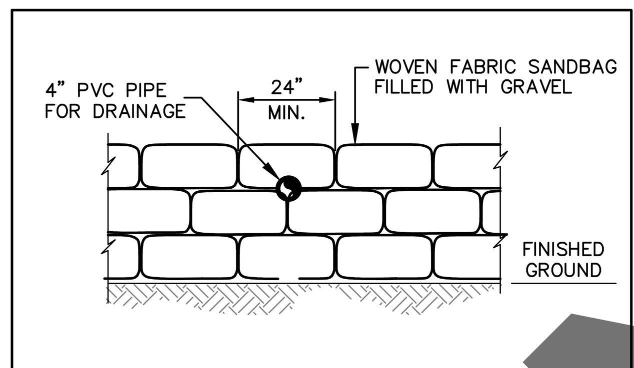

GRAVEL BAG SEDIMENT TRAP 1
NOT TO SCALE

EROSION CONTROL PLAN

NORTH

0' 2.5' 5' 10'
GRAPHIC SCALE : 1" = 5'

BEST MANAGEMENT PRACTICE NOTES

1. EVERY EFFORT SHOULD BE MADE TO ELIMINATE THE DISCHARGE OF NON-STORMWATER FROM THE PROJECT SITE AT ALL TIMES.
2. ERODED SEDIMENTS AND OTHER POLLUTANTS MUST BE RETAINED ON-SITE AND MAY NOT BE TRANSPORTED FROM THE SITE VIA SHEET FLOW, SWALES, AREA DRAINS, NATURAL DRAINAGE COURSES OR WIND.
3. STOCKPILES OF EARTH AND OTHER CONSTRUCTION RELATED MATERIALS MUST BE PROTECTED FROM BEING TRANSPORTED FROM THE SITE BY THE FORCES OF WIND OR WATER.
4. FUELS, OILS, SOLVENTS, AND OTHER TOXIC MATERIALS MUST BE STORED IN ACCORDANCE WITH THEIR LISTING AND ARE NOT TO CONTAMINATE THE SOIL AND SURFACE WATERS. ALL APPROVED STORAGE CONTAINERS ARE TO BE PROTECTED FROM THE WEATHER. SPILLS MUST BE CLEANED UP IMMEDIATELY AND DISPOSED OF IN A PROPER MANNER. SPILLS MAY NOT BE WASHED INTO THE DRAINAGE SYSTEM.
5. EXCESS OR WASTE CONCRETE MAY NOT BE WASHED INTO THE PUBLIC WAY OR ANY OTHER DRAINAGE SYSTEM. PROVISIONS SHALL BE MADE TO RETAIN CONCRETE WASTES ON-SITE UNTIL THEY CAN BE DISPOSED OF AS SOLID WASTE.
6. TRASH AND CONSTRUCTION RELATED SOLID WASTES MUST BE DEPOSITED INTO A COVERED RECEPTACLE TO PREVENT CONTAMINATION OF RAINWATER AND DISPERSAL BY WIND.
7. SEDIMENTS AND OTHER MATERIALS MAY NOT BE TRACKED FROM THE SITE BY VEHICLE TRAFFIC. THE CONSTRUCTION ENTRANCE ROADWAYS MUST BE STABILIZED SO AS TO INHIBIT SEDIMENTS FROM BEING DEPOSITED INTO THE PUBLIC WAY. ACCIDENTAL DEPOSITIONS MUST BE SWEPT UP IMMEDIATELY AND MAY NOT BE WASHED DOWN BY RAIN OR OTHER MEANS.
8. ANY SLOPES WITH DISTURBED SOILS OR DENUDED OF VEGETATION MUST BE STABILIZED SO AS TO INHIBIT EROSION BY WIND AND WATER.
9. "I CERTIFY THAT THIS DOCUMENT AND ALL ATTACHMENTS WERE PREPARED UNDER MY DIRECTION OR SUPERVISION IN ACCORDANCE WITH A SYSTEM DESIGNED TO ENSURE THAT QUALIFIED PERSONNEL PROPERLY GATHER AND EVALUATE THE INFORMATION SUBMITTED. BASED ON MY INQUIRY OF THE PERSON OR PERSONS WHO MANAGE THE SYSTEM OR THOSE PERSONS DIRECTLY RESPONSIBLE FOR GATHERING THE INFORMATION, TO THE BEST OF MY KNOWLEDGE AND BELIEF, THE INFORMATION SUBMITTED IS TRUE, ACCURATE, AND COMPLETE. I AM AWARE THAT SUBMITTING FALSE AND/ OR INACCURATE INFORMATION, FAILING TO UPDATE THE ESCP TO REFLECT CURRENT CONDITIONS, OR FAILING TO PROPERLY AND/ OR ADEQUATELY IMPLEMENT THE ESCP MAY RESULT IN REVOCATION OF GRADING AND/ OR OTHER PERMITS OR OTHER SANCTIONS PROVIDED BY LAW."

PRINT NAME STEVE PAGE
(OWNER OR AUTHORIZED AGENT OF THE OWNER)

SIGNATURE ______________________ DATE ______________
(OWNER OR AUTHORIZED AGENT OF THE OWNER)

THE FOLLOWING BMP'S AS OUTLINED IN, BUT NOT LIMITED TO, THE LATEST EDITION OF THE CASQA CONSTRUCTION BMP ONLINE HANDBOOK OR CALTRANS STORMWATER QUALITY HANDBOOKS (CONSTRUCTION SITE BMP MANUAL), MAY APPLY DURING THE CONSTRUCTION OF THIS PROJECT (ADDITIONAL MEASURES MAY BE REQUIRED IF DEEMED APPROPRIATE BY THE PROJECT ENGINEER OR THE BUILDING OFFICIAL)

EROSION CONTROL

EC1	SCHEDULING
EC2	PRESERVATION OF EXISTING VEGETATION
EC3	HYDRAULIC MULCH
EC4	HYDROSEEDING
EC5	SOIL BINDERS
EC6	STRAW MULCH
EC7	GEOTEXTILES & MATS
EC8	WOOD MULCHING
EC9	EARTH DIKES AND DRAINAGE SWALES
EC10	VELOCITY DISSIPATION DEVICES
EC11	SLOPE DRAINS
EC12	STREAMBANK STABILIZATION
EC13	RESERVED
EC14	COMPOST BLANKETS
EC15	SOIL PREPARATION/ROUGHENING
EC16	NON-VEGATED STABILIZATION

TEMPORARY SEDIMENT CONTROL

SE1	SILT FENCE
SE2	SEDIMENT BASIN
SE3	SEDIMENT TRAP
SE4	CHECK DAM
SE5	FIBER ROLLS
SE6	GRAVEL BAG BERM
SE7	STREET SWEEPING AND VACUUMING
SE8	SANDBAG BARRIER
SE9	STRAW BALE BARRIER
SE10	STORM DRAIN INLET PROTECTION
SE11	ACTIVE TREATMENT SYSTEMS
SE12	TEMPORARY SILT DIKE
SE13	COMPOST SOCKS & BERMS
SE14	BIOFILTER BAGS

WIND EROSION CONTROL

WE1	WIND EROSION CONTROL

TEMPORARY TRACKING CONTROL

TC1	STABILIZED CONSTRUCTION ENTRANCE EXIT
TC2	STABILIZED CONSTRUCTION ROADWAY
TC3	ENTRANCE/OUTLET TIRE WASH

NON-STORMWATER MANAGEMENT

NS1	WATER CONSERVATION PRACTICES
NS2	DEWATERING OPERATIONS
NS3	PAVING AND GRINDING OPERATIONS
NS4	TEMPORARY STREAM CROSSING
NS5	CLEAR WATER DIVERSION
NS6	ILLICIT CONNECTION/DISCHARGE
NS7	POTABLE WATER/IRRIGATION
NS8	VEHICLE AND EQUIPMENT CLEANING
NS9	VEHICLE AND EQUIPMENT FUELING
NS10	VEHICLE AND EQUIPMENT MAINTENANCE
NS11	PILE DRIVING OPERATIONS
NS12	CONCRETE CURING
NS13	CONCRETE FINISHING
NS14	MATERIAL AND EQUIPMENT USE
NS15	DEMOLITION ADJACENT TO WATER
NS16	TEMPORARY BATCH PLANTS

WASTE MANAGEMENT & MATERIAL POLLUTION CONTROL

WM1	MATERIAL DELIVERY AND STORAGE
WM2	MATERIAL USE
WM3	STOCKPILE MANAGEMENT
WM4	SPILL PREVENTION AND CONTROL
WM5	SOLID WASTE MANAGEMENT
WM6	HAZARDOUS WASTE MANAGEMENT
WM7	CONTAMINATION SOIL MANAGEMENT
WM8	CONCRETE WASTE MANAGEMENT
WM9	SANITARY/SEPTIC WASTE MANAGEMENT
WM10	LIQUID WASTE MANAGEMENT

STORM WATER POLLUTION CONTROL

CONSTRUCTION MEANS CONSTRUCTING, CLEARING, GRADING OR EXCAVATION THAT RESULT IN SOIL DISTURBANCE. CONSTRUCTION INCLUDES STRUCTURE TEARDOWN (DEMOLITION). IT DOES NOT INCLUDE ROUTINE MAINTENANCE TO MAINTAIN ORIGINAL LINE AND GRADE, HYDRAULIC CAPACITY, OR ORIGINAL PURPOSE OF FACILITY; EMERGENCY CONSTRUCTION ACTIVITIES REQUIRED TO IMMEDIATELY PROTECT PUBLIC HEALTH AND SAFETY; INTERIOR REMODELING WITH NO OUTSIDE EXPOSURE OF CONSTRUCTION MATERIAL OR CONSTRUCTION WASTE TO STORM WATER; MECHANICAL PERMIT WORK; OR SIGN PERMIT WORK.

(ORDER NO. 01-182, NPDES PERMIT NO. CAS004001 - PART 5: DEFINITIONS)

1. ERODED SEDIMENTS AND POLLUTANTS SHALL BE RETAINED ON SITE AND SHALL NOT BE TRANSPORTED FROM THE SITE VIA SHEET FLOW, SWALES, AREA DRAINS, NATURAL DRAINAGE OR WIND.
2. STOCKPILES OF EARTH AND OTHER CONSTRUCTION-RELATED MATERIALS SHALL BE COVERED AND/OR PROTECTED FROM BEING TRANSPORTED FROM THE SITE BY WIND OR WATER.
3. FUELS, OILS, SOLVENTS AND OTHER TOXIC MATERIALS MUST BE STORED IN ACCORDANCE WITH THEIR LISTING AND SHALL NOT CONTAMINATE THE SOIL NOR THE SURFACE WATERS. ALL APPROVED TOXIC STORAGE CONTAINERS ARE TO BE PROTECTED FROM THE WEATHER. SPILLS MUST BE CLEANED UP IMMEDIATELY AND DISPOSED OF PROPERLY AND SHALL NOT BE WASHED INTO THE DRAINAGE SYSTEM.
4. NON-STORM WATER RUNOFF FROM EQUIPMENT AND VEHICLE WASHING AND ANY OTHER ACTIVITY SHALL BE CONTAINED ON THE PROJECT SITE.
5. EXCESS OR WASTE CONCRETE MAY NOT BE WASHED INTO THE PUBLIC WAY OR ANY DRAINAGE SYSTEM. PROVISIONS SHALL BE MADE TO RETAIN CONCRETE WASTE ON-SITE UNTIL IT CAN BE APPROPRIATELY DISPOSED OF OR RECYCLED.
6. TRASH AND CONSTRUCTION -RELATED SOLID WASTES MUST BE DEPOSITED INTO A COVERED RECEPTACLE TO PREVENT CONTAMINATION OF STORM WATER AND DISPERSAL BY WIND.
7. SEDIMENTS AND OTHER MATERIALS SHALL NOT BE TRACKED FROM THE SITE BY VEHICLE TRAFFIC. THE CONSTRUCTION ENTRANCE ROADWAYS MUST BE STABILIZED SO AS TO INHIBIT SEDIMENTS FROM BEING DEPOSITED INTO THE STREET/PUBLIC WAYS. ACCIDENTAL DEPOSITIONS MUST BE SWEPT UP IMMEDIATELY AND MAY NOT BE WASHED DOWN BY RAIN OR BY ANY OTHER MEANS.
8. RETENTION BASINS OF SUFFICIENT SIZE SHALL BE PROVIDED TO RETAIN STORM WATER RUNOFF ON-SITE AND SHALL BE PROPERLY LOCATED TO COLLECT ALL TRIBUTARY SITE RUNOFF.
9. WHERE RETENTION OF STORM WATER RUNOFF ON-SITE IS NOT FEASIBLE DUE TO SITE CONSTRAINTS, RUNOFF MAY BE CONVEYED TO THE STREET AND THE STORM DRAIN SYSTEM PROVIDED THAT AN APPROVED FILTERING SYSTEM IS INSTALLED AND MAINTAINED ON-SITE DURING THE CONSTRUCTION DURATION.

TYPICAL DEMOLITION DEBRIS NOTES

1. EROSION CONTROL DEVICES SHOWN ON THE PLAN MAY BE REMOVED WHEN APPROVED BY THE BUILDING OFFICIAL IF THE DEMOLITION OPERATION HAS PROGRESSED TO THE POINT WHERE THEY ARE NO LONGER REQUIRED.
2. ALL SILT AND DEBRIS SHALL BE REMOVED FROM ALL DEVICES WITHIN 24 HOURS AFTER EACH RAINSTORM AND BE DISPOSED OF PROPERLY.
3. A GUARD SHALL BE POSTED ON THE SITE WHENEVER THE DEPTH OF WATER IN ANY DEVICE EXCEEDS TWO FEET. THE DEVICE SHALL BE DRAINED OR PUMPED WITHIN 24 HOURS AFTER EACH RAINSTORM. PUMPING AND DRAINING OF ALL BASINS AND DRAINAGE DEVICES MUST COMPLY WITH THE APPROPRIATE BMP FOR DEWATERING OPERATIONS.
4. THE PLACEMENT OF ADDITIONAL DEVICES TO CONTAIN POLLUTANTS WITHIN THE SITE IS LEFT TO THE DISCRETION OF THE FIELD ENGINEER. ADDITIONAL DEVICES AS NEEDED SHALL BE INSTALLED TO RETAIN SEDIMENTS AND OTHER POLLUTANTS ON SITE.
5. STORM WATER POLLUTION DEVICES ARE TO BE MODIFIED, AS NEEDED, AS THE PROJECT PROGRESSES, THE DESIGN AND PLACEMENT OF THESE DEVICES IS THE RESPONSIBILITY OF THE FIELD ENGINEER. PLANS REPRESENTING CHANGES MUST BE SUBMITTED FOR APPROVAL IS REQUESTED BY THE BUILDING OFFICIAL.
6. EVERY EFFORT SHOULD BE MADE TO ELIMINATE THE DISCHARGE OF NON-STORM WATER FROM THE PROJECT SITE AT ALL TIMES.
7. POLLUTANTS MUST BE RETAINED ON-SITE AND MAY NOT BE TRANSPORTED FROM THE SITE VIA PUMPS, SHEET FLOW, SWALES, AREA DRAINS, NATURAL DRAINAGE COURSES, OR WIND.
8. CONTRACTORS ARE RESPONSIBLE TO INSPECT THAT ALL BMPS ARE INSTALLED AND FUNCTIONING PROPERLY IF THERE IS A 40% CHANCE OF 0.25 INCHES OR GREATER OF PREDICTED PRECIPITATION, AND AFTER ACTUAL PRECIPITATION. A CONSTRUCTION SITE INSPECTION CHECKLIST AND INSPECTION LOG SHALL BE MAINTAINED AT THE PROJECT SITE AT ALL TIMES AND AVAILABLE FOR REVIEW BY THE BUILDING OFFICIAL.
9. MATERIALS MAY NOT BE TRACKED FROM THE SITE BY VEHICLE TRAFFIC. THE CONSTRUCTION ENTRANCE ROADWAYS MUST BE STABILIZED SO AS TO INHIBIT SEDIMENTS FROM BEING DEPOSITED INTO THE PUBLIC WAY. ACCIDENTAL DEPOSITIONS MUST BE SWEPT UP IMMEDIATELY AND MAY NOT BE WASHED DOWN BY RAIN OR OTHER MEANS.
10. A STAND-BY CREW FOR EMERGENCY WORK SHALL BE AVAILABLE AT ALL TIMES DURING THE RAINY SEASON (NOVEMBER 1 TO APRIL 15). NECESSARY MATERIALS SHALL BE AVAILABLE ON-SITE AND STOCKPILED AT CONVENIENT LOCATIONS TO FACILITATE RAPID CONSTRUCTION OF EMERBENCY DEVICES WHEN RAIN IS IMMINENT.

SALASO'BRIEN
expect a difference
3700 South Susan Street, Ste 150
Santa Ana, California 92704
949.517.4900 | 408.297.2995 (f)
salasobrien.com
California | Georgia | Louisiana
Montana | Texas | Washington
Licensed in 50 States

BRANDOW & JOHNSTON
STRUCTURAL+CIVIL ENGINEERS (B&J HBK, INC.)
EST. 1945
700 S FLOWER ST #1200, LOS ANGELES, CA 90017
T: (213) 596-4500 WWW.BJSCE.COM
B&J PROJECT #: C21-0024

REGISTERED PROFESSIONAL ENGINEER EDGARD S. MELO No. C80534 CIVIL State of California
FOR BRANDOW & JOHNSTON

SAN BERNARDINO COUNTY

800MHZ UPGRADES - CAJON PASS TOWER

WBSE #10.10.1011
CIP #20-225

ISSUE

MARK	DATE	DESCRIPTION
	12/23/21	95% CD
	12/16/22	100% CD

SOBE PROJECT NO:	2002862
DATE:	12/16/22
DRAWN BY:	CB (CIVIL)
CHECKED BY:	GF (CIVIL)
APPROVED BY:	EM (CIVIL)

SHEET TITLE

EROSION CONTROL PLAN

SCALE: AS NOTED
THIS DRAWING IS 30" X 42" AT FULL SIZE

GR1.2

THIS DRAWING IS 30" X 42" AT FULL SIZE, 15" X 21" AT HALF SIZE. © 2015 BY SALAS O'BRIEN ENGINEERS, INC.

NOT FOR BID

THIS TOPOGRAPHIC SURVEY WAS PERFORMED BY SPIRO LAND SURVEYING, INC. ON MAY 26TH, 2022. HORIZONTAL CONTROL AND VERTICAL DATUM WAS ESTABLISHED PER OPUS SOLUTIONS PT #42 AND SHOULD NOT BE USED MAPPING SERVICES. ELEVATION OF 4332.12', PER NAVD 88' ORTHOMETRIC HEIGHT.

NORTH

TOPOGRAPHIC SURVEY

0' 7.5' 15' 30'

GRAPHIC SCALE : 1" = 15'

SALASO'BRIEN
| expect a difference |
3700 South Susan Street, Ste 150
Santa Ana, California 92704
949.517.4900 | 408.297.2995 (f)
salasobrien.com
California | Georgia | Louisiana
Montana | Texas | Washington
Licensed in 50 States

BRANDOW & JOHNSTON
STRUCTURAL•CIVIL ENGINEERS (B&J HBK, INC.)
700 S FLOWER ST #1200, LOS ANGELES, CA 90017
T: (213) 596-4500
WWW.BJSCE.COM
B&J PROJECT #: C21-0024
EST. 1945

REGISTERED PROFESSIONAL ENGINEER
BRAND S. WEI
No.C80534
State of California
FOR BRANDOW & JOHNSTON

SAN BERNARDINO COUNTY

800MHZ UPGRADES - CAJON PASS TOWER

WBSE #10.10.1011
CIP #20-225

ISSUE

MARK	DATE	DESCRIPTION
	12/23/21	95% CD
	12/16/22	100% CD

SOBE PROJECT NO:	2002862
DATE:	12/16/22
DRAWN BY:	CB (CIVIL)
CHECKED BY:	GF (CIVIL)
APPROVED BY:	EM (CIVIL)

SHEET TITLE

TOPOGRAPHIC SURVEY

SCALE: AS NOTED

THIS DRAWING IS 30" X 42" AT FULL SIZE

C1.0

THIS DRAWING IS 30" X 42" AT FULL SIZE, 15" X 21" AT HALF SIZE. © 2015 BY SALAS O'BRIEN ENGINEERS, INC.

STRUCTURAL GENERAL NOTES

I. DESIGN CRITERIA:

1. APPLICABLE CODES:
   2019 CALIFORNIA BUILDING CODE
2. GRAVITY LOADS
   15 PSF ROOF DEAD LOAD
   20 PSF ROOF LIVE LOAD
   50 PSF GROUND SNOW LOAD
   30.8 PSF DESIGN SNOW LOAD (Pf)
3. SEISMIC LOADS:
   RISK CATEGORY: IV
   SITE CLASS: D
   IMPORTANCE FACTOR I: 1.5
   SITE ACCELERATIONS Ss: 1.694g
   Sms: 1.694g
   Sds: 1.129g
4. WIND LOADS
   125 MPH ULTIMATE WIND SPEED
   EXPOSURE C
5. MONOPOLE BASE REACTIONS (LRFD) – PRELIMINARY
   MOMENT = 500 FT–KIPS
   SHEAR = 15 KIPS
   AXIAL = 4 KIPS
6. GEOTECHNICAL REPORT:
   BSK ASSOCIATES, GEOTECHNICAL ENGINEERING INVESTOGATION, OAK HILLS 800 MHz TOWER PROJECT, CAJON PASS, SAN BERNARDINO COUNTY, CAKIFORNIA, BSK PROJECT G21–216–11B, SEPTEMBER 9, 2021, WITH ADDENDUM REPORT ISSUED JUNE 3, 2022.

   BEARING CAPACITIES: DEAD PLUS LIVE LOAD 3000 PSF
   TOTAL LOAD INCLUDING WIND & SEISMIC 4000 PSF

II. GENERAL:

1. ALL MATERIALS AND WORKMANSHIP SHALL BE OF A QUALITY COMPATIBLE WITH THE REQUIREMENTS OF THE 2019 EDITION OF THE CALIFORNIA BUILDING CODE AND ALL LOCAL CITY AND COUNTY ORDINANCES, WHICHEVER MAY APPLY.
2. ALL WORK SHOWN ON THESE DRAWINGS IS NEW UNLESS NOTED EXISTING (E).
3. THE CONDITIONS SHOWN FOR EXISTING CONSTRUCTION REFLECT INFORMATION SHOWN ON THE ORIGINAL CONSTRUCTION DRAWINGS AND DRAWINGS DESCRIBING SUBSEQUENT BUILDING IMPROVEMENTS. THE CONTRACTOR SHALL REFER TO ALL AVAILABLE DRAWINGS AND FIELD OBSERVATIONS FOR VERIFICATION OF EXISTING CONDITIONS AS REQUIRED.
4. THE CONTRACTOR SHALL VERIFY ALL CONTROLLING FIELD DIMENSIONS AND CONDITIONS BEFORE THE START OF ANY CONSTRUCTION, ORDERING OR FABRICATING ANY MATERIAL. ANY DISCREPANCIES BETWEEN THE CONDITIONS FOUND AND THOSE SHOWN ON THE PLANS SHALL BE BROUGHT TO THE ATTENTION OF THE PROJECT MANAGER FOR CLARIFICATION BEFORE WORK PROCEEDS.
5. ALL OMISSION AND CONFLICTS BETWEEN THE VARIOUS ELEMENTS AND/OR SPECIFICATIONS SHALL BE BROUGHT TO THE ATTENTION OF THE PROJECT MANAGER BEFORE PROCEEDING WITH ANY WORK SO INVOLVED.
6. IT SHALL BE THE CONTRACTORS SOLE RESPONSIBILITY TO DESIGN AND PROVIDE ADEQUATE SHORING, BRACING, FORMWORK, ETC., AS REQUIRED FOR THE PROTECTION OF LIFE AND PROPERTY DURING CONSTRUCTION, AND TO HOLD ALL NEW OR REVISED ELEMENTS IN PLACE UNTIL FINAL SUPPORT CONDITIONS ARE COMPLETED.
7. THE CONTRACTOR SHALL PROTECT ALL PIPES, DUCTS, ARCHITECTURAL FINISHES, AND UTILITIES FROM DAMAGE DURING CONSTRUCTION AND RESTORE ALL DAMAGED ITEMS TO ORIGINAL CONDITION, UNLESS NOTED OTHERWISE.
8. IT SHALL BE THE RESPONSIBILITY OF THE CONTRACTOR TO LOCATE ALL EXISTING UTILITIES WHETHER SHOWN HEREON OR NOT, AND TO PROTECT THEM FROM DAMAGE. THE CONTRACTOR SHALL BEAR ALL EXPENSE OF REPAIR OR REPLACEMENT IN CONJUNCTION WITH THE PROSECUTION OF THIS WORK.
9. THE CONTRACTOR SHALL EXERCISE EXTREME CAUTION WHEN WELDING NEAR WOOD OR OTHER FLAMMABLE MATERIALS.
10. THE CONTRACTOR IS RESPONSIBLE TO FURNISH AND MAINTAIN NECESSARY BARRICADES, COVERINGS OR OTHER PROTECTIVE DEVICES AS NEEDED TO PROTECT EQUIPMENT, ADJACENT SURFACES AND MEET SAFETY REQUIREMENTS. THE CONTRACTOR SHALL REMOVE THESE MATERIALS ONCE THE PROJECT HAS BEEN COMPLETED.
11. WHERE A CONSTRUCTION DETAIL IS NOT SHOWN OR NOTED, THE DETAIL SHALL BE THE SAME AS FOR SIMILAR WORK. THE CONTRACTOR SHALL CONFIRM THE USE OF SIMILAR DETAILS WITH THE STRUCTURAL ENGINEER PRIOR TO COMMENCEMENT OF THE WORK.
12. THE INFORMATION AND DETAILS FOR THE EXISTING STRUCTURE SHOWN ON THE STRUCTURAL DOCUMENTS ARE BASED ON INFORMATION OBTAINED FROM AVAILABLE STRUCTURAL DRAWINGS.
13. THE CONTRACTOR SHALL REVIEW THE EXISTING CONDITIONS PRIOR TO THE START OF WORK AND DURING THE COURSE OF CONSTRUCTION TO DETERMINE THE PRESENCE, IF ANY, OF ASBESTOS OR OTHER HAZARDOUS MATERIALS. IF DISCOVERED, THE CONTRACTOR SHALL PROMPTLY NOTIFY THE OWNER AND TAKE APPROPRIATE PRECAUTIONARY MEASURE TO CONTAIN HAZARDOUS MATERIALS UNTIL THE OWNER CAN DEVELOP AN APPROPRIATE DISPOSITION PLAN.
14. THE STRUCTURAL SYSTEMS HAVE BEEN DESIGNED TO CARRY THE SUPERIMPOSED LIVE LOADS AS PRESCRIBED BY THE CALIFORNIA BUILDING CODE AND IN ACCORDANCE WITH STANDARD ENGINEERING PRACTICES, WITH NO SPECIAL PROVISIONS TO CARRY CONCENTRATED LOADS FROM STORAGE AND HANDLING OF CONSTRUCTION MATERIALS OR FROM OPERATION OF CONSTRUCTION EQUIPMENT.

III. ADDITIONAL SAFETY NOTES:

1. THE CONTRACTOR SHALL BE RESPONSIBLE FOR JOB SITE SAFETY. THE FOLLOWING REQUIREMENTS ARE NOT INTENDED TO BE A COMPLETE LIST, BUT ARE ADDITIONAL SAFETY REQUIREMENTS FOR THE CONTRACTOR. OBSERVATION VISITS TO THE SITE BY THE ENGINEER SHALL NOT BE DEEMED AS INSPECTION.
2. THE STRUCTURE SHOWN IN THESE DRAWINGS IS STRUCTURALLY SOUND ONLY IN ITS COMPLETE FORM. THE DESIGN, ADEQUACY, AND SAFETY OF ERECTION BRACING, SHORING, TEMPORARY SUPPORTS, ETC IS THE SOLE RESPONSIBILITY OF THE CONTRACTOR, AND HAS NOT BEEN CONSIDERED BY THE ENGINEER. THE CONTRACTOR IS RESPONSIBLE FOR THE STABILITY OF THE STRUCTURE AT ALL TIMES DURING CONSTRUCTION.
3. AN ERECTION PLAN IS REQUIRED FOR MOST CONSTRUCTION PHASES. CONTRACTOR SHALL DETERMINE ALL CONSTRUCTION PHASES WHICH REQUIRE ERECTION PLANS ACCORDING TO ALL APPLICABLE SAFETY REGULATIONS. A CERTIFIED COPY OF SUCH ERECTION PLANS SHALL REMAIN ON THE CONSTRUCTION SITE AT ALL TIMES.
4. CONTRACTOR SHALL DETERMINE IF A CAL OSHA PERMIT IS REQUIRED, IF SO, IT SHALL BE THE CONTRACTOR'S RESPONSIBILITY TO OBTAIN SUCH PERMIT.
5. ALL TEMPORARY FLOOR AND ROOF OPENINGS LACKING GUARDRAILS SHALL BE ADEQUATELY COVERED AND DESIGNED TO RESIST CONSTRUCTION TRAFFIC LOADS.

IV. SPECIAL INSPECTION:

1. SPECIAL INSPECTIONS AND OBSERVATION SHALL BE PERFORMED IN ACCORDANCE WITH SECTION 1704 AND 1705 OF THE CBC 2019, AND IS REQUIRED FOR THE FOLLOWING UNLESS SPECIFICALLY NOTED OTHERWISE:
   A. CONCRETE REINFORCING STEEL PLACEMENT
   B. PLACEMENT OF CONCRETE & GROUT
   C. CONCRETE & GROUT COMPRESSION TESTS
   D. INSTALLATION OF EMBEDDED ANCHOR BOLTS, EXPANSION ANCHORS AND EPOXY ANCHORS.
   E. SUBGRADE PREPARATION AND COMPACTION
   F. MASONRY WALL CONSTRUCTION PER CBC–2019 SECTION 1705.4, TMS 402/ACI 530/ASCE 5, AND TMS 602/ACI 530.1/ASCE 6.
2. ALL WELDERS SHALL BEAR CURRENT QUALIFICATION CERTIFICATES FOR THE MATERIAL, WELDING POSITIONS, AND WELDING PROCESSES EMPLOYED IN THE WORK. CERTIFICATES FOR EACH WELDER SHALL BE CHECKED BY THE WELDING INSPECTOR PRIOR TO WELDING.
3. WELDING INSPECTORS SHALL BE QUALIFIED FOR THE METHODS EMPLOYED IN THE WORK AS PER ASNT AND AWS D1.1 REQUIREMENTS.
4. THE SPECIAL INSPECTOR SHALL BRING ALL DISCREPANCIES IMMEDIATELY TO THE ATTENTION OF THE CONTRACTOR FOR CORRECTION. IF NOT CORRECTED TO THE SATISFACTION OF THE INSPECTOR, THE DISCREPANCIES SHALL BE BROUGHT IMMEDIATELY TO THE ATTENTION OF THE DISTRICT AND STRUCTURAL ENGINEER.
5. THE SPECIAL INSPECTOR SHALL FURNISH TIMELY INSPECTION REPORTS TO THE DISTRCT AND THE STRUCTURAL ENGINEER FOR REVIEW AND ACCEPTANCE. THE INSPECTOR SHALL ALSO SUBMIT A FINAL REPORT, SIGNED BY HIMSELF AND BEARING THE SEAL AND SIGNATURE OF A CIVIL ENGINEER REGISTERED IN CALIFORNIA, STATING WHETHER THE WORK REQUIRING INSPECTION WAS IN CONFORMANCE WITH THE APPROVED PLANS AND SPECIFICATIONS AND THE APPLICABLE WORKMANSHIP PROVISIONS OF THE CBC.
6. THE CONTRACTOR SHALL BE RESPONSIBLE FOR REMOVING AND REPLACING ALL WORK WHICH IS DETERMINED BY TESTING AND INSPECTION NOT TO COMPLY WITH SPECIFIED STANDARDS.

V. SUBMITTALS:

1. PRIOR TO PROCEEDING WITH THE WORK, THE CONTRACTOR SHALL SUBMIT THE FOLLOWING TO THE STRUCTURAL ENGINEER FOR REVIEW:
   A. CONCRETE MIX DESIGN
   B. STRUCTURAL STEEL SHOP DRAWINGS
   C. MONOPOLE SHOP DRAWINGS AND DESIGN CALCULATIONS
   D. MASONRY PRODUCT DATA
2. REVIEW OF SUBMITTALS BY THE STRUCTURAL ENGINEER IS ONLY FOR GENERAL CONFORMANCE WITH DESIGN INTENT. REVIEW OF THE DRAWINGS DOES NOT RELIEVE THE CONTRACTOR OF RESPONSIBILITY FOR COMPLETING THE WORK IN ACCORDANCE WITH THE DRAWINGS AND SPECIFICATIONS.
3. INDICATE PROFILES, SIZES, SPACING, AND LOCATIONS OF STRUCTURAL MEMBERS, CONNECTIONS, ATTACHMENTS, FASTENERS, CAMBERS, HOLES AS PER CONSTRUCTION DRAWINGS.
4. SHOP DRAWINGS SHALL SHOW CONNECTIONS AS INDICATED ON CONSTRUCTION DRAWINGS. WHERE ALTERNATIVE CONNECTIONS ARE SUBSTITUTED FOR THOSE INDICATED ON THE CONSTRUCTION DRAWINGS, SUBMIT DATA (CALCULATIONS OR TEST) DEMONSTRATING THAT THEY ARE OF EQUIVALENT OR SUPERIOR STRENGTH, STIFFNESS AND DUCTILITY TO THOSE SHOWN ON THE CONSTRUCTION DRAWINGS FOR STRUCTURAL ENGINEER'S APPROVAL. CLEARLY INDICATE ALL ALTERNATIVELY DETAILED CONNECTIONS ON SHOP DRAWINGS.
5. INDICATE WELDED CONNECTIONS USING STANDARD AWS WELDING SYMBOLS. INDICATE WELD SIZES, EFFECTIVE SIZES AND NET LENGTHS.
6. SUBMIT THE FOLLOWING TO THE STRUCTURAL ENGINEER FOR RECORD PURPOSES:
   A. MILL CERTIFICATES AND TEST REPORTS FOR ALL REINFORCING STEEL
   B. MILL CERTIFICATES AND TEST REPORTS FOR ALL STRUCTURAL STEEL

VI. CONCRETE & REINFORCING:

1. ALL CONCRETE CONSTRUCTION SHALL CONFORM TO ACI 318–14, "BUILDING CODE REQUIREMENTS FOR STRUCTURAL CONCRETE".
2. REINFORCING BARS AND DOWELS SHALL BE DEFORMED BARS AND SHALL CONFORM TO ASTM SPECIFICATION A615 OR A706, GRADE 60.
3. MINIMUM CLEAR DISTANCES BETWEEN REINFORCING STEEL AND FACE OF CONCRETE ARE AS FOLLOWS:
   A. CONCRETE CAST AGAINST & PERMANENTLY EXPOSED TO EARTH OR WEATHER:
      ALL BAR SIZES 3"
   B. CONCRETE EXPOSED TO EARTH OR WEATHER:
      #6 BAR AND LARGER 2"
      #5 BAR AND SMALLER 1–1/2"
   C. CONCRETE NOT EXPOSED TO WEATHER OR IN CONTACT WITH THE GROUND:
      #14 BAR AND LARGER 1–1/2"
      #11 BAR AND SMALLER 3/4"
4. WHERE NEW CONCRETE IS PLACED AGAINST EXISTING CONCRETE, THE EXISTING SURFACE SHALL BE SOUND, CLEAN, FREE OF PAINT AND LAITANCE, AND ROUGHENED TO EXPOSE AGGREGATE. A BONDING AGENT ("WELDCRETE" BY LARSEN PRODUCTS, OR APPROVED EQUAL) SHALL BE APPLIED TO EXISTING CONCRETE SURFACES PRIOR TO PLACING NEW CONCRETE AGAINST EXISTING CONCRETE.
5. CONCRETE MIXES SHALL BE DESIGNED BY AND BEAR THE SEAL OF A PROFESSIONAL CIVIL ENGINEER REGISTERED IN THE STATE OF CALIFORNIA.
6. CONCRETE SHALL BE NORMAL WEIGHT AGGREGATE CONCRETE & SHALL HAVE A MINIMUM TWENTY–EIGHT DAY COMPRESSIVE STRENGTH (f'c) OF 4,000 PSI UNLESS OTHERWISE NOTED.
7. CEMENT SHALL CONFORM TO ASTM C–150, TYPE I.
8. AGGREGATES SHALL BE HARD ROCK AND SHALL CONFORM TO ASTM C–33.
9. READY–MIX CONCRETE SHALL BE MIXED AND DELIVERED IN ACCORDANCE WITH ASTM C–94.
10. PROJECTING CORNERS SHALL BE FORMED WITH A 3/4–INCH CHAMFER, UNLESS OTHERWISE NOTED.
11. ALL PIPES AND DUCTS THROUGH CONCRETE SHALL BE SLEEVED. VERIFY OPENINGS WITH PLUMBER AND ELECTRICIAN.

VII. ANCHORS & DOWELS:

1. INSTALL ALL CONCRETE ANCHORS IN ACCORDANCE WITH THE REQUIREMENTS GIVEN IN THE COLA RESEARCH COMMITTEE RECOMMENDATIONS FOR THE ANCHOR. ALL INSTALLED ANCHORS SHALL HAVE SPECIAL INSPECTION.
2. CONCRETE EXPANSION ANCHORS SHALL BE HILTI KWIK BOLT TZ2 STAINLESS STEEL WEDGE ANCHORS OR EQUAL. INSTALL PER ICC ESR–4266. SPECIAL INSPECTION IS REQUIRED.
3. EPOXY ANCHORS AND DOWELS SHALL BE HILTI HIT–RE 500 V3 OR EQUAL. INSTALL PER ICC ESR–3814. SPECIAL INSPECTION IS REQUIRED.
4. SUBSTITUTIONS SHALL BE SUBMITTED TO THE OWNER'S REPRESENTATIVE FOR APPROVAL PRIOR TO INSTALLATION.
5. WHEN INSTALLING DRILLED–IN ANCHORS IN EXISTING CONCRETE MEMBERS, USE CARE AND CAUTION TO AVOID CUTTING OR DAMAGING THE EXISTING REINFORCING BARS. MAINTAIN A MINIMUM CLEARANCE OF ONE INCH BETWEEN THE REINFORCEMENT AND THE DRILLED–IN ANCHOR.
6. INSTALLATION OF DRILLED IN EXPANSION–TYPE AND EPOXY ANCHORS SHALL BE CONTINUOUSLY INSPECTED BY THE OWNER'S REPRESENTATIVE. 25 PERCENT OF ALL EXPANSION–TYPE ANCHORS (ALTERNATE BOLTS IN ANY GROUP) AND 10 PERCENT EPOXY ANCHORS SHALL BE TESTED BY THE OWNER'S TESTING LABORATORY FOR THE PULLOUT LOADS OR TORQUE AS INDICATED IN THE TABLES BELOW. IF ANY ANCHOR FAILS, IT SHALL BE REPLACED AND THE IMMEDIATELY ADJACENT BOLTS SHALL ALSO BE TESTED AT CONTRACTOR'S EXPENSE. TESTING SHALL BE PER FOLLOWING SCHEDULES.

WEDGE ANCHOR EXPANSION BOLTS – HILTI KWIK BOLT TZ2

ANCHOR DIAMETER (IN)	MINIMUM EMBEDMENT (IN)	TORQUE TEST PER MANUFACTURER RECOMMENDATIONS (FT–LBS)	
		CARBON STEEL	STAINLESS STEEL
3/8	2 1/2	30	30
1/2	3	50	40
5/8	3 3/4	40	60
3/4	4 1/2	110	125

EPOXIED DOWELS

REBAR SIZE (GRADE 60)	MINIMUM EMBEDMENT (IN)	TEST LOAD IN NORMAL WEIGHT CONCRETE (LBS)	
		2,500 PSI CONCRETE	4,000 PSI CONCRETE
No. 3	3.5	2900	3260
No. 4	4	4430	6300
No. 5	5	5820	8340
No. 6	7	9210	11400
No. 7	7.5	11360	13700
No. 8	8	15190	18100

EPOXIED THREADED ROD (ASTM A36) OR SS (AISI 304/316)

ROD SIZE (IN)	MINIMUM EMBEDMENT (IN)	TEST LOAD IN NORMAL WEIGHT CONCRETE (LBS)	
		2,500 PSI CONCRETE	4,000 PSI CONCRETE
3/8	3	2620	3400
1/2	4	4240	5500
5/8	5	6900	7900
3/4	6	7700	11900
7/8	7	11900	15100
1	8	13250	16800
1 1/4	12	24400	31100

VIII. MASONRY

1. MASONRY CONSTRUCTION SHALL COMPLY WITH THE REQUIREMENTS OF ACI 530.1–11/ASCE 6–11/TMS 602–11 "SPECIFICATION FOR MASONRY STRUCTURES".
2. CONCRETE BLOCK, TYPE 1. GRADE N–1. ALL WALLS TO BE SOLID GROUTED.
3. ALL UNITS SHALL HAVE A MINIMUM COMPRESSIVE STRENGTH fm' OF 2000 PSI.
4. MORTAR USED SHALL BE TYPE S WITH A MINIMUM COMPRESSIVE STRENGTH OF 2000 PSI AT 28 DAYS. MIX ONE PART PORTLAND CEMENT, ONE HALF PART LIME PUTTY, FOUR AND ONE–HALF PARTS SAND.
5. GROUT USE SHALL CONFORM TO A.S.T.M. DESIGNATION C476–71 WITH A MINIMUM COMPRESSIVE STRENGTH OF 2500 PSI AT 28 DAYS. USE ONE PART CEMENT, THREE PARTS SAND AND TWO PARTS PEA GRAVEL TO BE OF FLUID CONSISTENCY.
6. PROVIDE CLEAN–OUTS IN THE BOTTOM COURSE OF MASONRY FOR EACH GROUT POUR WHEN THE GROUT POUR EXCEEDS 5'–4" PER ACI 530.1–11/ASCE6–11/TMS 602–11 "SPECIFICATION FOR MASONRY STRUCTURES"
7. THE GROUT LIFT HEIGHT SHALL NOT EXCEED 12.67 FEET WHEN THE MASONRY HAS CURED FOR 4 HOURS, THE GROUT SLUMP IS MAINTAINED BETWEEN 10 AND 11 INCHES, AND NO INTERMEDIATE REINFORCED BOND BEAMS ARE PLACED BETWEEN THE TOP AND BOTTOM OF THE POUR HEIGHT. OTHERWISE THE GROUT LIFT HEIGHT SHALL NOT EXCEED 5'–4"
8. THE THICKNESS OF GROUT BETWEEN BLOCK UNITS AND REINFORCING STEEL SHALL BE NOT LESS THAN ½" AND NOT LESS THAN ¾" BETWEEN PARALLEL REINFORCING BARS.
9. IF WORK IS STOPPED FOR ONE HOUR OR LONGER, PROVIDE HORIZONTAL CONSTRUCTION JOINTS BY STOPPING THE GROUT 1 ½" BELOW THE TOP OF BLOCK.
10. REINFORCING BARS AND DOWELS SHALL BE DEFORMED BARS AND SHALL CONFORM TO ASTM SPECIFICATION A615 OR A706, GRADE 60.
11. REINFORCING STEEL TO LAP WHERE SPLICED 50 DIAMETERS.
12. REINFORCEMENT SHALL BE SUPPORTED TO PREVENT DISPLACEMENTS BEYOND TOLERANCES ALLOWED BY 3.4 OF ACI 530.1 PRIOR TO GROUTING.
13. CONTINUOUS SPECIAL INSPECTION IS REQUIRED U.N.O.

IX. STRUCTURAL STEEL:

1. ALL STRUCTURAL STEEL WORK SHALL CONFORM TO THE AMERICAN INSTITUTE OF STEEL CONSTRUCTION (AISC) PUBLICATION "SPECIFICATION FOR THE DESIGN, FABRICATION, AND ERECTION OF STRUCTURAL STEEL BUILDINGS".
2. AT CONTRACTORS OPTION, SHEAR TABS FOR STEEL BEAMS MAY BE FIELD WELDED TO BEAM WEBS TO FACILITATE ERECTION.
3. COMPLETE WELDING PROCEDURE SHALL BE SUBMITTED TO AND APPROVED BY THE STRUCTURAL ENGINEER OF RECORD AND THE BUILDING DEPARTMENT BEFORE ANY WELDING IS COMMENCED.
4. STRUCTURAL STEEL SHALL BE AS FOLLOWS:

BEAMS AND COLUMNS	ASTM A572 GRADE 50 OR ASTM A992
GUSSET PLATE	ASTM A36
ANGLES	ASTM A36
CHANNELS	ASTM A36
TUBE STEEL	ASTM A500 (GRADE B)
CONTINUITY PLATES	ASTM A572 (GRADE 50)
BASE PLATES (LESS THAN 4" THK.)	ASTM A572 (GRADE 50)
BASE PLATES (GREATER THAN 4" THK.)	ASTM A572 (GRADE 42)
MISC. PLATES	ASTM A36
PIPE COLUMNS	ASTM A53 TYP 'E' OR TYPE 'S' (GRADE B)
STIFFENER/SHEAR PLATES	ASTM A36

5. FABRICATE STRUCTURAL STEEL MEMBERS IN ACCORDANCE WITH AISC SPECIFICATION FOR STRUCTURAL STEEL BUILDINGS AND AISC CODE OF STANDARD PRACTICE.
6. FABRICATE STRUCTURAL ELEMENTS IN THE LARGEST SECTIONS PRACTICAL, CONSIDERING TRANSPORT AND ERECTION REQUIREMENTS.
7. ALL WELDING SHALL BE PERFORMED UNDER A PRE–QUALIFIED OR QUALIFIED BY TEST WELDING PROCEDURE, PER AWS D1.1. SUBMIT WRITTEN WELDING PROCEDURES FOR EACH CLASS OF WELD (POSITION, PROCESS, MATERIAL TYPE, FILLER METAL TYPE, JOINT PREPARATION, PRE–HEAT, POST–HEAT AND THICKNESS) FOR BOTH PRE–QUALIFIED AND QUALIFIED BY TEST PROCEDURES AS PER AWS D1.1. FOR QUALIFIED BY TEST PROCEDURES, SUBMIT TEST DATA AS PER AWS D1.1.
8. ALL WELDING SHALL BE DONE BY THE SHIELDED ARC PROCESS USING APPROVED ELECTRODES PER AWS SPECIFICATION E70XX (LOW HYDROGEN ELECTRODES). WELDING SHALL CONFORM TO THE LATEST EDITION OF AWS D1.1 AND SHALL BE PERFORMED BY CERTIFIED WELDERS QUALIFIED UNDER THE PROCEDURES CONTAINED THEREIN.
9. ALL BOLT HOLES IN STEEL SHALL BE 1/16" LARGER THAN THE NOMINAL BOLT DIAMETER UNLESS OTHERWISE NOTED.
10. SHOP PRIME PAINT ANY STRUCTURAL STEEL WHICH WILL NOT BE PERMANENTLY EXPOSED TO WEATHER WITH ONE COAT OF PRIMER (SSPC PS 2.03, TNEMEC SERIES V10 OR APPROVED EQUAL). INCLUDE ALL PARTS OF BRACES, BRACKETS, AND SIMILAR ITEMS. DO NOT SHOP PRIME SURFACES TO BE GALVANIZED, MACHINED SURFACES, CONTACT SURFACES, AND EDGES AND SURFACE AREAS ADJACENT TO FIELD WELDS. APPLY TWO COATS TO PARTS INACCESSIBLE AFTER ASSEMBLY OR ERECTION.
11. ALL STRUCTURAL STEEL SHAPES EXPOSED TO WEATHER SHALL RECEIVE A GALVANIZED ZINC COATING OF 2.3 OUNCES PER SQUARE FOOT IN ACCORDANCE WITH ASTM A123 AFTER SHOP FABRICATION. ALL HARDWARE FOR SUCH STEEL SHALL BE GALVANIZED IN ACCORDANCE WITH ASTM A153.
12. REPAIR DAMAGED GALVANIZED SURFACES WITH GALVANIZING REPAIR METHOD AND PAINT CONFORMING TO ASTM A780 OR BY THE APPLICATION OF STICK OR THICK PASTE MATERIAL SPECIFICALLY DESIGNED FOR REPAIR OF GALVANIZING, AS APPROVED BY THE STRUCTURAL ENGINEER. CLEAN AREAS TO BE REPAIRED AND REMOVE THE SLAG FROM THE WELDS. HEAT SURFACES TO WHICH STICK OR PASTE MATERIAL IS APPLIED, WITH A TORCH TO A TEMPERATURE SUFFICIENT TO MELT THE METALLICS IN STICK OR PASTE; SPREAD THE MOLTEN MATERIAL UNIFORMLY OVER SURFACES TO BE COATED AND WIPE THE EXCESS MATERIAL OFF.

ERECTION OF STEEL:

1. ERECT STRUCTURAL STEEL IN ACCORDANCE WITH AISC SPECIFICATION FOR STRUCTURAL STEEL BUILDINGS, AISC CODE OF STANDARD PRACTICE AND AISC SPECIFICATION FOR HIGH STRENGTH BOLTED CONNECTIONS.
2. MAKE PROVISION FOR ERECTION LOADS, AND FOR SUFFICIENT TEMPORARY BRACING TO MAINTAIN STRUCTURE SAFE, PLUMB, AND IN TRUE ALIGNMENT UNTIL COMPLETION OF ERECTION AND INSTALLATION OF PERMANENT BRACING.
3. DO NOT FIELD CUT OR ALTER STRUCTURAL MEMBERS WITHOUT APPROVAL OF STRUCTURAL ENGINEER UNLESS SPECIFICALLY NOTED ON CONSTRUCTION DRAWINGS OR APPROVED SHOP DRAWINGS.
4. AFTER ERECTION, INSPECTION AND TESTING OF STEEL (EXCEPT GALVANIZED STEEL, OR STEEL TO BE IN CONTACT WITH OR EMBEDDED IN CONCRETE), PRIME WELDS, ABRASIONS, AND SURFACES NOT SHOP PRIMED, OR DAMAGED. USE A PRIMER COMPATIBLE WITH SHOP COAT.
5. AFTER ERECTION, INSPECTION AND TESTING OF GALVANIZED STEEL, REPAIR DAMAGED GALVANIZED COATING AND GALVANIZE WELDS.

ERECTION TOLERANCES:

1. MAXIMUM VARIATION FROM PLUMB: 1/8 INCH PER TEN FEET.
2. MAXIMUM OFFSET FROM TRUE ALIGNMENT: 1/4 INCH.

X. METAL DECK:

1. METAL DECK SHALL BE FORMED STEEL DECK AS MANUFACTURED BY VERCO INCORPORATED OR APPROVED EQUAL. DECK SHALL BE FABRICATED FROM GALVANIZED STEEL CONFORMING TO ASTM A653, "STEEL SHEET, ZINC–COATED (GALVANIZED) OR ZINC–IRON ALLOY–COATED (GALVANNEALED) BY THE HOT–DIP PROCESS", STRUCTURAL QUALITY. COATING SHALL CONFORM TO CLASSIFICATION G60.
2. ALL OPENINGS REQUIRED IN THE DECK WHICH ARE NOT SHOWN ON THE STRUCTURAL DRAWINGS SHALL BE CUT IN THE FIELD ONLY AS APPROVED BY THE ENGINEER.

NOT FOR BID

ABBREVIATIONS

AB	ANCHOR BOLT
AFF	ABOVE FINISHED FLOOR
ADD'L	ADDITIONAL
AGG	AGGREGATE
ALT	ALTERNATE
ARCH	ARCHITECT OR ARCHITECTURAL
BFF	BELOW FINISHED FLOOR
BDRM	BEDROOM
BLK	BLOCK
BLKG	BLOCKING
BM	BEAM
BOT	BOTTOM
BTWN	BETWEEN
~C	CENTERLINE
CJ	CEILING JOISTS
CMU	CONCRETE MASONRY UNIT(S)
CALCS	CALCULATIONS
CLG	CEILING
CLR	CLEAR OR CLEARANCE
COL	COLUMN
CONC	CONCRETE
CONT	CONTINUATION OR CONTINUOUS
CONTR	CONTRACTOR
COR	CORNER
DF	DOUGLAS FIR
DL	DEAD LOAD
DS	DOWNSPOUT
DBL	DOUBLE
DET	DETAIL
DIA OR ø	DIAMETER
DIM	DIMENSION
DN	DOWN
(E)	EXISTING
EJ	EXPANSION JOINT
ELEV	ELEVATION
EN	EDGE NAIL
EA	EACH
ES	EACH SIDE
EQ	EQUAL
EW	EACH WAY
EXT	EXTERIOR
(F)	FUTURE
FJ	FLOOR JOIST
FLR	FLOOR
FS	FAR SIDE
FOUND OR FND	FOUNDATION
FP	FIREPLACE
FT	FLOOR TRUSS
FTG	FOOTING
GSM	GALVANIZED SHEET METAL
GA	GAUGE
GALV	GALVANIZED
GLU–LAM, GLB	GLUE LAMINATED BEAM
GYP BD	GYPSUM BOARD
HD	HOLDDOWN
HORIZ	HORIZONTAL
HDR	HEADER
HGR	HANGER
INFO	INFORMATION
INSUL	INSULATION OR INSULATED
INT	INTERIOR
INTER	INTERSECTION
JT	JOINT
LB OR #	POUND OR NUMBER
LL	LIVE LOAD
LNG	LONG OR LENGTH
LSL	TIMBER STRAND
LTWT OR LW	LIGHTWEIGHT
LVL	LAMINATED VENEER LUMBER
MAX	MAXIMUM
MB	MACHINE BOLT
MEP	MECHANICAL, ELECTRICAL AND PLUMBING
MFR OR MANU	MANUFACTURER
MIN	MINIMUM
ML	MICROLLAM
MSTR	MASTER
(N)	NEW
NIC	NOT IN CONTRACT
NTS	NOT TO SCALE
O/	OVER
OC	ON CENTER
OPT	OPTIONAL
~P OR PL	PLATE
PSF	POUNDS PER SQUARE FOOT
PSL	PARALLAM
PT	PRESSURE TREATED
PAR	PARALLEL
PERF	PERFORATED
PERP	PERPENDICULAR
PLHT	PLATE HEIGHT
PLYWD OR PLY	PLYWOOD
PR	PAIR
RCP	REINFORCED CONCRETE PIPE
RECOM OR REC	RECOMMENDATIONS
REINF	REINFORCING
REQ'D	REQUIRED
REBAR	REINFORCING BAR(S)
RJ	ROOF JOIST
RM	ROOM
RR	ROOF RAFTER
RT	ROOF TRUSS
RWD	REDWOOD
SAD	SEE ARCHITECTURAL DRAWINGS
SCD	SEE CIVIL DRAWINGS
SED	SEE ELECTRICAL DRAWINGS
SMD	SEE MECHANICAL DRAWINGS
SCHD	SCHEDULE
SOG	SLAB ON GRADE
SW	SHEARWALL
TEMP	TEMPORARY
TOC	TOP OF CONCRETE
TOW	TOP OF WALL
T/P	TOP PLATE
TYP	TYPICAL
UON	UNLESS OTHERWISE NOTED
VERT	VERTICAL
W/	WITH
WWM	WELDED WIRE MESH
WD	WOOD
WINDOW	WNDW

STRUCTURAL DRAWING INDEX

S–0.1 GENERAL NOTES & ABBREVIATIONS
S–1.1 BUILDING & TOWER FOUNDATION & ROOF FRAMING PLAN
S–5.1 DETAILS
S–5.2 DETAILS
S–5.3 MONOPOLE REQUIREMENTS & FOUNDATION DETAILS

SALAS O'BRIEN
expect a difference
3700 South Susan Street, Ste 150
Santa Ana, California 92704
949.517.4900 | 408.297.2995 (f)
salasobrien.com
California | Georgia | Louisiana
Montana | Texas | Washington
Licensed in 50 States

CPS COMPLETE PROJECT SOLUTIONS
3527 MT. DIABLO BOULEVARD #137, LAFAYETTE, CA 94549
(925) 265–2229 WWW.CPS–GLOBAL.COM

REGISTERED PROFESSIONAL ENGINEER THOMAS C. EBERT S 3931 Exp: Dec 31, 2023 STRUCTURAL STATE OF CALIFORNIA
CPS Project No.: A1305

SAN BERNARDINO COUNTY

800MHZ UPGRADES - CAJON PASS TOWER

WBSE #10.10.1011
CIP #20-225

ISSUE

MARK	DATE	DESCRIPTION
	12/23/21	95% CD
	12/16/22	100% CD

SOBE PROJECT NO:	2002862
DATE:	12/16/22
DRAWN BY:	TD
CHECKED BY:	TE
APPROVED BY:	TE

SHEET TITLE
GENERAL NOTES & ABBREVIATIONS
SCALE: AS NOTED
THIS DRAWING IS 30" X 42" AT FULL SIZE

S–0.1

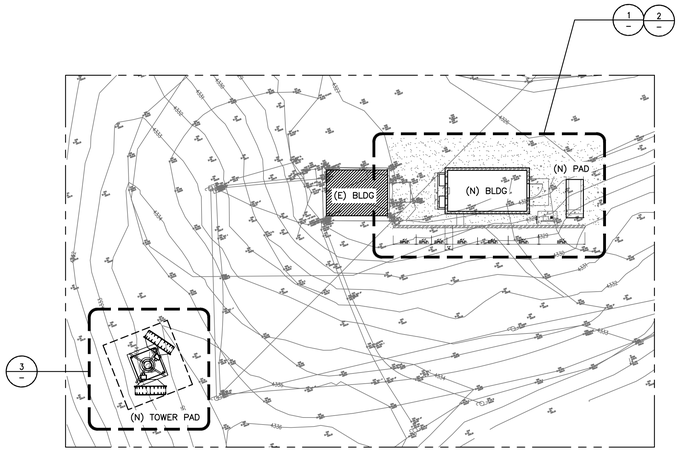

KEY PLAN
SCALE: 1/32" = 1' - 0"

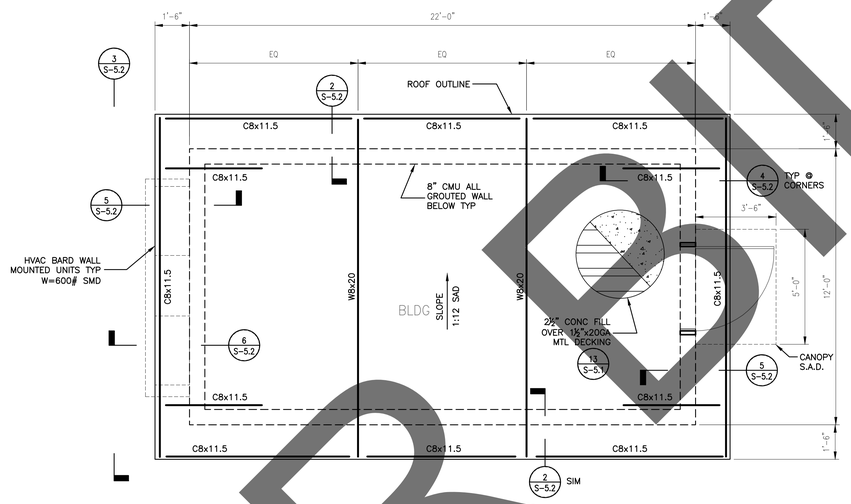

2 BUILDING ROOF FRAMING PLAN
SCALE: 3/8" = 1' - 0"

NOTES

1. FOR GENERAL NOTES, SEE DRAWING S-0.1.
2. TOWER ANCHORAGE AND FOUNDATION DESIGN SHOWN SHALL BE CONFIRMED BY THE STRUCTURAL ENGINEER FOLLOWING RECEIPT OF THE FINAL TOWER DESIGN DOCUMENTS AND BASE REACTIONS PROVIDED BY THE TOWER MANUFACTURER AND PRIOR TO FABRICATION AND CONSTRUCTION. SOME MODIFICATIONS MAY BE NECESSARY.
3. FOR SITE SOILS CONDITIONS AND EXCAVATION REQUIREMENTS, SEE GEOTECHNICAL REPORT REFERENCED ON DRAWING S-0.1. THESE REQUIREMENTS INCLUDE THE FOLLOWING:

3.1. AREAS OF PROPOSED IMPROVEMENTS MUST BE CLEARED OF SURFACE VEGETATION AND DEBRIS. ALL UNDOCUMENTED FILLS SHOULD BE REMOVED WHERE ENCOUNTERED AND WHERE FILLS OR STRUCTURAL IMPROVEMENTS WILL BE PLACED.

3.2. AT THE PROPOSED STRUCTURES, OVEREXCAVATE TO 2-FEET BELOW GRADE OR TO THE BOTTOM OF THE FOOTING ELEVATION, WHICHEVER IS GREATER. DUE TO SHALLOW DENSE GRAVELS AND COBBLES, DIFFICULT RIPPING, TRENCHING AND/OR EXCAVATION SHOULD BE ANTICIPATED. OVEREXCAVATION SHOULD EXTEND LATERALLY 3-FEET BEYOND THE EDGE OF FOUNDATIONS. YIELDING AREAS SHOULD BE OBSERVED BY THE GEOTECHNICAL ENGINEER AND REMOVED AND RECOMPACTED IF NECESSARY.

3.3. AFTER OVEREXCAVATION, THE BOTTOM OF THE EXPOSED SOIL SHOULD BE SCARIFIED 8-INCHES, MOISTURIZED TO OPTIMUM MOISTURE CONTENT, AND COMPACTED TO 90-PERCENT OF ASTM D-1557.

3.4. FOLLOWING THE REQUIRED STRIPPING AND OVEREXCAVATION, THE EXPOSED GROUND SURFACE MUST BE INSPECTED BY THE GEOTECHNICAL ENGINEER TO EVALUATE IF LOOSE OR SOFT ZONES ARE PRESENT THAT WILL REQUIRE OVEREXCAVATION.

3.5. IMPORTED SOIL OR NATIVE EXCAVATED SOILS, FREE OF ORGANIC MATERIALS OR DELETERIOUS SUBSTANCES, MAY BE PLACED AS COMPACTED ENGINEERED FILL. THE MATERIAL MUST BE FREE OF OVERSIZED FRAGMENTS GREATER THAN 3-INCHES IN GREATEST DIMENSION. ENGINEERED FILL MUST BE PLACED IN UNIFORM LAYERS NOT EXCEEDING 8-INCHES IN LOOSE THICKNESS, MOISTURE CONDITIONED TO WITHIN 2- TO 4-PERCENT ABOVE OPTIMUM MOISTURE CONTENT AND COMPACTED TO AT LEAST 90-PERCENT RELATIVE COMPACTION.

LEGEND

DENOTES (E) STRUCTURE
DENOTES (N) STRUCTURE

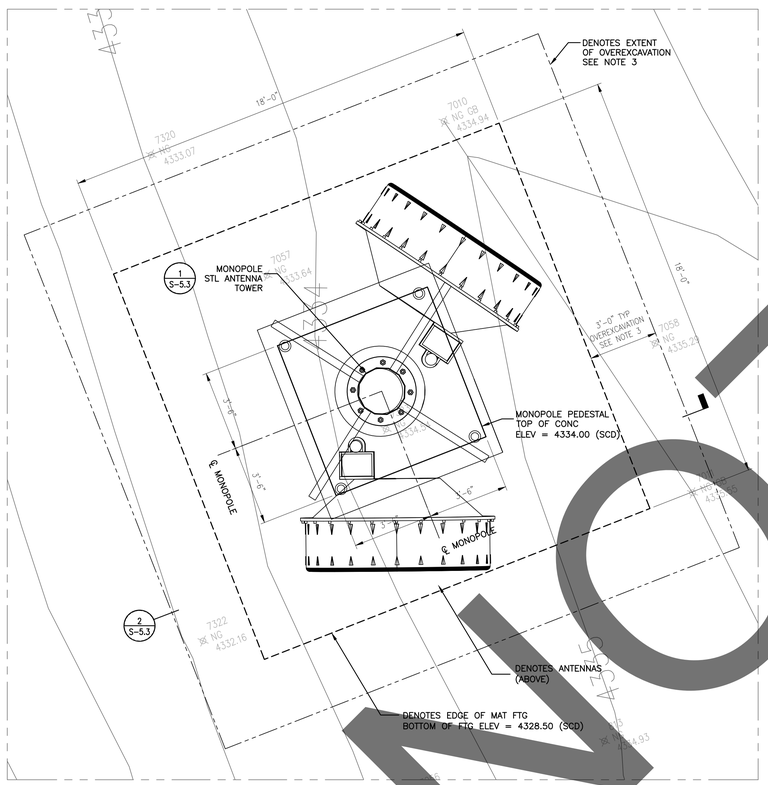

3 TOWER FOUNDATION PLAN
SCALE: 3/8" = 1' - 0"

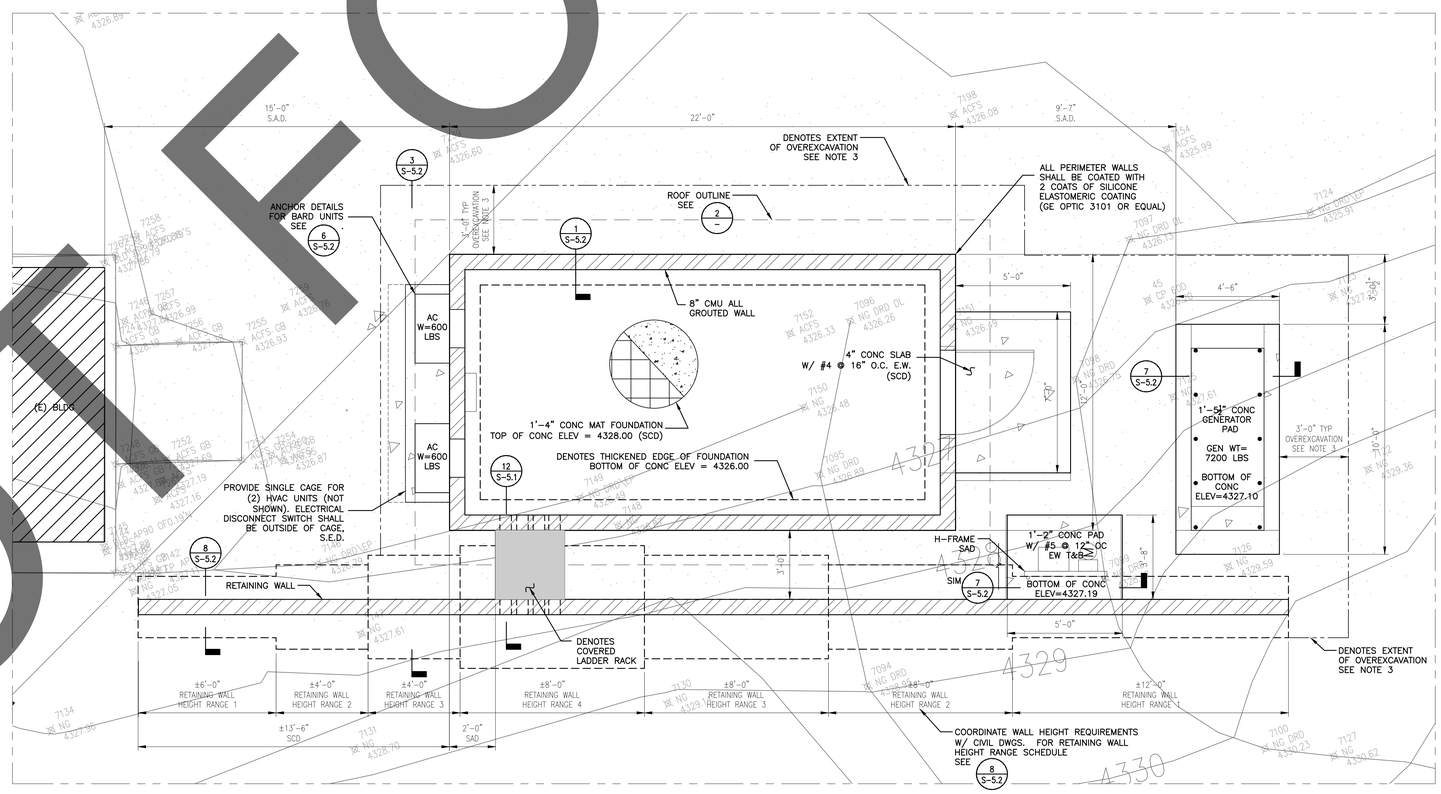

1 BUILDING FOUNDATION PLAN
SCALE: 3/8" = 1' - 0"

SALASO'BRIEN
expect a difference
3700 South Susan Street, Ste 150
Santa Ana, California 92704
949.517.4900 | 408.297.2995 (f)
salasobrien.com
California | Georgia | Louisiana
Montana | Texas | Washington
Licensed in 50 States

CPS
COMPLIANCE PROJECT SOLUCIONS
3527 MT. DIABLO BOULEVARD #137, LAFAYETTE, CA 94549
(925) 285-2229 WWW.CPS-GLOBAL.COM

REGISTERED PROFESSIONAL ENGINEER THOMAS C. GUTIERREZ No. S 5931 Exp. Dec 31, 2023 STRUCTURAL STATE OF CALIFORNIA

CPS Project No.: A1305

SAN BERNARDINO COUNTY

800MHZ UPGRADES - CAJON PASS TOWER

WBSE #10.10.1011
CIP #20-225

ISSUE		
MARK	DATE	DESCRIPTION
	12/23/21	95% CD
	12/16/22	100% CD

SOBE PROJECT NO:	2002862
DATE:	12/16/22
DRAWN BY:	TD
CHECKED BY:	TE
APPROVED BY:	TE

SHEET TITLE

BUILDING & TOWER FOUNDATION & ROOF FRAMING PLAN

SCALE: AS NOTED
THIS DRAWING IS 30" X 42" AT FULL SIZE

S-1.1

NOT FOR BID

THIS DRAWING IS 30" X 42" AT FULL SIZE, 15" X 21" AT HALF SIZE. © 2015 BY SALAS O'BRIEN ENGINEERS, INC.

THIS DRAWING IS 30" X 42" AT FULL SIZE. 15" X 21" AT HALF SIZE. © 2015 BY SALAS O'BRIEN ENGINEERS, INC.

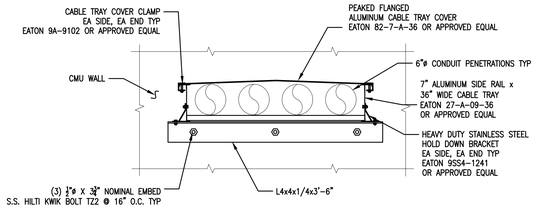

SECTION A-A

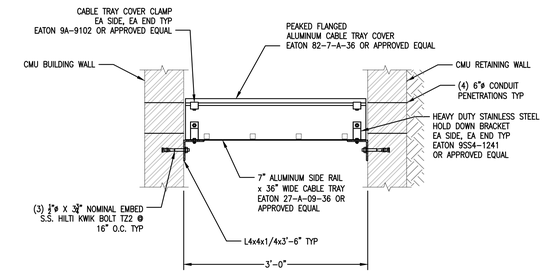

12 — EXTERIOR LADDER RACK DETAIL
SCALE: 1"=1'-0"

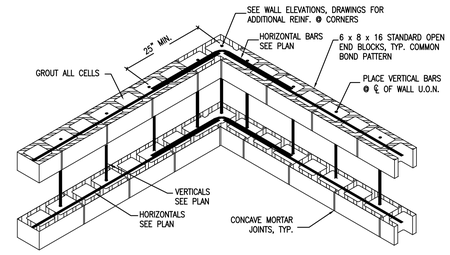

9 — TYP CMU WALL DETAILS
SCALE: NONE

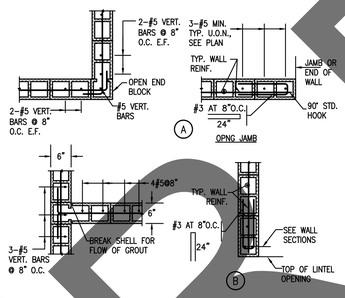

8 — TYP CMU WALL DETAILS
SCALE: NONE

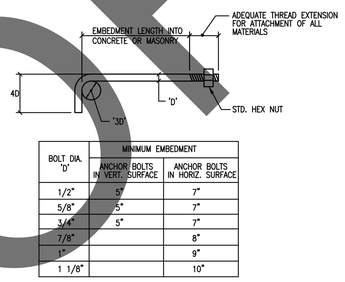

BOLT DIA. 'D'	MINIMUM EMBEDMENT	
	ANCHOR BOLTS IN VERT. SURFACE	ANCHOR BOLTS IN HORIZ. SURFACE
1/2"	5"	7"
5/8"	5"	7"
3/4"	5"	7"
7/8"		8"
1"		9"
1 1/8"		10"

7 — ANCHOR BOLT IN CMU SCHED
SCALE: NONE

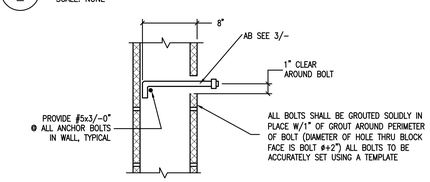

6 — TYP ANCHOR BOLT IN CMU
SCALE: NONE

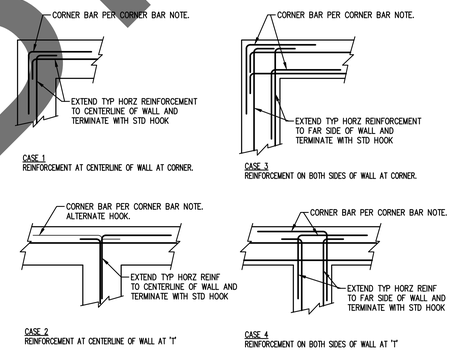

CORNER BAR NOTES:
1) FOR CMU, CORNER BAR LENGTH SHALL BE AT LEAST 40 BAR DIAMETERS.
2) FOR CONCRETE, CORNER BAR LENGTHS SHALL BE AT LEAST 30 BAR DIAMETERS.
3) MIN BAR LENGTH IS 1'-6" UNLESS WALL IS RETAINING SOIL THEN MIN IS 3'-6"

4 — TYP FOOTING INTERSECTION
SCALE: NONE

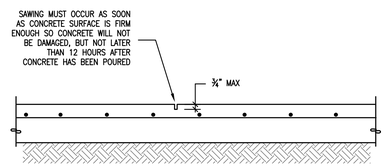

3 — CONTROL JOINT (CJ)
SCALE: NONE

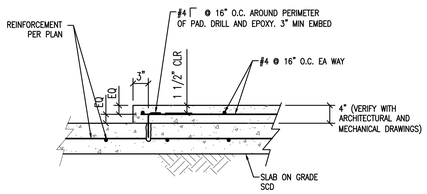

2 — EQUIPMENT PAD
SCALE: NONE

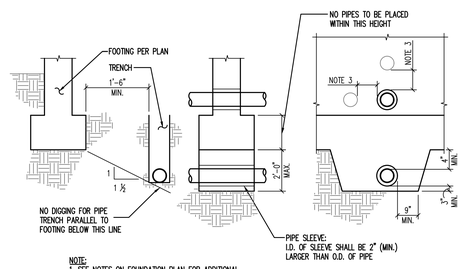

NOTE:
1. SEE NOTES ON FOUNDATION PLAN FOR ADDITIONAL.
2. PIPE & CONDUIT MUST RUN PERP. THRU WALL.
3. VERTICAL AND HORIZONTAL CLEAR SPACE BETWEEN ADJACENT PIPE SLEEVES SHALL NOT BE LESS THAN THE DIAMETER OF THE LARGER SLEEVE.

1 — TYP FTG @ PIPE OR CONDUIT
SCALE: NONE

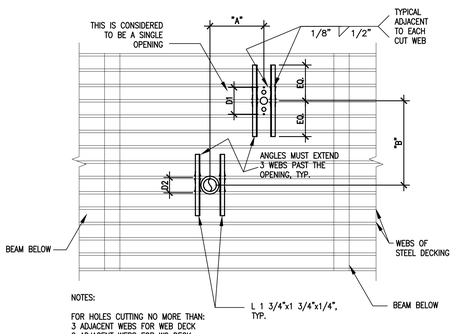

NOTES:

FOR HOLES CUTTING NO MORE THAN:
3 ADJACENT WEBS FOR WEB DECK
2 ADJACENT WEBS FOR W2 DECK

ANGLES SHALL BE PLACED ON TOP OF DECK.

IF DIMENSION "A" IS GREATER THAN 4D 4D OR 32" WHICHEVER IS LARGER, THEN THERE IS NO RESTRICTION ON DIMENSION "B".

IF DIMENSION "B" IS GREATER THAN 4D 4D OR 32" WHICHEVER IS LARGER, THEN THERE IS NO RESTRICTION ON DIMENSION "A".

IF DIMENSION "A" AND "B" ARE LESS THAN 4D 4D OR 32" WHICHEVER IS LARGER, THE OPENING GROUP WILL BE CONSIDERED AS A SINGLE HOLE, AND MUST BE REINFORCED AS REQUIRED FOR THE LARGER OPENING.

14 — DECK SMALL HOLES
SCALE: NONE

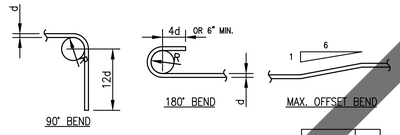

BAR SIZE	R
#3 TIES & STIRRUPS	2d
#3–#8	3d
#9–#11	4d
#14–#18	5d

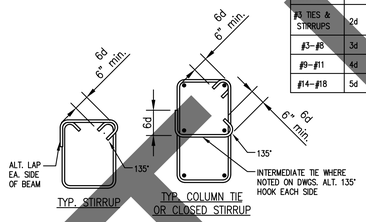

11 — REINF STANDARD BAR HOOK & BEND
SCALE: NTS

CLASS 'B' SPLICES (f'c = 4,000 PSI)		
BAR SIZE	OTHERS	TOP
#3	19"	25"
#4	25"	33"
#5	31"	41"
#6	37"	49"
#7	54"	71"
#8	62"	81"
#9	70"	91"
#10	79"	102"
#11	87"	114"

USE CLASS 'B' SPLICES U.O.N.

NOTES:
1. LAP LENGTHS SHOWN IN THE SCHEDULE ARE CLASS "B" LAP SPLICES PER THE 2019 CBC (ACI 318-14). THE MINIMUM CONCRETE COVER MUST BE GREATER THAN DB AND THE CENTER TO CENTER SPACING MUST BE GREATER THAN 3DB. WHERE DB IS THE NOMINAL BAR DIAMETER.
2. TOP BARS ARE HORIZONTAL BARS WITH MORE THAN 12" OF CONCRETE BELOW THE BAR.
3. THE SMALLER LAP SPLICE LENGTH MAY BE USED WHEN TWO BARS OF DIFFERENT SIZES ARE TO BE LAPPED.

10 — MINIMUM REINF BAR SPLICES
SCALE: NONE

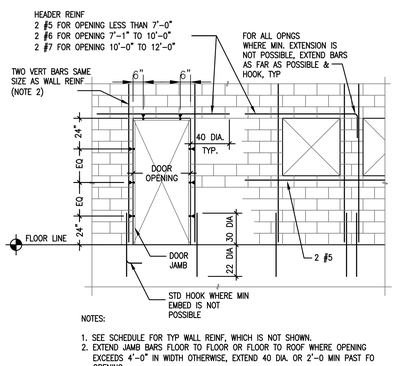

NOTES:
1. SEE SCHEDULE FOR TYP WALL REINF, WHICH IS NOT SHOWN.
2. EXTEND JAMB BARS FLOOR TO FLOOR OR FLOOR TO ROOF WHERE OPENING EXCEEDS 4'-0" IN WIDTH OTHERWISE, EXTEND 40 DIA. OR 2'-0 MIN PAST FO OPENING.

5 — TYP REINF @ CMU WALL OPNG
SCALE: NONE UNLESS NOTED OTHERWISE

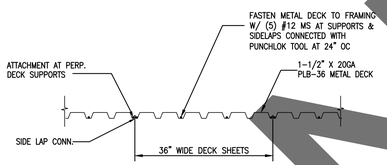

NOTES:
1. DECK SHEETS SHALL BE CONTINUOUS OVER 2 OR MORE SPANS UNLESS OTHERWISE INDICATED ON THE DRAWINGS.

13 — ROOF DECK
SCALE: NONE

NOTES

1. FOR GENERAL NOTES, SEE DRAWING S-0.1.

LEGEND

DENOTES (E) STRUCTURE
DENOTES (N) STRUCTURE

NOT FOR BID

SALASO'BRIEN
| expect a difference |
3700 South Susan Street, Ste 150
Santa Ana, California 92704
949.517.4900 | 408.297.2995 (f)
salasobrien.com
California | Georgia | Louisiana
Montana | Texas | Washington
Licensed in 50 States

CPS
COMPLEXE PROJECT SOLUCIONS
3527 MT. DIABLO BOULEVARD #137, LAFAYETTE, CA 94549
(925) 285-2229 WWW.CPS-GLOBAL.COM

REGISTERED PROFESSIONAL ENGINEER
THOMAS C. FOX
No. S 9931
Exp. Dec 31, 2023
STRUCTURAL
STATE OF CALIFORNIA

CPS Project No.: A1305

REGISTERED PROFESSIONAL ENGINEER
TONY KEY CHIU
No. E18090
ELECTRICAL
STATE OF CALIFORNIA

SAN BERNARDINO COUNTY

800MHZ UPGRADES -
CAJON PASS TOWER

WBSE #10.10.1011
CIP #20-225

ISSUE		
MARK	DATE	DESCRIPTION
	12/23/21	95% CD
	12/16/22	100% CD

SOBE PROJECT NO:	2002862
DATE:	12/16/22
DRAWN BY:	TD
CHECKED BY:	TE
APPROVED BY:	TE

SHEET TITLE
DETAILS

SCALE: AS NOTED
THIS DRAWING IS 30" X 42" AT FULL SIZE

S-5.1

THIS DRAWING IS 30" X 42" AT FULL SIZE. 15" X 21" AT HALF SIZE. © 2015 BY SALAS O'BRIEN ENGINEERS, INC.

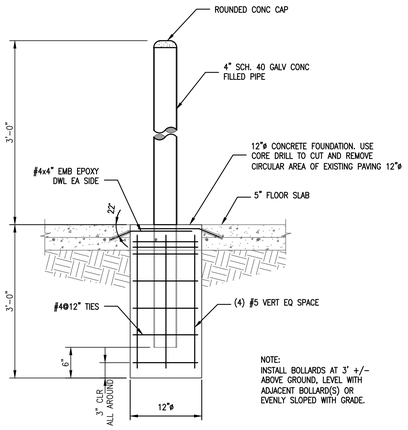

10 — FIXED BOLLARD
SCALE: NONE

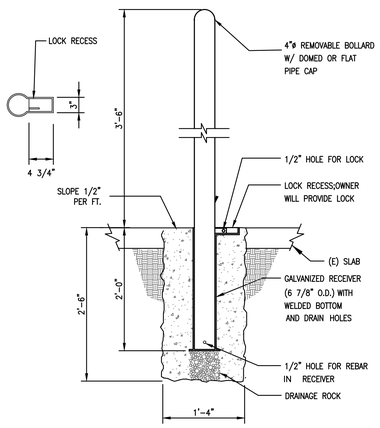

9 — REMOVABLE BOLLARD
SCALE: NONE

RETAINING WALL SCHEDULE				
WALL HEIGHT RANGE ID (SEE PLAN)	WALL HEIGHT RANGE 'H'	FOOTING THICKNESS 'T'	FOOTING WIDTH 'W'	FOOTING REBAR SIZE 'D'
1	0'-6" TO 2'-0"	12"	2'-4"	4
2	2'-0" TO 3'-0"	12"	3'-4"	4
3	3'-0" TO 4'-0"	14"	4'-6"	5
4	4'-0" TO 5'-0"	18"	5'-4"	5

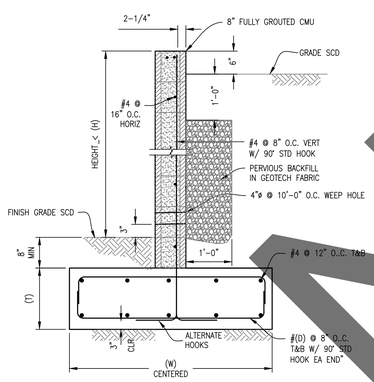

8 — RETAINING WALL
SCALE: 1"=1'-0"

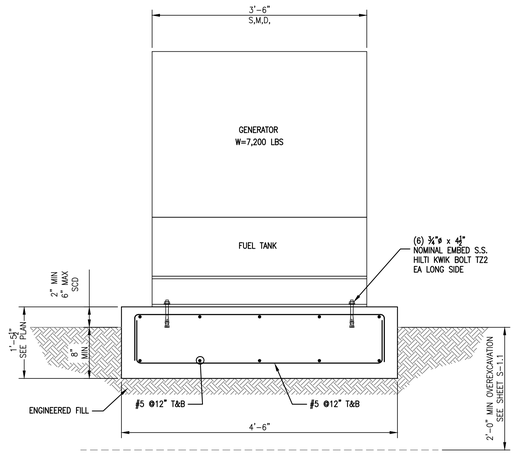

7 — GENERATOR FOUNDATION
SCALE: 1"=1'-0"

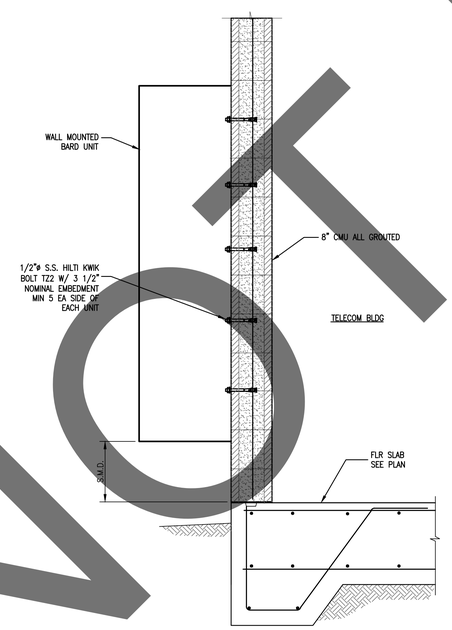

6 — AC UNIT SUPPORT
SCALE: 1"=1'-0"

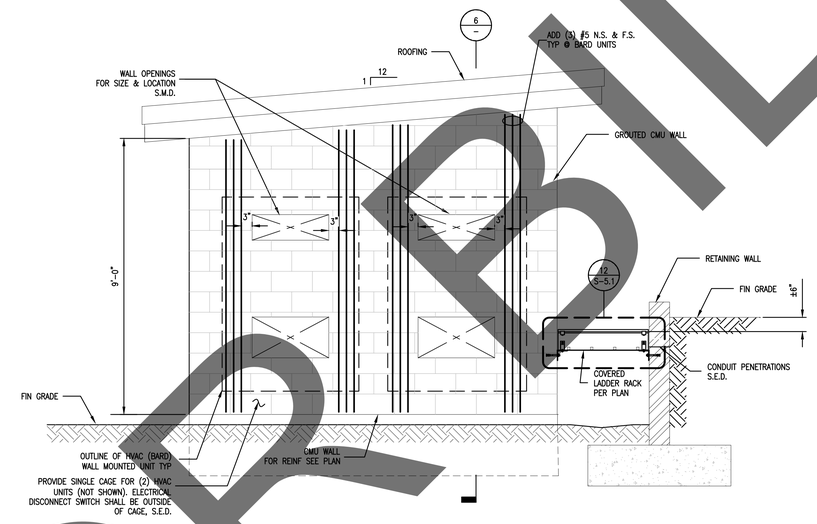

3 — WEST WALL ELEVATION BARD HVAC UNITS
SCALE: NONE

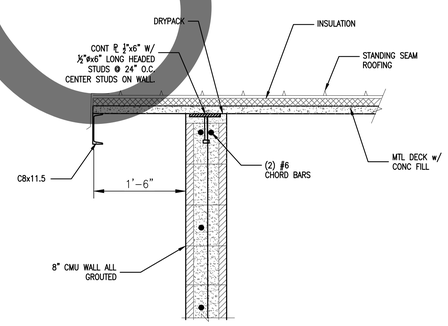

5 — MTL DECK SUPPORT SECTION
SCALE: 1"=1'-0"

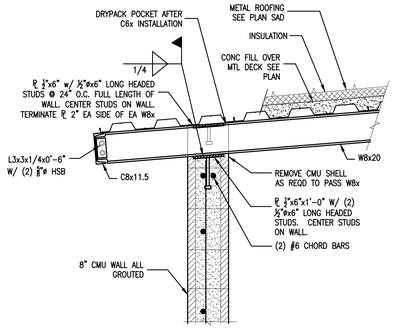

2 — Wx SUPPORT SECTION
SCALE: 1"=1'-0"
TELECOM BLDG

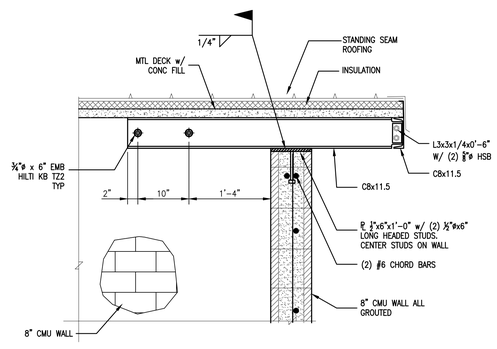

4 — ROOF @ CORNER SUPPORT
SCALE: 1"=1'-0"

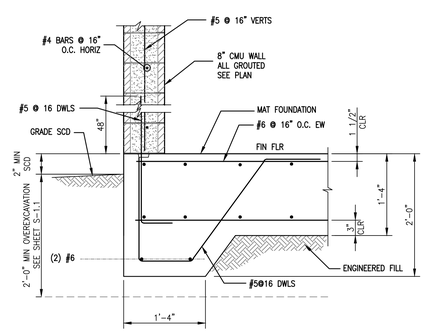

1 — CMU WALL SECTION
SCALE: NONE

NOTES

1. FOR GENERAL NOTES, SEE DRAWING S-0.1.

LEGEND

DENOTES (E) STRUCTURE
DENOTES (N) STRUCTURE

NOT FOR BID

SALASO'BRIEN
| expect a difference |
3700 South Susan Street, Ste 150
Santa Ana, California 92704
949.517.4900 | 408.297.2995 (f)
salasobrien.com
California | Georgia | Louisiana
Montana | Texas | Washington
Licensed in 50 States

CPS
COMPLEX PROJECT SOLUTIONS
3527 MT. DIABLO BOULEVARD #137, LAFAYETTE, CA 94549
(925) 285-2229 WWW.CPS-GLOBAL.COM

REGISTERED PROFESSIONAL ENGINEER THOMAS C. TAYLOR No. S 99317 Exp. Dec 31, 2023 STRUCTURAL STATE OF CALIFORNIA
CPS Project No.: A1305

REGISTERED PROFESSIONAL ENGINEER KIT CHUNG LAU No. E18090 ELECTRICAL STATE OF CALIFORNIA

SAN BERNARDINO COUNTY

800MHZ UPGRADES - CAJON PASS TOWER

WBSE #10.10.1011
CIP #20-225

ISSUE		
MARK	DATE	DESCRIPTION
	12/23/21	95% CD
	12/16/22	100% CD

SOBE PROJECT NO:	2002862
DATE:	12/16/22
DRAWN BY:	TD
CHECKED BY:	TE
APPROVED BY:	TE

SHEET TITLE
DETAILS

SCALE: AS NOTED
THIS DRAWING IS 30" X 42" AT FULL SIZE

S-5.2

THIS DRAWING IS 30" X 42" AT FULL SIZE, 15" X 21" AT HALF SIZE. © 2015 BY SALAS O'BRIEN ENGINEERS, INC.

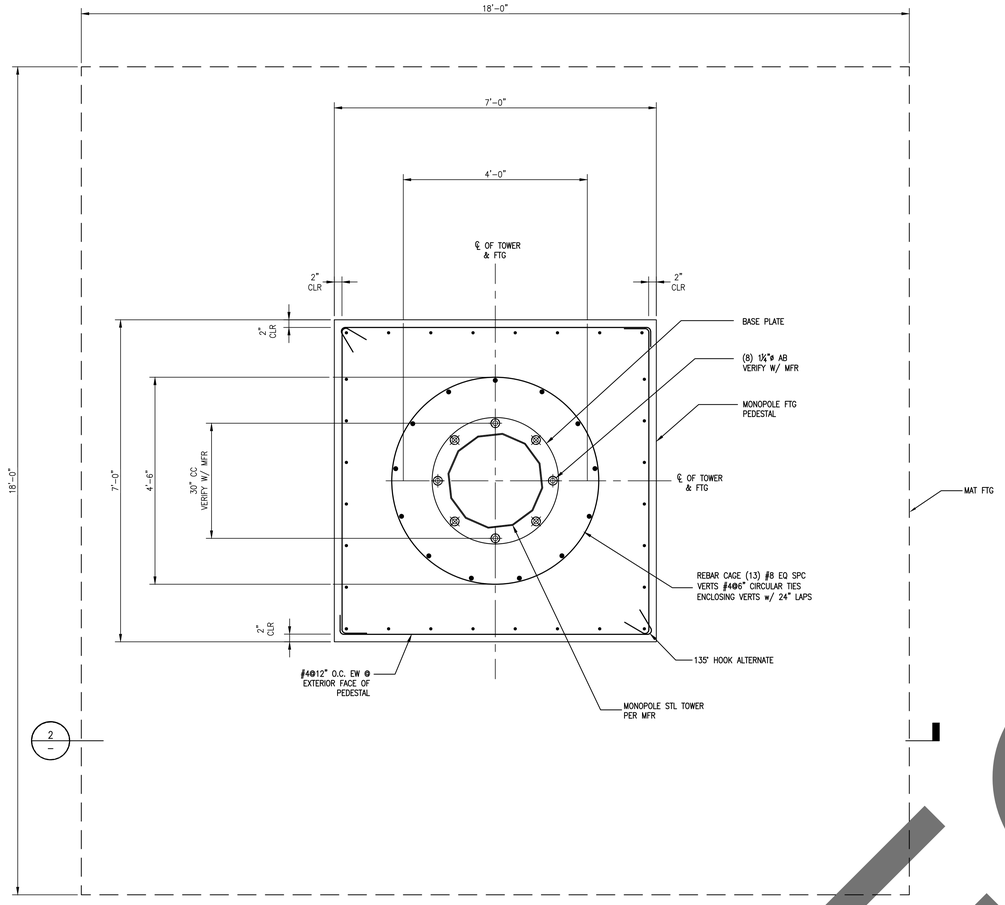

3 — MONOPOLE TOWER FTG PLAN
SCALE: 3/4"=1'-0"

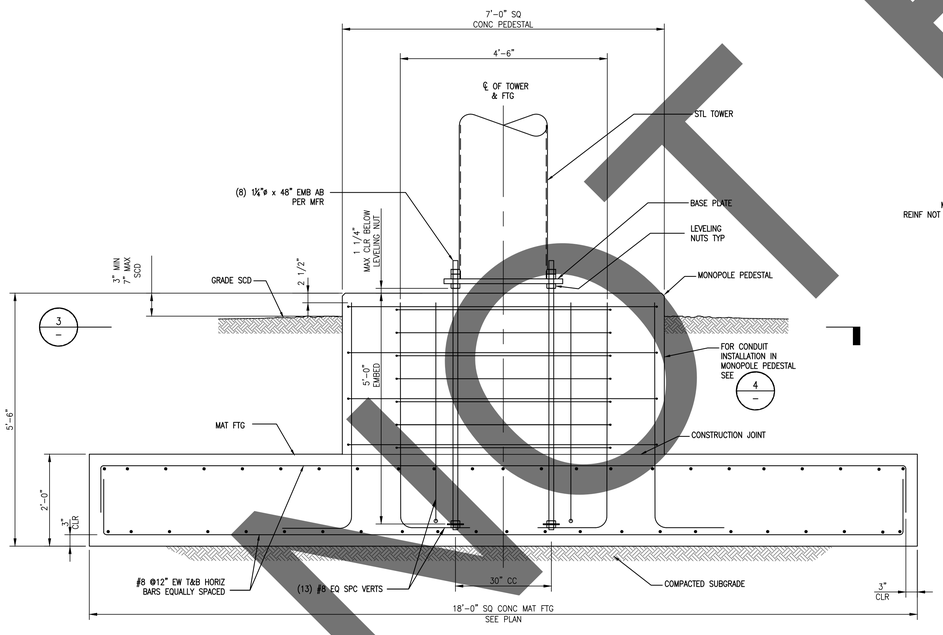

2 — MONOPOLE TOWER FTG SECTION
SCALE: 3/4"=1'-0"

MONOPOLE REQUIREMENTS

1. THIS IS A TURN-KEY PROJECT. THE PROJECT SHALL INCLUDE THE DESIGN, STRUCTURAL CALCULATIONS, FABRICATION AND INSTALLATION OF THE MONOPOLE. THE MONOPOLE SHALL ALSO INCLUDE THE ITEMS AS LISTED BELOW. CONTRACTOR SHALL DEVELOP AND PROVIDE A FULL SET OF PROFESSIONALLY ENGINEERED SHOP DRAWINGS AND STRUCTURAL CALCULATIONS FOR THE MONOPOLE AND MONOPOLE ANCHOR BOLTS, AND SHALL SUBMIT FOR REVIEW AND APPROVAL. SUBMITTAL SHALL INCLUDE MONOPOLE BASE REACTIONS TO ENABLE CONFIRMATION OF FOUNDATION DESIGN. ALL MATERIALS AND INSTALLATION OF MATERIALS SHALL BE COORDINATED WITH THE COUNTY TO ENSURE PROPER INSTALLATION. EQUIVALENT PRODUCTS MAY BE SUBMITTED FOR REVIEW AND APPROVAL PER GENERAL CONDITIONS.

2. MONOPOLE DESCRIPTION:
   50'-0" TALL (NOMINAL) TAPERED TEEL POLE DESIGNED TO SUPPORT THE FOLLOWING:

   DESIGN LOADING:

ELEV	ITEM	RAD	FEEDLINES
50'-0"	(3) 4'-5" STAND-OFF ARMS	–	(2) 1 $\frac{1}{2}$" (INSIDE POLE)
45'-0"	6 FT DISH	–	INSIDE POLE
40'-0"	6 FT DISH	–	INSIDE POLE

   ANTENNA MOUNTING SHALL BE A WELDED BRACKET DESIGNED BY THE MONOPOLE FABRICATOR FROM CUTSHEETS OF ANTENNA PROVIDED BY OWNER/ENGINEER.

3. MONOPOLE DESIGN CRITERIA:
   DESIGN CODE: ANSI/TIA-222-REV-H 2017
   WIND SPEED: 125 MPH
   WIND SPEED WITH ICE: N/A
   STRUCTURE CLASS: III
   EXPOSURE CATEGORY: C
   TOPOGRAPHIC CATEGORY: 3
   RISK CATEGORY IV
   SEISMIC ACCELERATION Ss: 1.694g
   MAX TWIST/SWAY DEFLECTION 0.837 DEGREES
   FALL RADIUS: 50 FEET

4. MONOPOLE REQUIREMENTS:
   POLE SECTIONS – HOT DIPPED GALVANIZED
   STEP BOLTS FOR CLIMBING
   TUF-TUG SAFETY CABLE TYPE SYSTEM WITH TROLLEY & JOURNEYMAN HARNESS
   (1) 5 FT LIGHTNING ROD
   TIA REV H STANDARD GROUNDING
   HAND HOLES
   EXIT PORT (COUNTY TO IDENTIFY ELEVATION & AZIMUTH)
   (1) CHAIN DISMOUNT WITH TIE-BACK SUPPORT FOR (2) TIE-BACKS
   (1) DUAL (ALL LED) LIGHTING W/ EXPOSED CABLE & STANDARD ALARM (TWR BRAND)

5. ADDITIONAL REQUIREMENTS:
   POLE SHALL BE DESIGNED WITH A 50 FEET FALL RADIUS CONSIDERATION
   STRUCTURE SHALL BE DESIGNED TO SUPPORT THE ANTENNAS AND TRANSMISSION LINES
   ALL WELDING SHALL CONFORM TO AWS

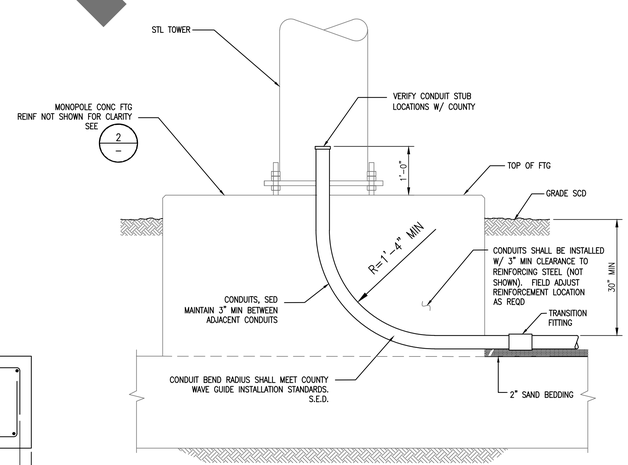

4 — CONDUIT RISER
SCALE: 3/4"=1'-0"

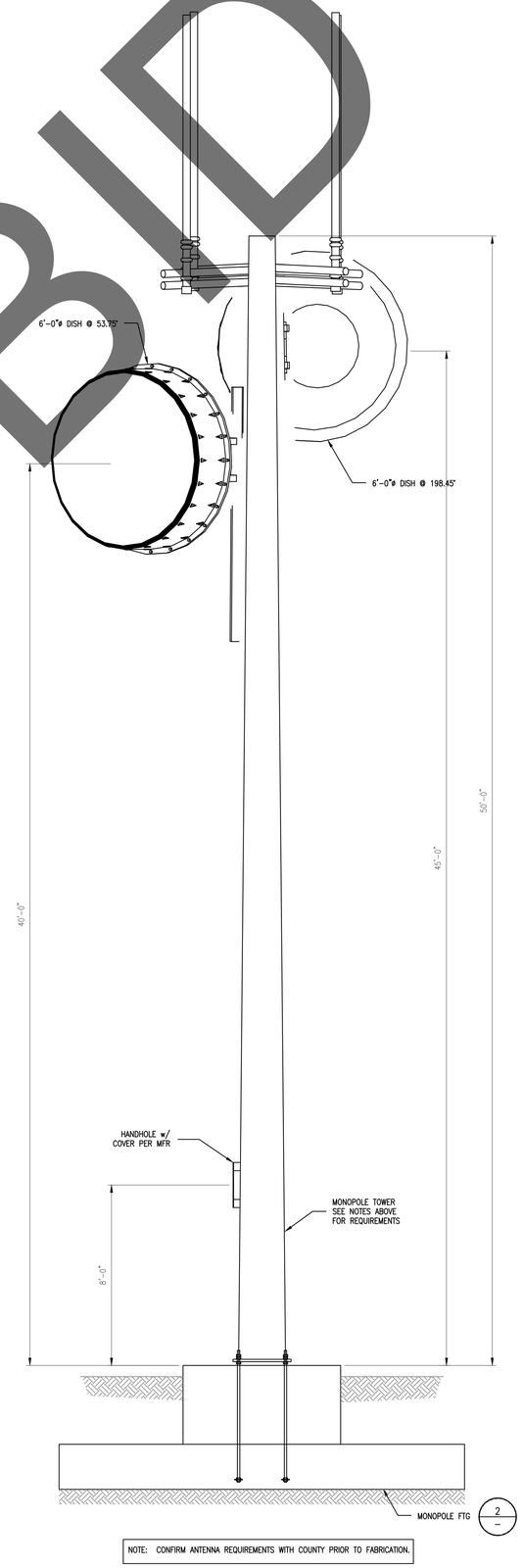

NOTE: CONFIRM ANTENNA REQUIREMENTS WITH COUNTY PRIOR TO FABRICATION.

1 — 50'-0" MONOPOLE ELEVATION
SCALE: 3/8"=1'-0"

NOT FOR BID

SALASO'BRIEN
| expect a difference |
3700 South Susan Street, Ste 150
Santa Ana, California 92704
949.517.4900 | 408.297.2995 (f)
salasobrien.com
California | Georgia | Louisiana
Montana | Texas | Washington
Licensed in 50 States

CPS
COMPLEX PROJECT SOLUTIONS
3527 MT. DIABLO BOULEVARD #137, LAFAYETTE, CA 94549
(925) 285-2229 WWW.CPS-GLOBAL.COM

REGISTERED PROFESSIONAL ENGINEER THOMAS C. EWERT No. S 5991 Exp. Dec 31, 2023 STRUCTURAL STATE OF CALIFORNIA

CPS Project No.: A1305

REGISTERED PROFESSIONAL ENGINEER TIMOTHY KEY CHYUNG No. E18090 ELECTRICAL STATE OF CALIFORNIA

SAN BERNARDINO COUNTY

800MHZ UPGRADES - CAJON PASS TOWER

WBSE #10.10.1011
CIP #20-225

ISSUE		
MARK	DATE	DESCRIPTION
	12/23/21	95% CD
	12/16/22	100% CD

SOBE PROJECT NO:	2002862
DATE:	12/16/22
DRAWN BY:	TD
CHECKED BY:	TE
APPROVED BY:	TE

SHEET TITLE
MONOPOLE REQUIREMENTS & FOUNDATION DETAILS

SCALE: AS NOTED
THIS DRAWING IS 30" X 42" AT FULL SIZE

S-5.3