CHARGING STATION/EQUIPMENT INFORMATION SECTION

Charging Station/Equipment Information

Number of Stations	5	Number of Connectors per Station	6
Total Number of Connectors	30	Charging Level	Level 3
CCS connector (DC Fast Charging)	true	Tesla connector (DC Fast Charging)	true
Voltage (v)	480	Power Output/Charging Rate (kW)	400

TECHNICAL SPECIFICATIONS OF CHARGING STATION

KEMPOWER

Charging equipment for electric vehicles

INSTALLATION MANUAL

Power Unit, Station Charger and Satellites

CONFIDENTIAL – CERTIFIED PARTNERS REV 2.40 en 04-2024

© Copyright Kempower Oyj 2024

All rights reserved. Subject to change without notice. No parts of this work may be reproduced in any form or by any means – graphic, electronic, or mechanical, including photocopying, recording, taping, or information storage and retrieval systems – without prior written permission of the copyright holder. Kempower may have one or more patents or pending applications that protect the intellectual property rights mentioned in this information. Products that are referred to in this information may be either trademarks and/or registered trademarks of the respective owners. The publisher and the author make no claim to these trademarks. Kempower and ChargEye are trademarks of Kempower Oyj, registered in the U.S. and other countries and regions. While every precaution has been taken in the preparation of this information, the publisher and the author assume no responsibility for errors or omissions, or for damages resulting from the use of this information or from the use of programs and source code that may accompany it. In no event shall the publisher and the author be liable for any loss of profit or any other commercial damage caused or alleged to have been caused directly or indirectly by these instructions. The original language of this information is English. Other language versions are translations from English. In case of a discrepancy, the English original will prevail. Kempower does not assume responsibility for errors in translation.

TABLE OF CONTENTS

1. Introduction ... 1
1.1. Disclaimer on products and services ... 1
1.2. Information about the warranty ... 2
1.3. Information about the manufacturer ... 2
1.4. Environment ... 3
1.5. Recycling ... 3
2. Safety ... 4
2.1. Symbols used in the instructions ... 4
2.2. Common risks ... 4
2.3. Defective or damaged equipment ... 5
2.4. Fire safety ... 5
2.5. Insulation monitoring circuit ... 6
3. Kempower charging equipment for electric vehicles ... 6
3.1. Charging power management ... 7
3.2. Identificators ... 9
3.3. Kempower charging power units ... 13
3.3.1. Power Unit ... 13
3.3.2. Power Unit Version 3 ... 14
3.3.3. Station Charger ... 15
3.4. Modules of the charging power unit ... 17
3.4.1. Power module ... 17
3.4.2. Dynamic power distribution module ... 18
3.4.3. Control module ... 19
3.4.4. Mains module ... 20
3.5. Steel base (option) ... 21
3.6. Kempower DC Satellites ... 24
3.6.1. Satellite ... 24
3.6.2. Satellite Version 2 ... 25
3.6.3. Liquid Cooled Satellite ... 26
3.6.4. Control Unit ... 27
3.7. Kempower AC Satellites ... 28
3.7.1. AC Satellite ... 28
3.7.2. AC Satellite with charging cables ... 29
3.7.3. AC Satellite Version 2 with charging cables ... 30
3.8. Mounting tube for Satellites (option) ... 31
3.9. Vehicle connector types ... 32
4. Planning the electric vehicle charging site ... 33
4.1. Mechanical planning ... 34
4.2. Electrical planning ... 36
4.2.1. AC mains power cables to the charging power unit ... 37
4.2.2. Cabling between the charging power unit and DC charging points ... 38
4.2.3. AC Satellite cabling ... 40
4.3. Required tools and equipment ... 41
5. Installing the charging equipment ... 42
5.1. Mechanical installation ... 42
5.1.1. Preparing for the installation ... 42
5.1.2. Installing the steel base (option) ... 44
5.1.3. Moving and lifting Power Unit ... 52
5.1.4. Moving and lifting Power Unit Version 3 ... 55
5.1.5. Moving and lifting Station Charger ... 59
5.1.6. Moving and lifting Satellite ... 63
5.1.7. Moving and lifting Liquid Cooled Satellite ... 64
5.1.8. Moving and lifting Control Unit ... 65
5.1.9. Installing the charging power unit ... 66

5.1.10. Installing Satellite ... 68
5.1.11. Installing Liquid Cooled Satellite ... 72
5.1.12. Installing Control Unit 200 A ... 74
5.1.13. Installing the charging cable to Satellite ... 78
5.2. Electrical installation ... 84
5.2.1. Preparing for the installation ... 84
5.2.2. Terminal blocks (charging power units manufactured before 6/2023) ... 85
5.2.3. Terminal blocks (charging power units manufactured after 6/2023) ... 87
5.2.4. Terminal blocks (Satellite Version 2) ... 89
5.2.5. Terminal blocks (Liquid Cooled Satellite) ... 90
5.2.6. Terminal blocks (Control Unit 200 A) ... 91
5.2.7. Installing Station Charger cables ... 91
5.2.8. Installing the AC mains power cables to the charging power unit ... 92
5.2.9. Installing the DC output power cables ... 93
5.2.10. Installing the control cables ... 94
5.2.11. Installing the communication cables ... 95
5.2.12. Connecting the DC input power cables to Liquid Cooled Satellite ... 99
5.2.13. Configuring the main switch of the charging power unit ... 100
5.2.14. Installing AC Satellite cables ... 102
6. Installing the equipment stop circuit (option) ... 105
6.1. Needed for the task ... 106
6.2. Task ... 106
7. Finishing the installation ... 114
7.1. Inspecting the installation ... 114
7.1.1. Sensory inspection ... 115
7.1.2. Electrical installation and safety inspection ... 116
8. Commissioning ... 117
8.1. Commissioning checklist ... 119
9. Unit footprints and clearances ... 120
9.1. Single cabinet footprint and fixing points ... 125
9.2. Double cabinet footprint and fixing points ... 126
9.3. Triple cabinet footprint and fixing points ... 127
9.4. Satellite footprint and fixing points ... 128
9.5. Liquid Cooled Satellite footprint and fixing points ... 129
9.6. Steel base footprints and fixing points ... 130
10. Examples of connecting output and control cables to charging points ... 132
10.1. Dynamic (Ds2) – 1 double Satellite ... 133
10.2. Dynamic (Ds2) – 2 single Satellites ... 133
10.3. Dynamic (Ds4) – 2 double Satellites ... 134
10.4. Dynamic (Ds4) – 4 single Satellites ... 134
10.5. Dynamic (Ds6) – 3 double Satellites ... 135
10.6. Dynamic (Ds6) – 6 single Satellites ... 135
10.7. Dynamic (Ds4) – 4 Liquid Cooled Satellites ... 136
10.8. Static (S4) – 1 single Satellite ... 136
10.9. Static (S4) – 4 single Satellites ... 137
10.10. Static (S4) – 2 double Satellites ... 137
10.11. Static (S8) – 8 single Satellites ... 138
11. Examples of connecting cables to the Satellites ... 139
11.1. Satellite Version 1 with one CCS vehicle connector ... 139
11.2. Satellite Version 1 with two CCS vehicle connectors ... 140
11.3. Satellite Version 1 with one CCS and one CHAdeMO vehicle connector ... 141
11.4. Satellite Version 2 with one CCS vehicle connector ... 142
11.5. Satellite Version 2 with two CCS vehicle connectors ... 143
11.6. Satellite Version 2 with one CCS and one CHAdeMO vehicle connector ... 144
11.7. Liquid Cooled Satellite with one CCS vehicle connector ... 145
11.8. X-Satellite with one CCS and one CHAdeMO vehicle connector ... 146

11.9. X-Satellite with one CCS, one CHAdeMO vehicle connector and a kWh meter 147
11.10. Control Unit 200 A with one CCS vehicle connector 148
11.11. AC Satellite Version 2 with two vehicle connectors 149
11.12. AC Satellite Version 2 with two sockets 150
11.13. AC Satellite Version 2 with two sockets or vehicle connectors 151
12. Control signal wires of the charging cable 152
12.1. CCS charging cables 152
12.2. CHAdeMO charging cables 153
12.3. AC charging cables 154
13. Examples of concrete foundations 156
14. Indicative dimensions for concrete foundations 157
15. Change log 161

1. INTRODUCTION

NOTICE
These instructions are for persons who have completed the Kempower certification training. Do not share these instructions with other parties without prior written permission of the copyright holder.

These instructions are for the installation of the following products manufactured by Kempower:

- Power Unit
- Power Unit Version 3
- Station Charger
- Satellite
- Satellite Version 2
- Liquid Cooled Satellite
- Control Unit
- AC Satellite
- AC Satellite with charging cables

For individual components not covered in these instructions, refer to the component manufacturer's specifications and instructions.

1.1. Disclaimer on products and services

Kempower electric vehicle (EV) charging equipment deliveries typically consist of charging power unit(s), charging points, and connectivity tools. Charging hardware and software, together with the power grid, data communication network, various electric vehicles, charging operators, and users, form a complex entity.

Kempower is not liable for incidental or consequential damages arising from the use of any software or hardware.

Kempower reserves the right to change the specification of the product described at any time without prior notice.

Kempower constantly develops the software in terms of vehicle support, new features, and improvement of user interface experience. Kempower offers software updates upon request or periodically as part of a service contract.

Kempower provides software support for all active and valid ChargEye licenses.

1.2. Information about the warranty

NOTICE
When you replace parts under warranty, keep the faulty part until you have made sure that Kempower does not need to inspect it.

NOTICE
You must complete the Kempower certification training before you do installation, commissioning, service or maintenance tasks. Installation, commissioning, service or maintenance tasks done by an unapproved partner will void the warranty.

NOTE
Kempower guarantees spare parts available for a minimum of 10 years after production ramp down for the product.

The warranty period is defined in your warranty policy. If you have purchased extended warranty, the warranty period is defined in your purchase agreement. For detailed information about the terms and conditions, see your warranty policy or purchase agreement. You can view the general warranty terms at kempower.com/kempower-terms-and-conditions.

The warranty only covers the product and its parts delivered by Kempower. The warranty does not cover consumable parts such as cables and connectors, any other materials, labor, accommodation, or travel costs.

1.3. Information about the manufacturer

Manufacturer	Kempower Oyj
Address	Ala-Okeroistentie 29, 15700 Lahti, Finland
Phone	+358 29 0021900
Contact	kempower.com/support
Website	kempower.com

1.4. Environment

DANGER
Electric vehicle charging equipment must be located at a safe distance from potentially explosive atmospheres. Know and obey local laws and regulations.

NOTE
See the product datasheets for specifications. Product datasheets are available at mediabank.kempower.com.

- The environment of the charging unit must conform with its IP classification.
- The airflow to and from the charging unit must be unrestricted.

1.5. Recycling

- The product labeled with this symbol reminds that the product contains electrical and electronic parts and batteries which must be recycled in compliance with the **2012/19/EU on waste electrical and electronic equipment (WEEE) directive**.
- Comply with local laws. Always return packaging materials to dedicated collection points in accordance with the symbols on the packaging. After end of the product's working life, the product must be delivered to the local waste management company, which handles the recycling of the product in accordance with the law and regulations.
- When you make sure that the product is correctly reused and recycled, you protect the environment.
- When waste treatment operations are carried out on a professional level, the product is almost fully recyclable.

2. SAFETY

2.1. Symbols used in the instructions

DANGER
Indicates a hazardous situation which, if not avoided, will cause death or serious injury.

WARNING
Indicates a potentially hazardous situation which, if not avoided, may cause death or serious injury.

CAUTION
Indicates a potentially hazardous situation which, if not avoided, may cause moderate or minor injury.

NOTICE
Indicates a situation which, if not avoided, may cause property damage or an undesirable result or state.

NOTE
Indicates advice and recommendations for the safe and efficient use of the product or highlights unusual points.

2.2. Common risks

DANGER
Electric vehicle charging equipment must be located at a safe distance from potentially explosive atmospheres. Know and obey local laws and regulations.

DANGER
High-voltage installation. Make sure that the units are correctly isolated and the lockout-tagout (LOTO) procedure completed when necessary during installation, service or maintenance work. Know and obey general and local safety regulations and procedures. Use adequate personal protection equipment (PPE).

WARNING
You must be authorized to do electrical work. The instructions are for persons who know electrical work and the applicable electrical safety requirements.

WARNING
The instructions are for persons who know civil works and the applicable safety requirements.

WARNING
You must complete the Kempower certification training before you do installation, commissioning, service or maintenance tasks. Installation, commissioning, service or maintenance tasks done by an unapproved partner will void the warranty.

WARNING
Do not use the charging unit if the unit, its cables or vehicle connectors are damaged. Risk of electrical shock or fire.

NOTICE
Changes or modifications to the charging equipment, unless specifically agreed upon with Kempower, are prohibited and will void the warranty.

NOTICE
Make sure that you have enough working space and that it is safe. Direct traffic accordingly. Weatherproof the working space if you do tasks that make it necessary.

NOTICE
Make sure that the installed Satellite is protected from direct sunlight. Risk of overheating and damage to electronic parts.

2.3. Defective or damaged equipment

WARNING
Do not use the charging unit if the unit, its cables or vehicle connectors are damaged. Risk of electrical shock or fire.

If you find that a charging unit is visibly damaged:

- Do not connect the vehicle connector to your vehicle or start a new charging session.
- Stop any ongoing charging sessions immediately and remove the vehicle connector from your vehicle.
- Contact your local service or maintenance provider.

2.4. Fire safety

WARNING
Do not use the charging unit if the unit, its cables or vehicle connectors are damaged. Risk of electrical shock or fire.

If there is a fire:

- If possible, stop the charging session, remove the vehicle connector from the vehicle, and move the vehicle away from the charging equipment.
- Only use fire extinguishers suitable for electric equipment (CO^2 fire extinguishers).
- Alert the local authorities and obey their instructions.
- If possible, turn the charging equipment off:

- Press the equipment stop button (if available).
- Disconnect the main power supply.

> **NOTE**
> The AC Satellite is not connected to a charging power unit. It is connected directly to the main power supply.

- After extinguishing the fire, always contact Kempower before you start any maintenance work. Kempower will perform a critical failure analysis before maintenance work can be done.

2.5. Insulation monitoring circuit

The Satellite includes an insulation monitoring circuit, which fulfills the requirements of IEC 61851-23:2014.

The internal measurement circuit measures leakage from DC+ and DC-. When no leakage is detected, operation continues normally. If leakage current is detected, the output is controlled to shut down and an alarm is displayed on the charging unit. The current detection limit is 6 mA.

3. KEMPOWER CHARGING EQUIPMENT FOR ELECTRIC VEHICLES

As the design of Kempower electric vehicle charging equipment is modular, the charging site can be expanded when necessary. The charging equipment is connected to the Internet and the Kempower ChargEye system via a cellular or Wi-Fi network.

- Kempower Power Unit is a charging power unit that receives power from the electric power distribution network and distributes it to 1–8 DC charging points. The Power Unit can be a single, double, or triple cabinet unit. Each cabinet can be equipped with 1–4 power modules (C500/500 V and C800/800 V). Charging power management can be dynamic or static, see 3.1: Charging power management.
- Kempower Station Charger consists of a charging power unit, 1–2 DC vehicle connectors per cabinet, and a user interface. The Station Charger can be a single or double cabinet unit.
- Kempower Satellite is the charging point connected to the charging power unit.
- Kempower Liquid Cooled Satellite is a high-power charging point connected to the charging power unit.

- Kempower Control Unit is a charging point connected to the charging power unit.
- Kempower AC Satellite is a standalone AC charging point that is not connected to a charging power unit but directly to the main power supply.

3.1. Charging power management

The charging power management method of the charging power unit can be dynamic or static. Dynamic charging power management is one of the key elements in optimizing the charging of electric vehicles. While it is possible to later expand the modular configuration, the type of charging power management cannot be changed from static to dynamic after installation unless you order a dynamic-ready configuration.

The charging power unit can have 1–12 power modules (1–4 per cabinet) that each have two independent power channels (2 x 25 kW). The power distribution module can distribute charging power to 1–8 charging points. The available charging power depends on the maximum charging power level that the electric vehicle can accept, the output capacity of the charging points, and the power capacity of the charging site.

In dynamic charging power management, the power distribution module routes and re-routes the power channels to the charging points during the charging session.

With parallel connection (Ds2, Ds4, Ds6, D8) of either C500 or C800 power modules, up to 8 charging points can deliver charging power in 25 kW steps, balancing the requirements of the vehicle(s) being charged and the load of the other charging points. The voltage reference for power calculation when planning the charging site is 400 V (for C500) and 667 V (for C800).

With series connection (Ds2, Ds4, Ds6) of C500 power modules, the power distribution module adapts the charger's voltage to the voltage type of the vehicle (500 V or 800 V). Up to 6 charging points can deliver charging power in 50 kW steps, balancing the requirements of the vehicle(s) being charged and the load of the other charging points. The voltage reference for power calculation when planning the charging site is 400 V (for 500 V vehicles) and 800 V (for 800 V vehicles).

In static (S2, S4, S8) charging power management, a fixed amount of charging power is routed to the charging point(s).

Table 1. Example of dynamic and static charging power management

Charging power unit with 4 x 50 kW power modules (200 kW)	Output to 4 charging points
Dynamic output (Ds4) @ 400 V	25–200 kW
Dynamic output (Ds4, adaptive voltage) @ 800 V	50–200 kW
Dynamic output (Ds4) @ 667 V	25–200 kW
Static output (S4) @ 500 V/800 V	50 kW

Dynamic charging can operate in two modes:

- Democratic mode where the charging power is distributed evenly to all charging points in use. See Figure 1.
- Priority mode where charging power is distributed in order of priority. The priority type is set in Kempower ChargEye and can be customized to your needs. For example, arrival priority (FIFO, first in first out) is where the first arrival gets the most charging power (as requested by the vehicle). When the first vehicle leaves, the freed capacity is shared in arrival priority with the remaining vehicles. See Figure 2.

Figure 1. Example of dynamic charging in democratic mode

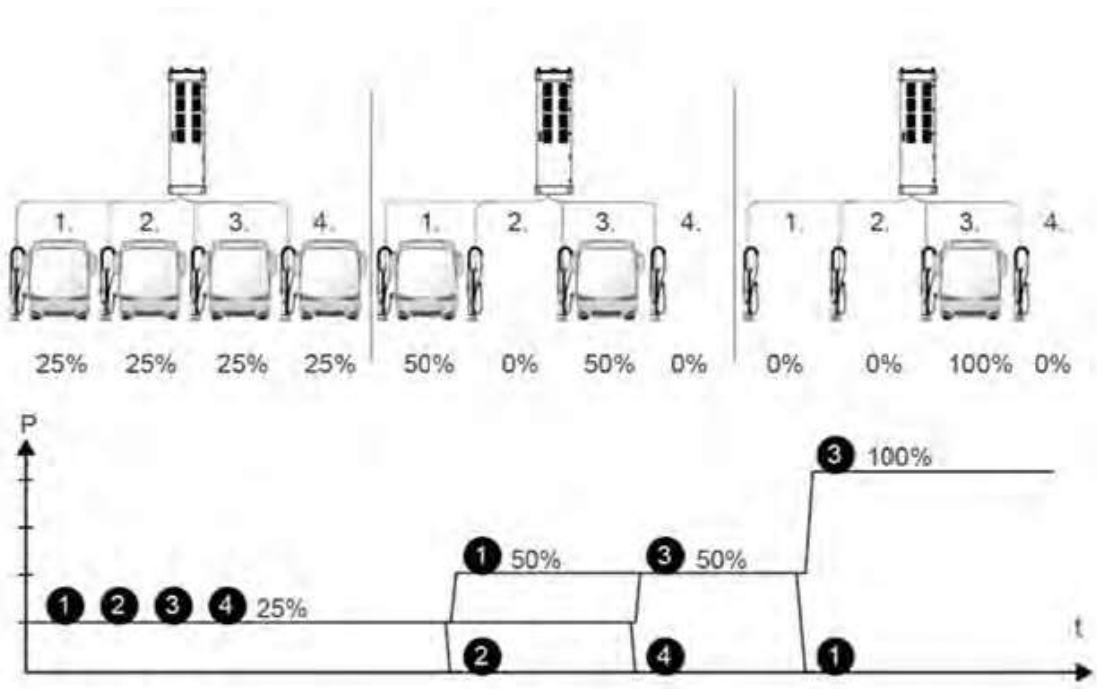

Figure 2. Example of dynamic charging in arrival priority mode (in this example the first vehicle requests only 75% of the available power)

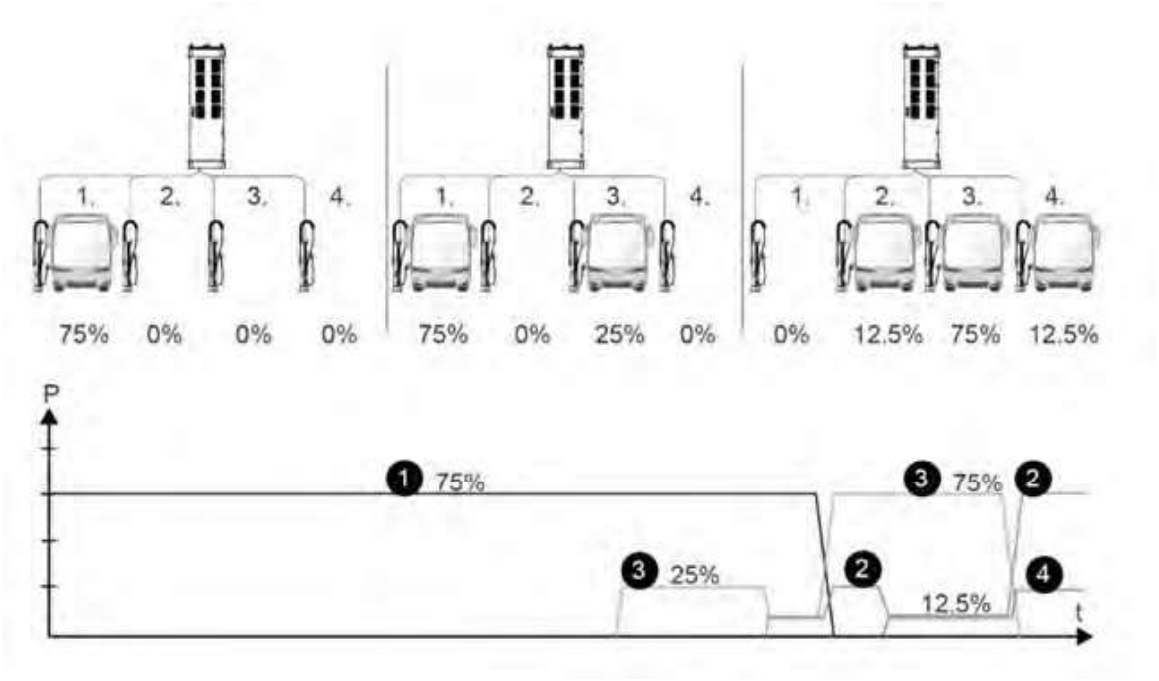

3.2. Identificators

Serial number

The serial number of the unit is given on the rating plate. The correct serial number is important when you order spare parts or repair the unit.

Quick response (QR) code or barcode

The serial number and other information about the unit can also be given as a QR code or barcode on the unit's rating plate. Use a mobile phone with a QR application or a code reader to access the information.

Rating plate

Information about the unit is marked on the rating plate. If the unit is upgraded, Kempower adds a retrofit sticker to the unit. The location of the rating plate on the units:

Product	Description	Image
Power Unit	On the left side of the cabinet, in the top right corner.	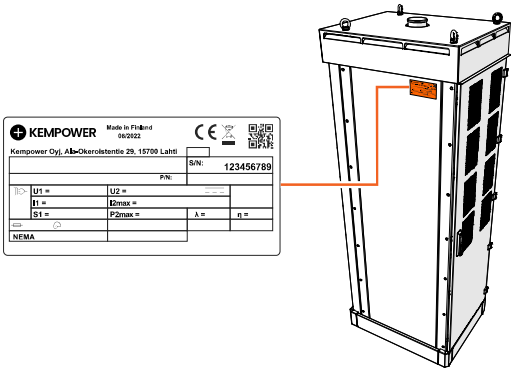
Power Unit Version 3	On the left side of the cabinet, in the top right corner.	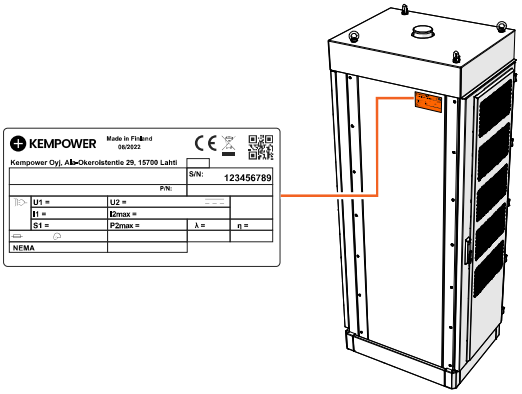
Station Charger	On the left side of the cabinet, in the top right corner.	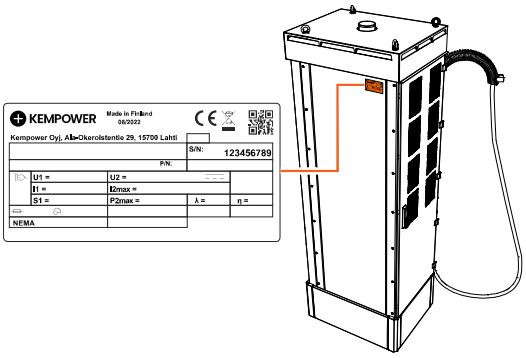

Product	Description	Image
Satellite	On the rear side of the unit, in the top right corner.	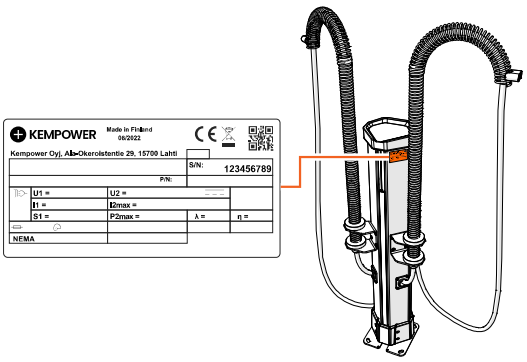
Satellite Version 2	On the rear side of the unit, in the top right corner.	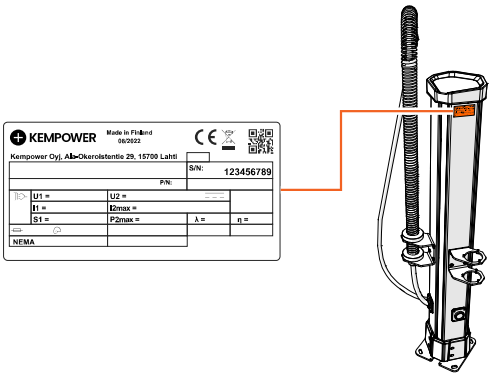
Liquid Cooled Satellite	On the rear side of the unit, in the top right corner.	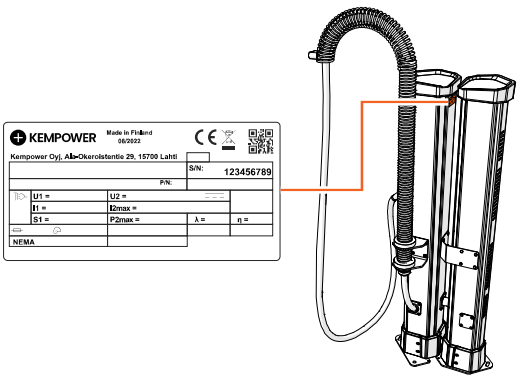

Product	Description	Image
Control Unit	On the left side of the unit, in the bottom left corner.	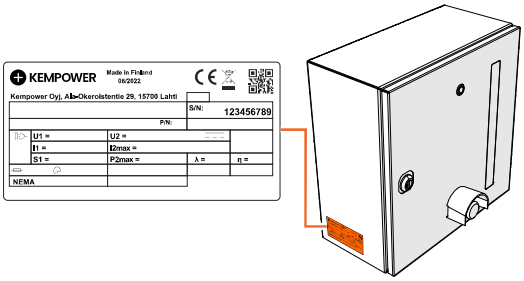
AC Satellite	On the rear side of the unit, in the top right corner.	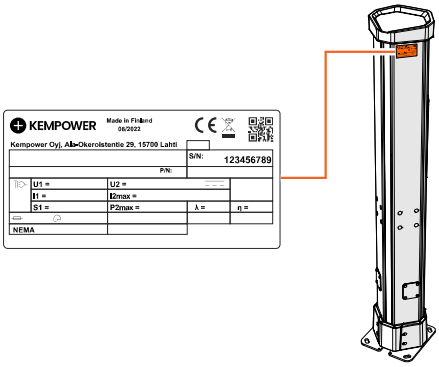
AC Satellite with charging cables	On the rear side of the unit, in the top right corner.	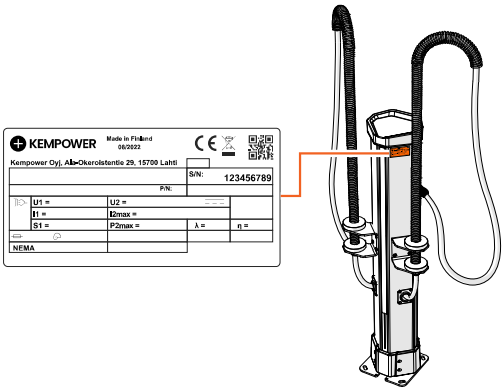

3.3. Kempower charging power units

3.3.1. Power Unit

NOTE
See the product datasheets for the dimensions and weights of the units. Product datasheets are available at mediabank.kempower.com.

NOTE
See 9: Unit footprints and clearances for the footprints and required clearances of the units.

Kempower Power Unit is a charging power unit that receives power from the electric power distribution network and distributes it to 1–8 DC charging points. Power Unit can be a single, double, or triple cabinet unit.

Each cabinet can be equipped with 1–4 power modules (C500/500 V and C800/800 V). One power module provides a maximum of 50 kW charging power.

Charging power management can be dynamic or static.

Figure 3. Kempower Power Unit overview (single cabinet, dynamic)

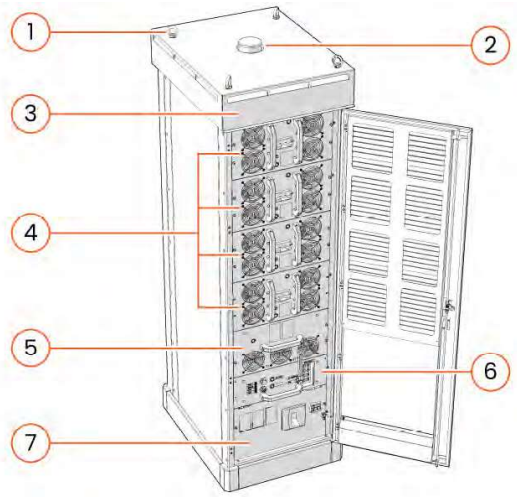

1	Lifting lugs	5	Power distribution module
2	Cellular/Wi-Fi antenna	6	Control module
3	Unit roof with cooling outlets	7	Mains module
4	Power modules (1–4 per cabinet)		

3.3.2. Power Unit Version 3

NOTE
See the product datasheets for the dimensions and weights of the units. Product datasheets are available at mediabank.kempower.com.

NOTE
See 9: Unit footprints and clearances for the footprints and required clearances of the units.

Kempower Power Unit Version 3 is a charging power unit that receives power from the electric power distribution network and distributes it to 1–8 DC charging points. Power Unit Version 3 can be a single, double, or triple cabinet unit.

Each cabinet can be equipped with 1–4 power modules (C500/500 V and C800/800 V). One power module provides a maximum of 50 kW charging power.

Charging power management can be dynamic or static.

Figure 4. Kempower Power Unit Version 3 overview (single cabinet, dynamic)

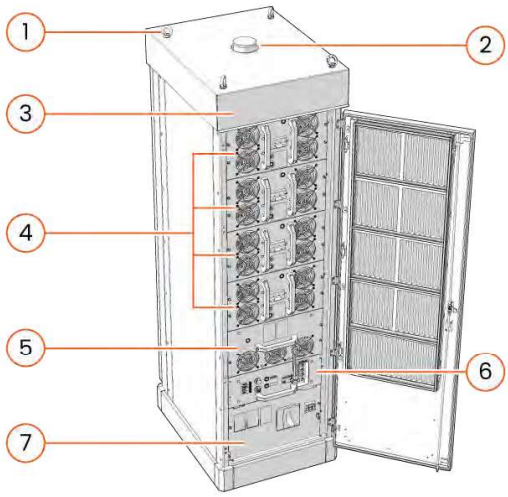

1	Lifting lugs	5	Power distribution module
2	Cellular/Wi-Fi antenna	6	Control module
3	Unit roof with cooling outlets	7	Mains module
4	Power modules (1–4 per cabinet)		