Unit viewed from right side of side elevation view.
Unit length: 23'-10 11/16"
Return Fan
0
Bag/Cartridge Filter 6 - 12 IN. Side Loading
Qty (4) 12in. x 24in.
Qty (8) 24in. x 24in.
Pre Filter : 2In. Flat Filter
Qty (4) 12in. x 24in.

Qty (8) 24in. x 24in.
Chilled Water 6 Row 11 FPI Double Circuit (qty. 2)
Draw-Thru Supply Fan
0
Operating weight: 8130.0 lbs.
Upstream Corner Weight (each): 1904.0 lbs.
Downstream Corner Weight (each): 2161.0 lbs.

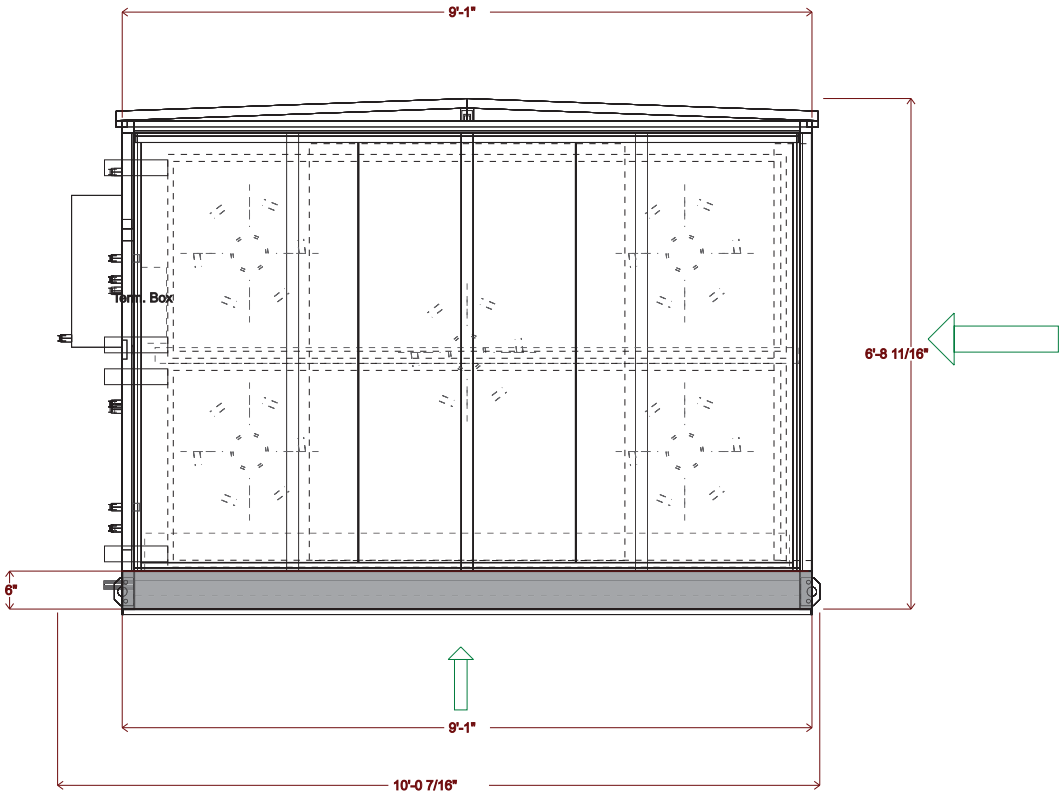

DATE	AHUBuilder	39M Central Station Air-Handler, Size 40W	REVISION
12/30/2024	v7.06	San Bernadino County Sherriff Station AHU: AH 2 Assembly Drawing	End View

THIS DOCUMENT IS THE PROPERTY OF CARRIER CORPORATION AND IS DELIVERED UPON THE EXPRESS CONDITION THAT THE CONTENTS WILL NOT BE DISCLOSED OR USED WITHOUT CARRIER CORPORATION'S WRITTEN CONSENT

SUBMISSION OF THESE DRAWINGS OR DOCUMENTS DOES NOT CONSTITUTE PART PERFORMANCE OR ACCEPTANCE OF CONTRACT

39MW

Unit height: 6'-8 3/16"
Return Fan
0
Bag/Cartridge Filter 6 - 12 IN. Side Loading
Qty (4) 12in. x 24in.
Qty (8) 24in. x 24in.
Pre Filter : 2In. Flat Filter
Qty (4) 12in. x 24in.

Qty (8) 24in. x 24in.
Chilled Water 6 Row 11 FPI Double Circuit (qty. 2)
Draw-Thru Supply Fan
0
Operating weight: 8130.0 lbs.
Upstream Corner Weight (each): 1904.0 lbs.
Downstream Corner Weight (each): 2161.0 lbs.

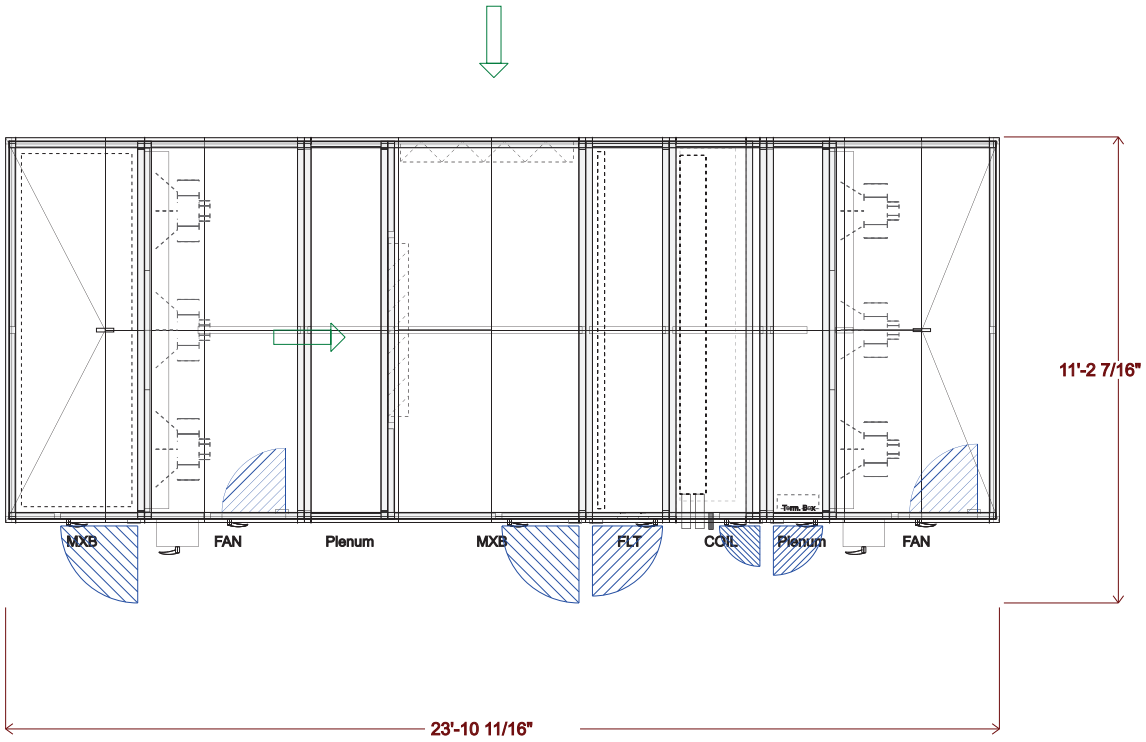

THIS DOCUMENT IS THE PROPERTY OF CARRIER CORPORATION AND IS DELIVERED UPON THE EXPRESS CONDITION THAT THE CONTENTS WILL NOT BE DISCLOSED OR USED WITHOUT CARRIER CORPORATION'S WRITTEN CONSENT

SUBMISSION OF THESE DRAWINGS OR DOCUMENTS DOES NOT CONSTITUTE PART PERFORMANCE OR ACCEPTANCE OF CONTRACT

39MW

DATE	AHUBuilder	39M Central Station Air-Handler, Size 40W	REVISION
12/30/2024	v7.06	San Bernadino County Sherriff Station AHU: AH 2 Assembly Drawing	Top View

Chilled Water 6 Row 11 FPI Double Circuit (qty. 2)

Pipe	x	y	diameter	Usage
A	16'-10 1/2"	3 13/16"	1 1/2"	DrainPan
B	16'-3 5/16"	3'-0 11/16"	2 1/2"	CW Outlet
C	16'-7 1/4"	8 11/16"	2 1/2"	CW Inlet
D	16'-3 5/16"	5'-9 3/4"	2 1/2"	CW Outlet
E	16'-7 1/4"	3'-5 3/4"	2 1/2"	CW Inlet

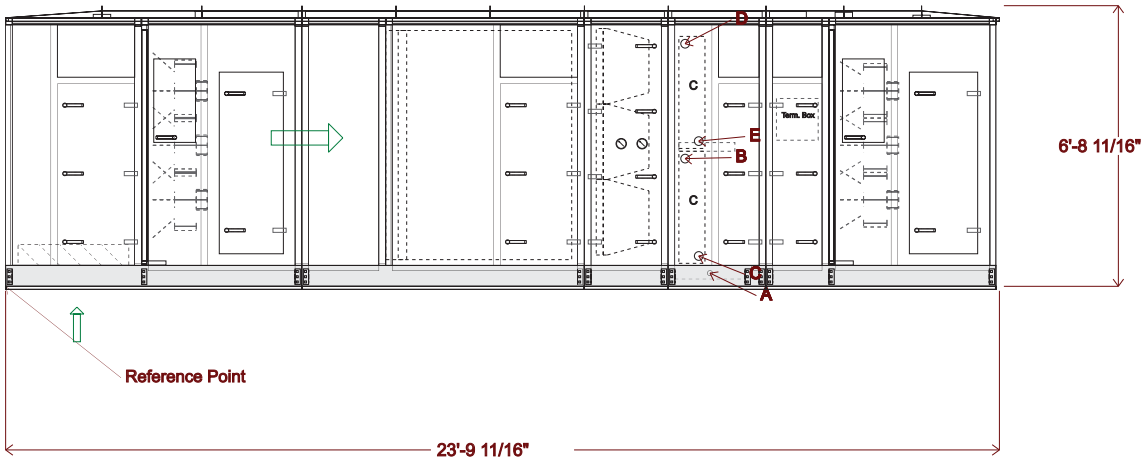

DATE	AHUBuilder	39M Central Station Air-Handler, Size 40W	REVISION
12/30/2024	v7.06	San Bernadino County Sherriff Station AHU: AH 2 Assembly Drawing	Side View

THIS DOCUMENT IS THE PROPERTY OF CARRIER CORPORATION AND IS DELIVERED UPON THE EXPRESS CONDITION THAT THE CONTENTS WILL NOT BE DISCLOSED OR USED WITHOUT CARRIER CORPORATION'S WRITTEN CONSENT

SUBMISSION OF THESE DRAWINGS OR DOCUMENTS DOES NOT CONSTITUTE PART PERFORMANCE OR ACCEPTANCE OF CONTRACT

39MW

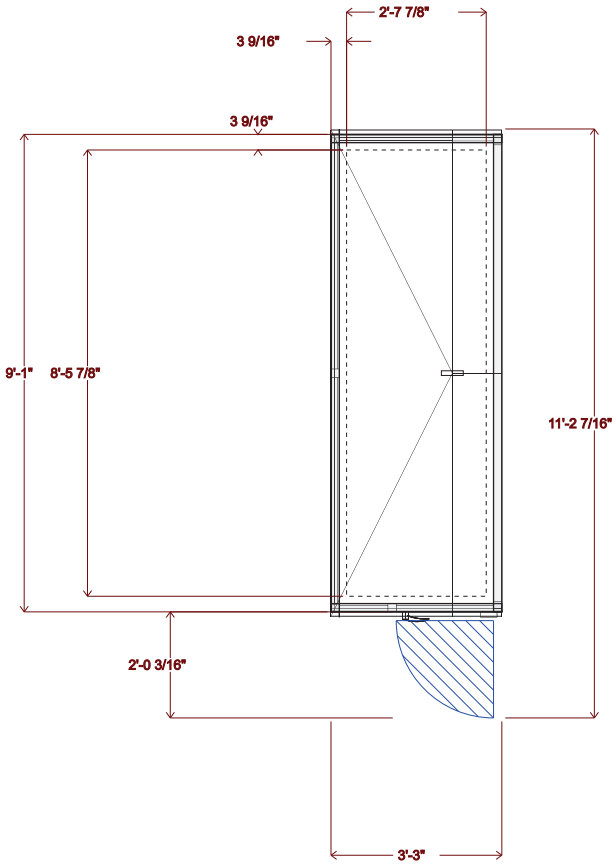

THIS DOCUMENT IS THE PROPERTY OF CARRIER CORPORATION AND IS DELIVERED UPON THE EXPRESS CONDITION THAT THE CONTENTS WILL NOT BE DISCLOSED OR USED WITHOUT CARRIER CORPORATION'S WRITTEN CONSENT

SUBMISSION OF THESE DRAWINGS OR DOCUMENTS DOES NOT CONSTITUTE PART PERFORMANCE OR ACCEPTANCE OF CONTRACT

39MW

DATE	AHUBuilder	39M Central Station Air-Handler, Size 40W San Bernadino County Sherriff Station AHU: AH 2 Mixing Box	REVISION
12/30/2024	v7.06		Top View

Unit viewed from right side of side elevation view.
Return Fan
0

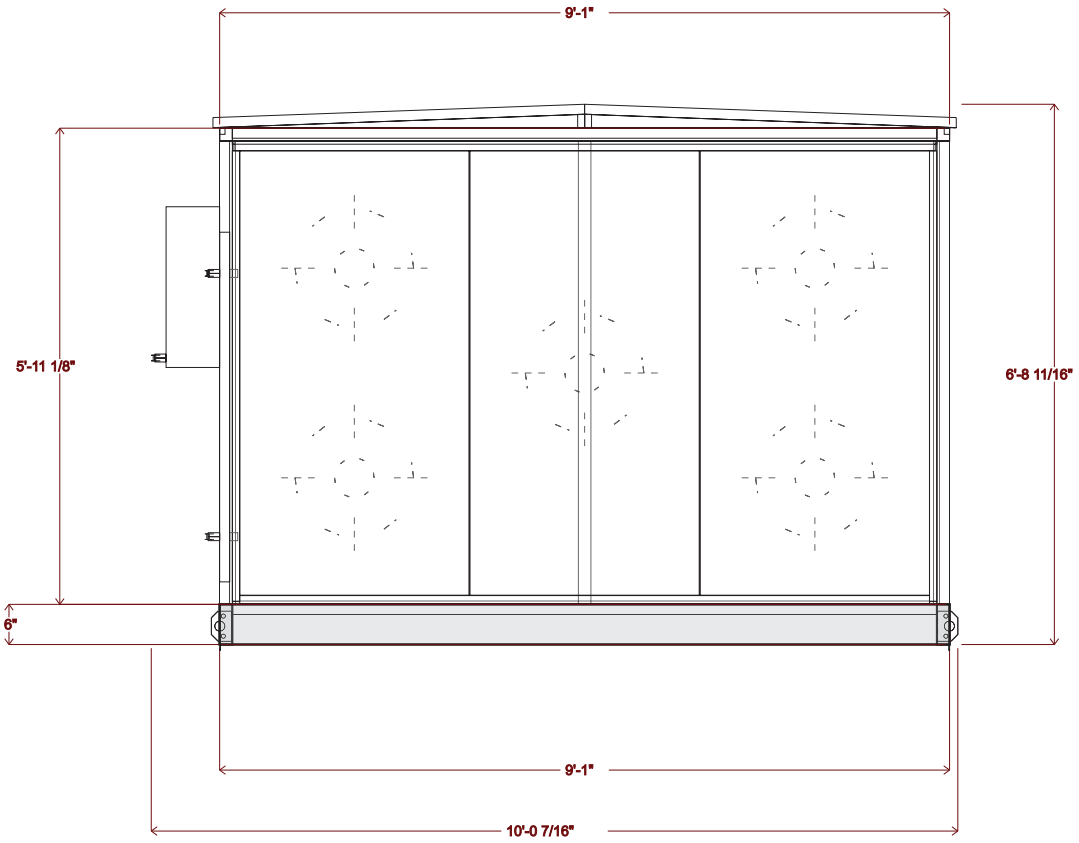

THIS DOCUMENT IS THE PROPERTY OF CARRIER CORPORATION AND IS DELIVERED UPON THE EXPRESS CONDITION THAT THE CONTENTS WILL NOT BE DISCLOSED OR USED WITHOUT CARRIER CORPORATION'S WRITTEN CONSENT

SUBMISSION OF THESE DRAWINGS OR DOCUMENTS DOES NOT CONSTITUTE PART PERFORMANCE OR ACCEPTANCE OF CONTRACT

39MW

DATE	AHUBuilder	39M Central Station Air-Handler, Size 40W San Bernadino County Sherriff Station AHU: AH 2 Return Fan	REVISION
12/30/2024	v7.06		End View

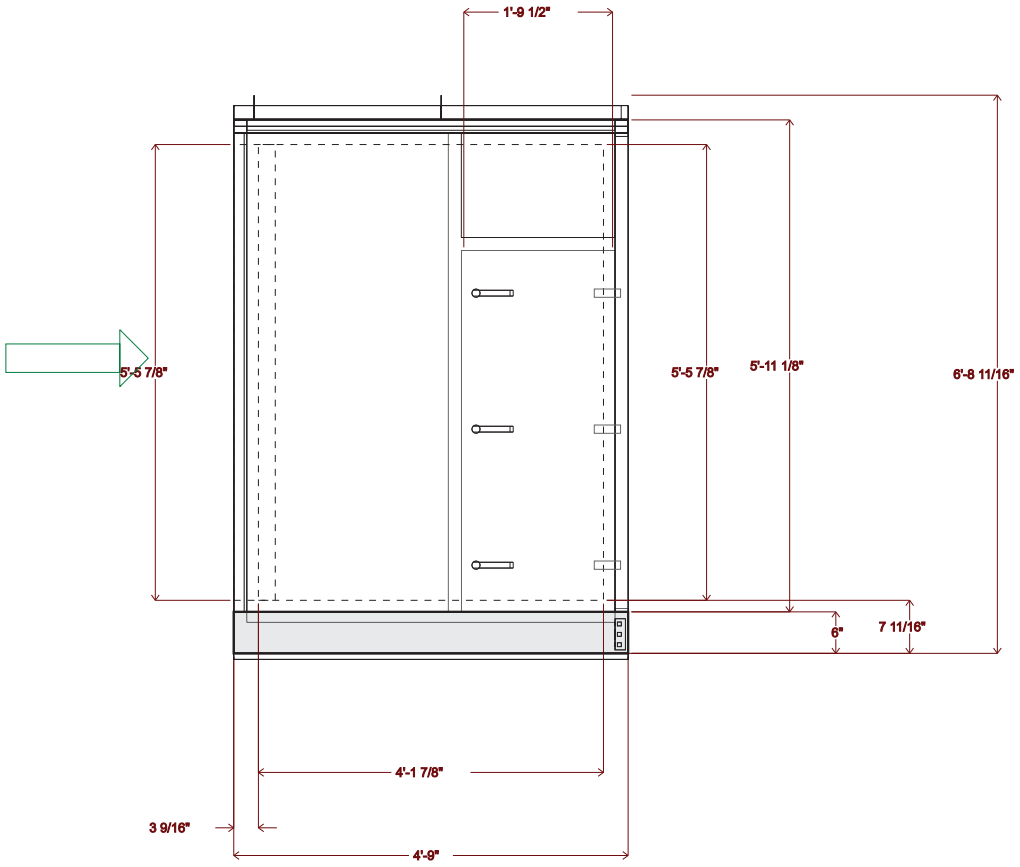

THIS DOCUMENT IS THE PROPERTY OF CARRIER CORPORATION AND IS DELIVERED UPON THE EXPRESS CONDITION THAT THE CONTENTS WILL NOT BE DISCLOSED OR USED WITHOUT CARRIER CORPORATION'S WRITTEN CONSENT

SUBMISSION OF THESE DRAWINGS OR DOCUMENTS DOES NOT CONSTITUTE PART PERFORMANCE OR ACCEPTANCE OF CONTRACT

39MW

DATE	AHUBuilder	39M Central Station Air-Handler, Size 40W	REVISION
12/30/2024	v7.06	San Bernadino County Sherriff Station AHU: AH 2 Mixing Box	Side View

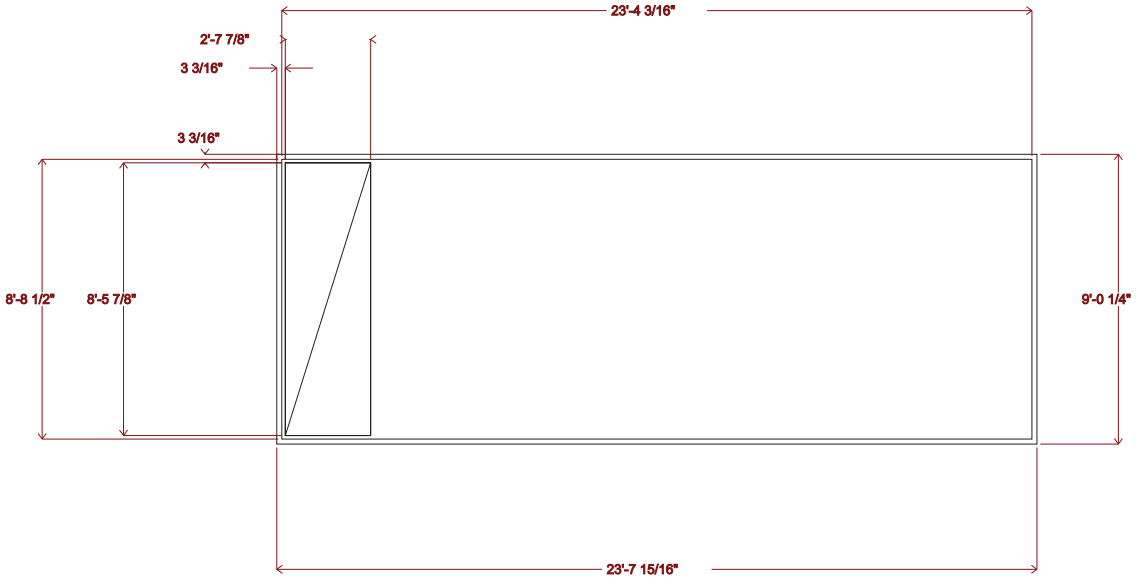

DATE	AHUBuilder	39M Central Station Air-Handler, Size 40W San Bernadino County Sherriff Station AHU: AH 2 Ahu Curb	REVISION
12/30/2024	v7.06		Top View

THIS DOCUMENT IS THE PROPERTY OF CARRIER CORPORATION AND IS DELIVERED UPON THE EXPRESS CONDITION THAT THE CONTENTS WILL NOT BE DISCLOSED OR USED WITHOUT CARRIER CORPORATION'S WRITTEN CONSENT

SUBMISSION OF THESE DRAWINGS OR DOCUMENTS DOES NOT CONSTITUTE PART PERFORMANCE OR ACCEPTANCE OF CONTRACT

39MW

DRAW-THRU

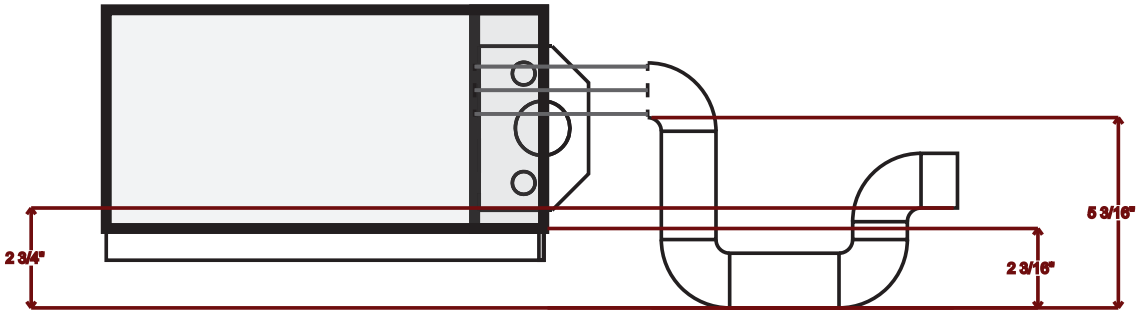

DATE	AHUBuilder	39M Central Station Air-Handler, Size 40W San Bernadino County Sherriff Station AHU: AH 2 Condensate Trap Dimensions	REVISION
12/30/2024	v7.06		End View

THIS DOCUMENT IS THE PROPERTY OF CARRIER CORPORATION AND IS DELIVERED UPON THE EXPRESS CONDITION THAT THE CONTENTS WILL NOT BE DISCLOSED OR USED WITHOUT CARRIER CORPORATION'S WRITTEN CONSENT

SUBMISSION OF THESE DRAWINGS OR DOCUMENTS DOES NOT CONSTITUTE PART PERFORMANCE OR ACCEPTANCE OF CONTRACT

39MW

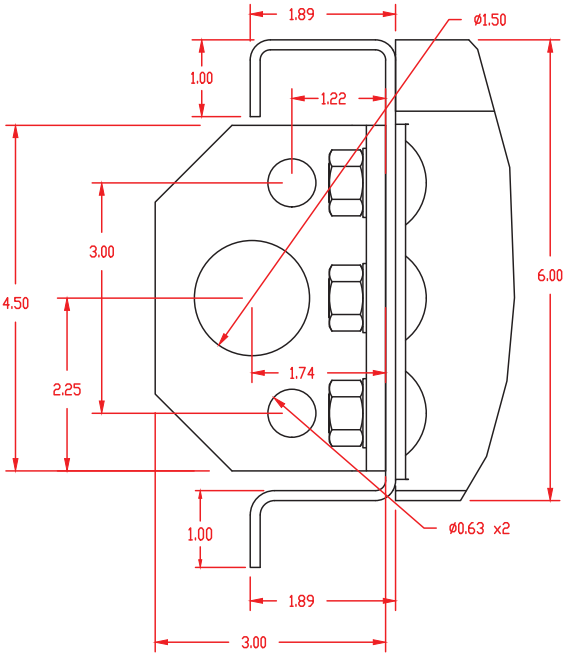

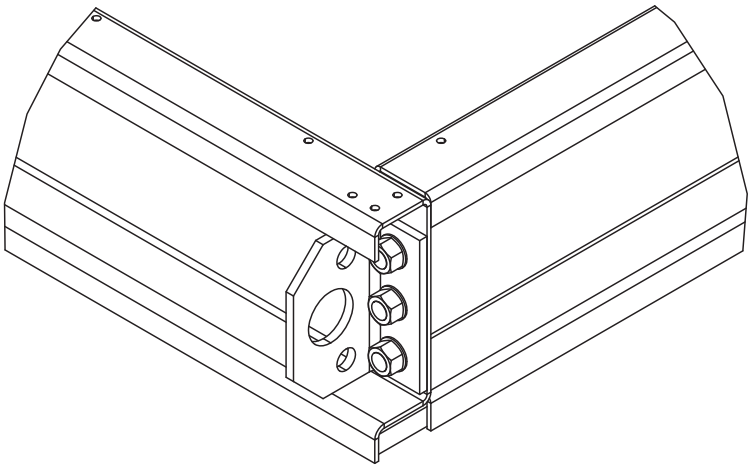

THIS DOCUMENT IS THE PROPERTY OF CARRIER CORPORATION AND IS DELIVERED UPON THE EXPRESS CONDITION THAT THE CONTENTS WILL NOT BE DISCLOSED OR USED WITHOUT CARRIER CORPORATION'S WRITTEN CONSENT

SUBMISSION OF THESE DRAWINGS OR DOCUMENTS DOES NOT CONSTITUTE PART PERFORMANCE OR ACCEPTANCE OF CONTRACT

39MW

DATE	AHUBuilder	39M Central Station Air-Handler, Size: 03 - 110	REVISION
2024-12-30	v7.06	6" Baserail and Lifting Lug Detail	

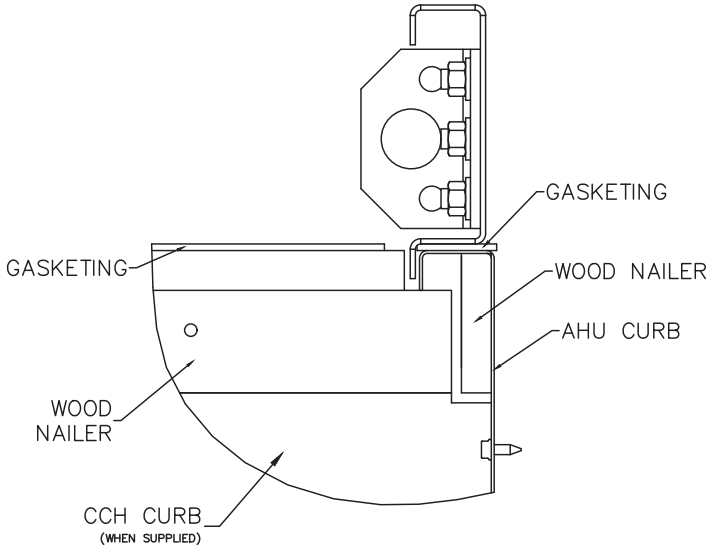

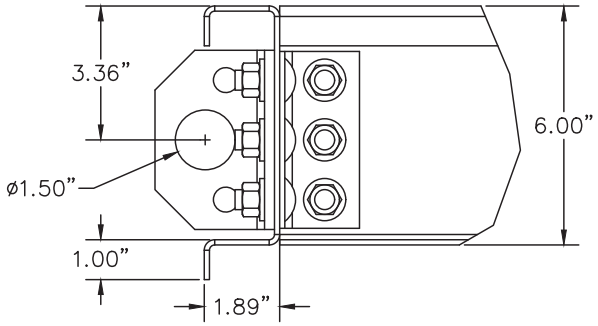

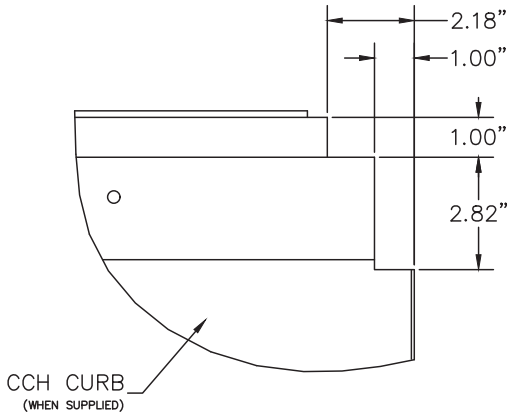

* 14" OR 24" STANDARD HEIGHT FLAT ROOF CURB

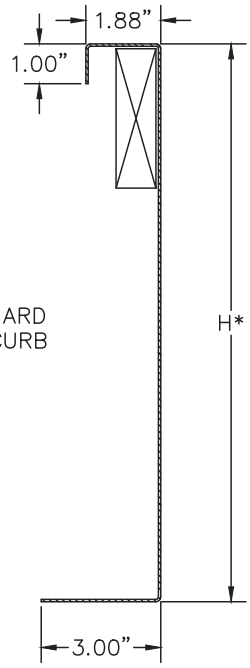

DATE	AHUBuilder	39M Central Station Air-Handler, Size: 03 - 110	REVISION
2024-12-30	v7.06	Curb, Baserail and Lifting Lug Detail	

THIS DOCUMENT IS THE PROPERTY OF CARRIER CORPORATION AND IS DELIVERED UPON THE EXPRESS CONDITION THAT THE CONTENTS WILL NOT BE DISCLOSED OR USED WITHOUT CARRIER CORPORATION'S WRITTEN CONSENT

SUBMISSION OF THESE DRAWINGS OR DOCUMENTS DOES NOT CONSTITUTE PART PERFORMANCE OR ACCEPTANCE OF CONTRACT

39MW

Carrier

THIS DOCUMENT IS THE PROPERTY OF CARRIER CORPORATION AND IS DELIVERED UPON THE EXPRESS CONDITION THAT THE CONTENTS WILL NOT BE DISCLOSED OR USED WITHOUT CARRIER CORPORATION'S WRITTEN CONSENT

SUBMISSION OF THESE DRAWINGS OR DOCUMENTS DOES NOT CONSTITUTE PART PERFORMANCE OR ACCEPTANCE OF CONTRACT

39M

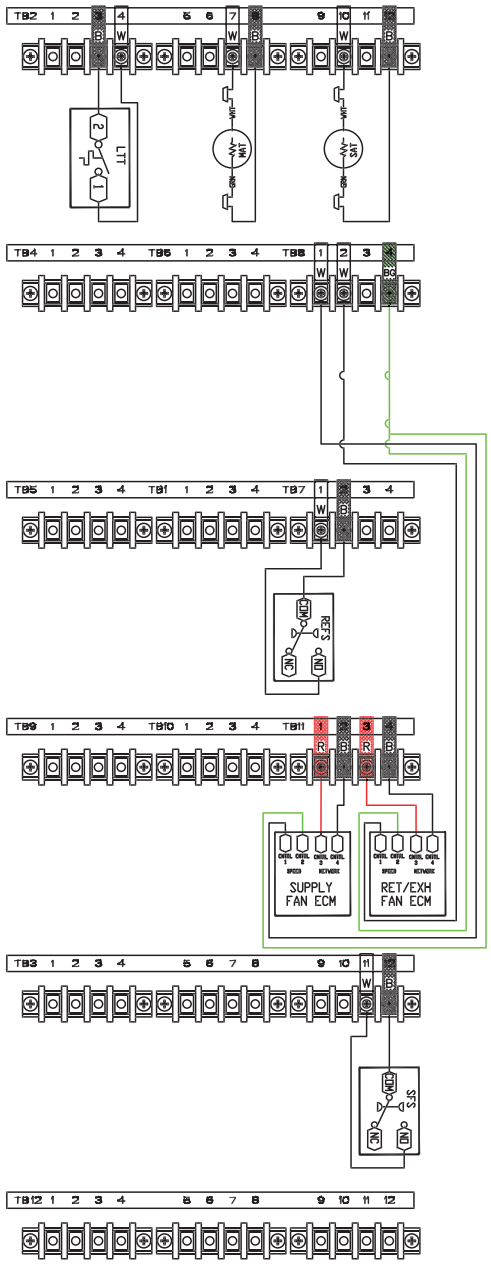

LEGEND:

	TERMINAL (MARKED)
	TERMINAL BLOCK
	SPLICE FIELD
———	WIRING FACTORY
– – –	WIRING FIELD CONTROL

A1/A2	24VAC CONTACTOR COIL
BG	BLACK OR GREEN
CCV	COOLING COIL VALVE*
COM	COMMON
EF	EXHAUST FAN
EHEAT	ELECTRIC HEATER
ERV	ENERGY RECOVERY WHEEL
EXD	EXHAUST AIR DAMPER
FBD	FACE & BYPASS DAMPER
FLTS	FILTER STATUS SWITCH
FLTS2	FILTER STATUS SWITCH 2
HCV	HEATING COIL VALVE*
HDT	HOT DECK TEMPERATURE
HUM	HUMIDIFIER ENABLE
LTT	LOW TEMPERATURE THERMOSTAT (FREEZSTAT)
MAD	MIXED AIR DAMPER
MAT	MIXED AIR TEMPERATURE
NC	NORMALLY CLOSED
NO	NORMALLY OPEN
OAD	OUTDOOR AIR DAMPER
PHEAT	PRE-HEAT
PHV	PRE-HEAT VALVE*
RAD	RETURN AIR DAMPER
RFFS	RETURN/EXHAUST FAN STATUS
RF	RETURN FAN
SAT	SUPPLY AIR TEMPERATURE
SCR	SILICON CONTROLLED RECTIFIER
SF	SUPPLY FAN
SFS	SUPPLY FAN STATUS
SI	SIGNAL IN
S/S	START/STOP
TB	TERMINAL BLOCK TERMINAL
VFD	VARIABLE FREQUENCY DRIVE
*	FIELD SUPPLIED

REVISION

39M Central Station Air Handler, Size: 03 - 110
Factory Wired Controller Wiring Diagram

AHUBuilder
v7.06

DATE
2024-12-30

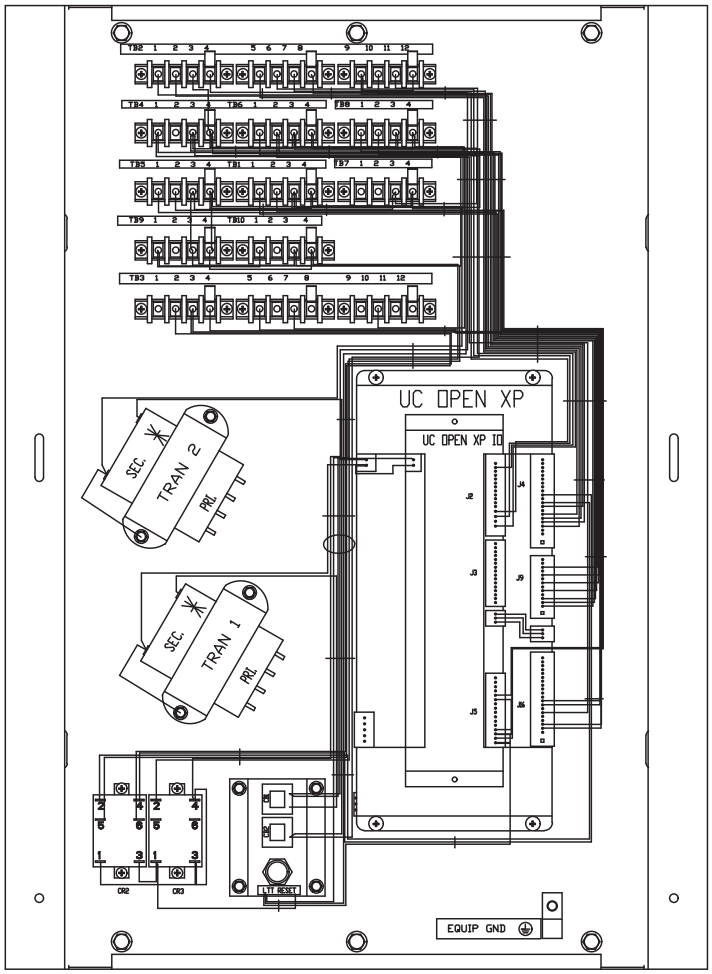

SIZE 03-06 (SHOWN)

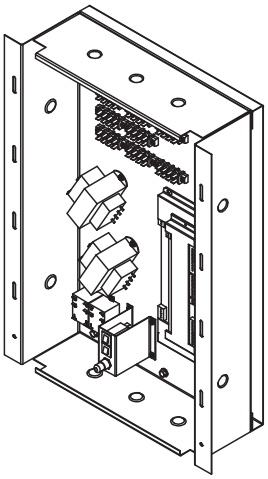

Component wiring for reference only.
When components are factory installed, wiring will be factory installed unless otherwise noted.
When components are provided by the factory for field installation, wiring is not included or installed.

THIS DOCUMENT IS THE PROPERTY OF CARRIER CORPORATION AND IS DELIVERED UPON THE EXPRESS CONDITION THAT THE CONTENTS WILL NOT BE DISCLOSED OR USED WITHOUT CARRIER CORPORATION'S WRITTEN CONSENT

SUBMISSION OF THESE DRAWINGS OR DOCUMENTS DOES NOT CONSTITUTE PART PERFORMANCE OR ACCEPTANCE OF CONTRACT

39M

DATE	AHUBuilder	39M Central Station Air-Handler, Size: 03 - 110	REVISION
2024-12-30	v7.06	Factory Wired Controller	

POWER WIRING DIAGRAM
ECM FAN 3 PHASE

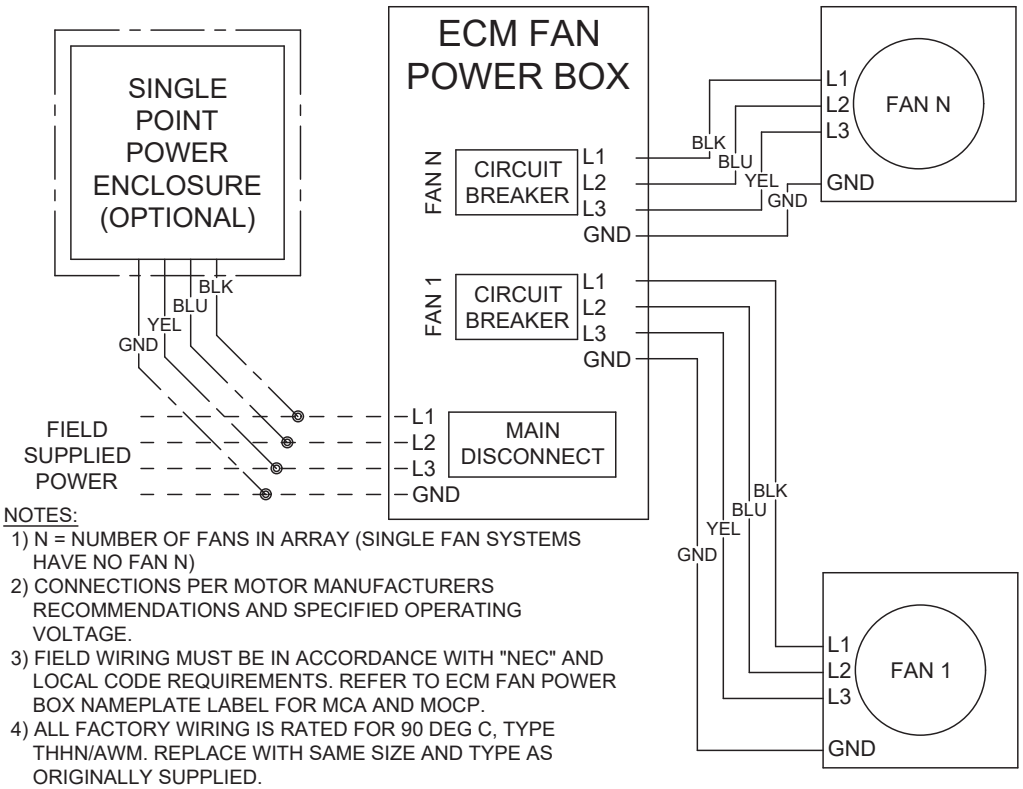

NOTES:

1) N = NUMBER OF FANS IN ARRAY (SINGLE FAN SYSTEMS HAVE NO FAN N)
2) CONNECTIONS PER MOTOR MANUFACTURERS RECOMMENDATIONS AND SPECIFIED OPERATING VOLTAGE.
3) FIELD WIRING MUST BE IN ACCORDANCE WITH "NEC" AND LOCAL CODE REQUIREMENTS. REFER TO ECM FAN POWER BOX NAMEPLATE LABEL FOR MCA AND MOCP.
4) ALL FACTORY WIRING IS RATED FOR 90 DEG C, TYPE THHN/AWM. REPLACE WITH SAME SIZE AND TYPE AS ORIGINALLY SUPPLIED.
5) USE COPPER CONDUCTOR SUPPLY WIRES ONLY

FACTORY WIRING
FIELD WIRING
OPTIONAL WIRING/EQUIPMENT
GND — GREEN, GREEN-YELLOW, OR BARE COPPER

39MA51010016 REV:B

Component wiring for reference only. When components are factory installed, wiring will be factory installed unless otherwise noted. When components are provided by the factory for field installation, wiring is not included or installed.

THIS DOCUMENT IS THE PROPERTY OF CARRIER CORPORATION AND IS DELIVERED UPON THE EXPRESS CONDITION THAT THE CONTENTS WILL NOT BE DISCLOSED OR USED WITHOUT CARRIER CORPORATION'S WRITTEN CONSENT

SUBMISSION OF THESE DRAWINGS OR DOCUMENTS DOES NOT CONSTITUTE PART PERFORMANCE OR ACCEPTANCE OF CONTRACT

39M

DATE	AHUBuilder	39M Central Station Air-Handler, Size: 03 - 110	REVISION
2024-12-30	v7.06	ECM Three Phase Wiring Detail	

CONTROLS WIRING DIAGRAM
ECM FAN, ZIEHL-ABEGG

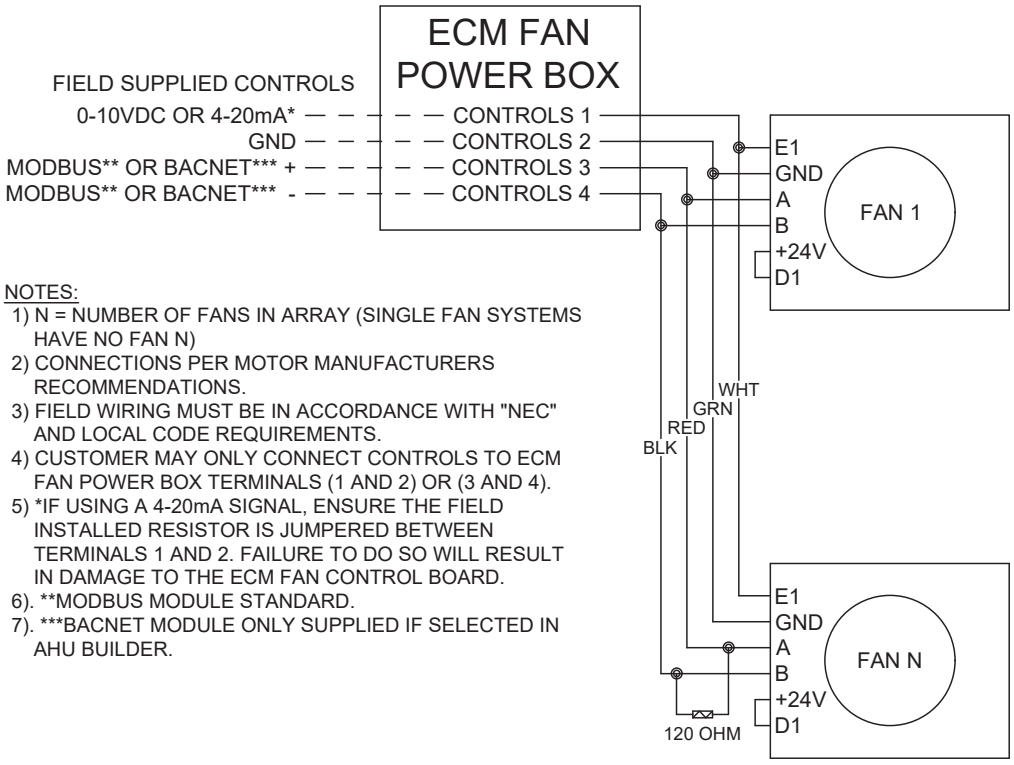

NOTES:

1) N = NUMBER OF FANS IN ARRAY (SINGLE FAN SYSTEMS HAVE NO FAN N)
2) CONNECTIONS PER MOTOR MANUFACTURERS RECOMMENDATIONS.
3) FIELD WIRING MUST BE IN ACCORDANCE WITH "NEC" AND LOCAL CODE REQUIREMENTS.
4) CUSTOMER MAY ONLY CONNECT CONTROLS TO ECM FAN POWER BOX TERMINALS (1 AND 2) OR (3 AND 4).
5) *IF USING A 4-20mA SIGNAL, ENSURE THE FIELD INSTALLED RESISTOR IS JUMPERED BETWEEN TERMINALS 1 AND 2. FAILURE TO DO SO WILL RESULT IN DAMAGE TO THE ECM FAN CONTROL BOARD.
6). **MODBUS MODULE STANDARD.
7). ***BACNET MODULE ONLY SUPPLIED IF SELECTED IN AHU BUILDER.

——————— FACTORY WIRING
— — — — — — FIELD WIRING

39MA51010019 REV:C

Component wiring for reference only. When components are factory installed, wiring will be factory installed unless otherwise noted. When components are provided by the factory for field installation, wiring is not included or installed.

THIS DOCUMENT IS THE PROPERTY OF CARRIER CORPORATION AND IS DELIVERED UPON THE EXPRESS CONDITION THAT THE CONTENTS WILL NOT BE DISCLOSED OR USED WITHOUT CARRIER CORPORATION'S WRITTEN CONSENT

SUBMISSION OF THESE DRAWINGS OR DOCUMENTS DOES NOT CONSTITUTE PART PERFORMANCE OR ACCEPTANCE OF CONTRACT

39M

DATE	AHUBuilder	39M Central Station Air-Handler, Size: 03 - 110	REVISION
2024-12-30	v7.06	ECM Controls Wiring Diagram - Ziehl-Abegg	

CONTROLS WIRING DIAGRAM
ECM FAN, EBM-PAPST

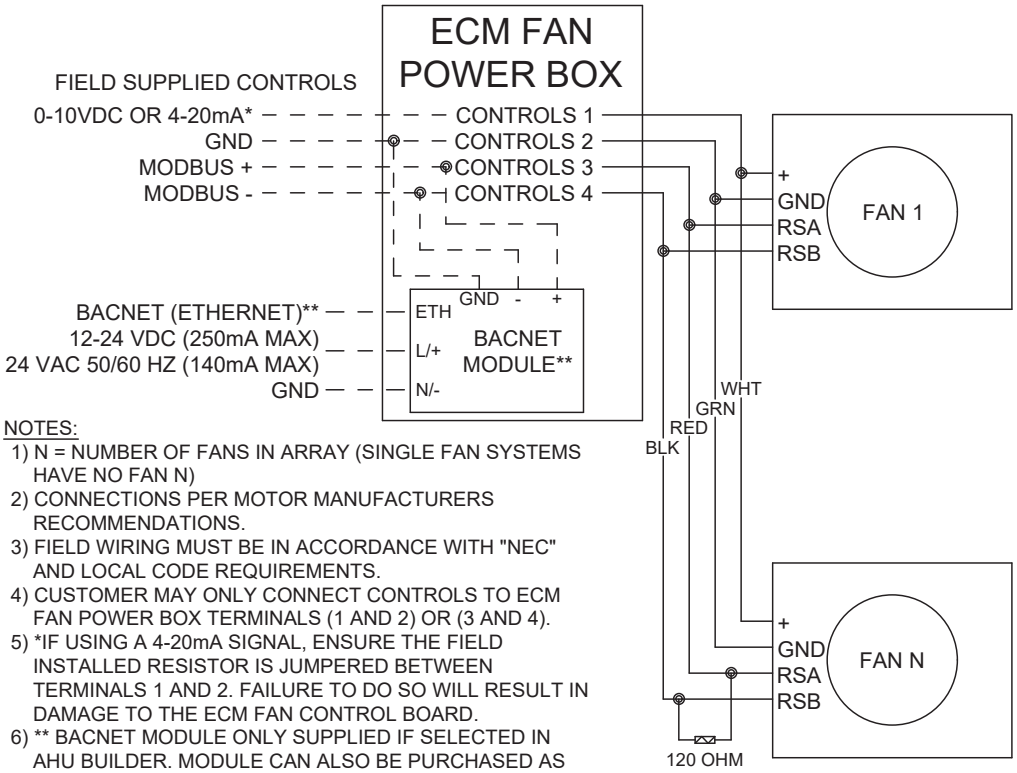

NOTES:

1) N = NUMBER OF FANS IN ARRAY (SINGLE FAN SYSTEMS HAVE NO FAN N)
2) CONNECTIONS PER MOTOR MANUFACTURERS RECOMMENDATIONS.
3) FIELD WIRING MUST BE IN ACCORDANCE WITH "NEC" AND LOCAL CODE REQUIREMENTS.
4) CUSTOMER MAY ONLY CONNECT CONTROLS TO ECM FAN POWER BOX TERMINALS (1 AND 2) OR (3 AND 4).
5) *IF USING A 4-20mA SIGNAL, ENSURE THE FIELD INSTALLED RESISTOR IS JUMPERED BETWEEN TERMINALS 1 AND 2. FAILURE TO DO SO WILL RESULT IN DAMAGE TO THE ECM FAN CONTROL BOARD.
6) ** BACNET MODULE ONLY SUPPLIED IF SELECTED IN AHU BUILDER. MODULE CAN ALSO BE PURCHASED AS AN ACCESSORY AND FIELD INSTALLED.

+ AIN 1 U / IO2, MOTOR SPECIFIC
FACTORY WIRING
FIELD WIRING

39MA51010018 REV:C

Component wiring for reference only. When components are factory installed, wiring will be factory installed unless otherwise noted. When components are provided by the factory for field installation, wiring is not included or installed.

THIS DOCUMENT IS THE PROPERTY OF CARRIER CORPORATION AND IS DELIVERED UPON THE EXPRESS CONDITION THAT THE CONTENTS WILL NOT BE DISCLOSED OR USED WITHOUT CARRIER CORPORATION'S WRITTEN CONSENT

SUBMISSION OF THESE DRAWINGS OR DOCUMENTS DOES NOT CONSTITUTE PART PERFORMANCE OR ACCEPTANCE OF CONTRACT

39M

DATE	AHUBuilder	39M Central Station Air-Handler, Size: 03 - 110	REVISION
2024-12-30	v7.06	ECM Controls Wiring Diagram - EBM Pabst	

Air Filter Submittal

Project: San Bernadino County Sherriff Station AHU
Unit Tag: AH 2

Carrier Part Number	31KB50412240824244
Kit Description	Filter Kit
Unit Airflow, CFM	19600
Filter Velocity, FPM	490
Filter Sizes and Quantities	Qty (4) 12in. x 24in., Qty (8) 24in. x 24in.

DFpro

Synthetic Cartridge Filter

DFpro rigid filters are designed to provide consistent high efficiency filtration in constant and variable air volume systems. Deep pleats are held firmly in place with plastic separators and expanded metal backing. Every edge of the media pack is glued inside the periphery of the frame to prevent air and dust bypass. The media and separators are 100% polypropylene to resist moisture damage, microbial growth, and puncture damage. Heavy gauge galvanized frame resists corrosion and maintains its structural integrity for extended months of service.

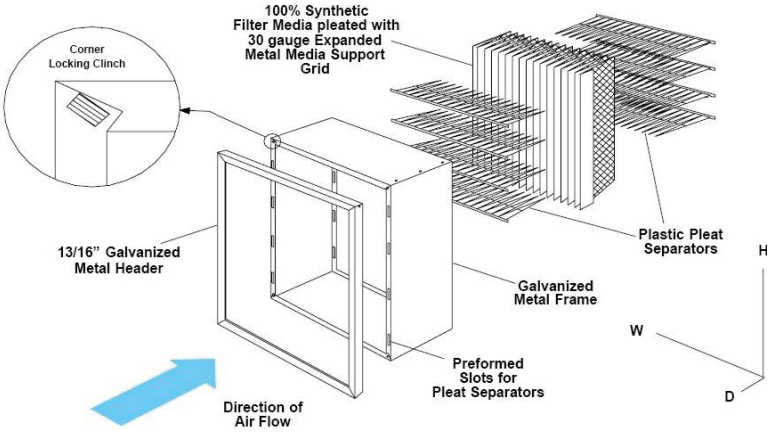

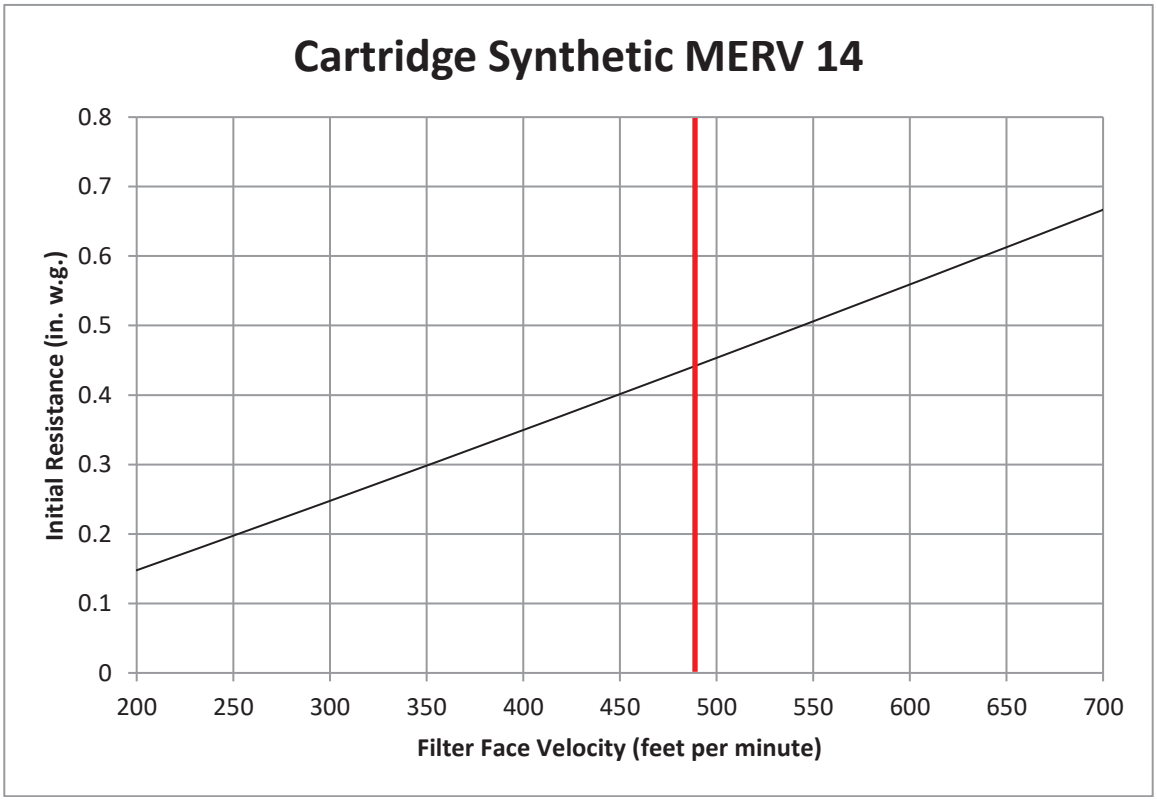

Air Filter Submittal

Project: San Bernadino County Sherriff Station AHU
Unit Tag: AH 2

Carrier Part Number	31K2C0412240824244
Kit Description	Filter Kit
Unit Airflow, CFM	19600
Filter Velocity, FPM	490
Filter Sizes and Quantities	Qty (4) 12in. x 24in., Qty (8) 24in. x 24in.

DFpro

MERV 13 Pleated Filter

The 100% synthetic graduated density media is continuously bonded to a 30 gauge galvanized, corrosion resistant, expanded metal support grid with an effective open area of 96%. The media is resistant to a wide range of chemicals, does not absorb moisture and will not support microbial growth.
The controlled pleat spacing maximizes surface area and dust holding capacity and is bonded to the enclosure frame to prevent dust bypass. The enclosure frame is constructed of high wet strength moisture resistant beverage board. The diagonal support members of the frame are bonded to the entering and exiting apexes of each pleat to prevent pleat collapse and filter bowing.

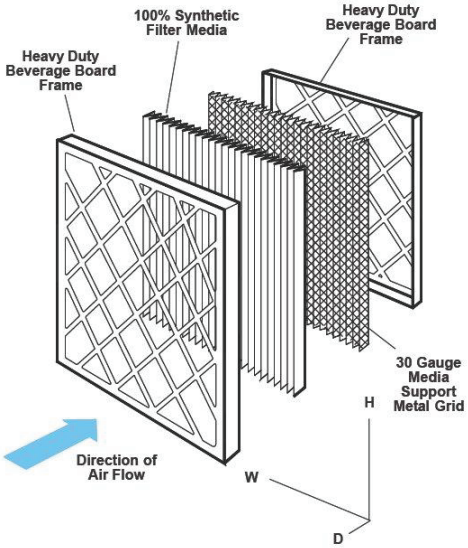

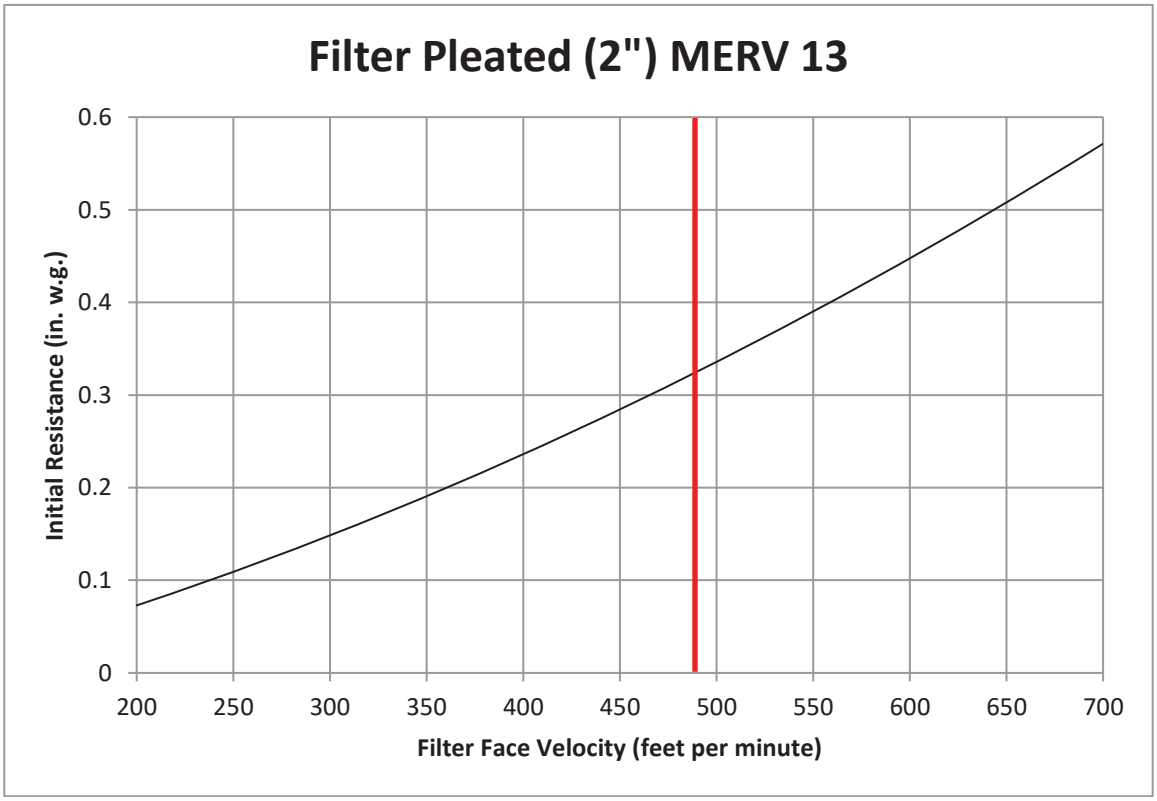

Unit Report AH 3

Project: San Bernadino County Sherriff Station AHU
Unit Tag: AH 3

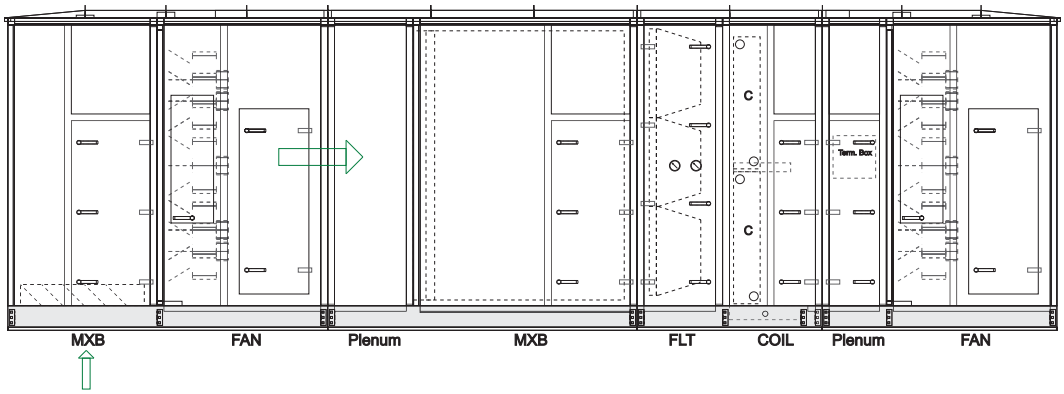

Unit Parameters

Aero Outdoor Air Handler
39MW Size 50W
Insulation: R-13 Double Wall Sealed Panel
Exterior Finish: Painted Exterior Panels
Interior Finish: Galvanized Interior Panels
Level II Thermal Break
6 inch tall Base Rail
Field Supplied Curb

Mixing Box

Damper: Bottom Premium Parallel
Door Right Side

Return Fan

Shipping Split After
Rear Inlet
Fan Sled
- Plenum Fan B PEBM0105
- Direct Drive Fans
- Fan Count 7
- 1977 fanRPM Class III
- Full Open Discharge
- ECM Control Box (Standard)
- Piezometer and Transducer (1 fan)
- Voltage Selected - 460/3/60
- Full Load Amps - 7.7 Each
- FLA/MCA/MOCP 53.9/55.8/60

Return/Exhaust Fan Status (DI)
Door Right Side

Plenum

Length 24 inches

Mixing Box

Shipping Split After
Damper: Left Side Premium Opposed
Damper: Rear Premium Parallel
Mixed Air Temperature Sensor (AI)
Door Right Side

Bag/Cartridge Filter

Bag/Cartridge Filter 6 - 12 IN. Side Loading
12" Cartridge w/ Header (Synthetic) MERV 14
Qty (3) 12in. x 24in.
Qty (12) 24in. x 24in.
Pre Filter : 2In. Flat Filter
2" Pleated MERV 13 Filter
Qty (3) 12in. x 24in.
Qty (12) 24in. x 24in.
Door Right Side
Minihelic Differential Pressure Gage 0-2" w.c. Right Side
Minihelic Differential Pressure Gage 0-2" w.c. Right Side

Chilled Water Coil and Plenum

Shipping Split After
Low Temperature Thermostat (DI)
304 Stainless Steel Drain Pan Right Side
Chilled Water 50.56 sq.ft 6 Row 8 FPI Full Circuit
Coil Connection Right Side
1/2 in. Tube Diameter
Fin Thickness: 0.0060
AL fins Galv. Casing
Steel Header
No Coating
Door Right Side

Control Plenum

Length 18 inches
Unprogrammed Carrier UC Open XP Controller Located in Control Plenum
Door Right Side

Draw-Thru Supply Fan

Rear Inlet
Fan Sled
Plenum Fan B PEBM0105
Direct Drive Fans
Fan Count 7
2411 fanRPM Class III
Field Supplied Discharge
ECM Control Box (Standard)
Piezometer and Transducer (1 fan)
Voltage Selected - 460/3/60
Full Load Amps - 7.7 Each
FLA/MCA/MOCP 53.9/55.8/60
Supply Fan Status (DI)
Supply Air Temperature Sensor (AI)
Door Right Side

Weights and Dimensions

(LxWxH in ft in) 24' 10" x 9' 11" x 7' 6" **
Operating 9467 LB **

Warranty Part Number(s) (NET PRICING)

39LMR-SU-FIRST Qty 1.0 First 39 Series Start-up

Configuration Notes

An Outdoor Plenum fan may not discharge through the roof of the unit.

If a bottom connection is required, use an Inlet Plenum Section.

An Outdoor Plenum fan may not discharge through the roof of the unit.

Discharge duct(s) must be gasketed and screwed directly to the discharge panel of the unit.

Warranty Part Number(s) (NET PRICING)

QTY 1.0 First 39 Series Start-up

** Weights and Dimensions are approximate. Weights include base unit weight, coils (wet & dry), fans and fan motors, and other components, but does not include filters, drives and skids. Approximate dimensions are provided primarily for shipping purposes, for exact dimensions, refer to submittal drawings. Shipping skids are not included.

All filter media efficiency ratings are for the filter media only.

Chilled Water Coil Performance Summary

Project: San Bernadino County Sherriff Station AHU
Unit Tag: AH 3

Cooling Application's Balance Criteria: Fluid Flow

Coil Model	**28MC**	
Number of Coils	**2**	
Row / FPI / Circ	**6 / 8 / FL**	
Fin Thickness	**.0060**	in
Fin Type	**Sine Wave**	
Face Area Type	**Large**	
Coil Face Area	**50.56**	sqft
Face Velocity	**454.9**	fpm
Fin-Casing Material	**Al-Galv.**	
Tube Diameter	**0.5**	in
Tube spacing: Stf x Str	**1.25 x 0.781**	in
Tube Wall Thickness	**0.016**	in
Actual Airflow	**23000**	CFM
Site Altitude	**0**	ft
Standard Airflow (adj. to std. dry atmosphere)	**22007**	SCFM
Total Cooling Capacity	**860.40**	MBH
Sensible Cooling Capacity	**720.75**	MBH
Fluid Flow Rate	**115.6**	gpm
Fluid Pressure Drop	**10.8**	ft wg
Fluid Velocity	**3.5**	ft/s
Entering Fluid Temperature	**43.00**	F
Leaving Fluid Temperature	**57.89**	F
Fluid Temperature Rise	**14.9**	F
Entering Air Dry Bulb	**85.30**	F
Entering Air Wet Bulb	**66.90**	F
Entering Air Enthalpy	**31.38**	BTU/lb
Leaving Air Dry Bulb	**54.97**	F
Leaving Air Wet Bulb	**54.24**	F
Leaving Air Enthalpy	**22.7**	BTU/lb
Air Friction	**0.57**	in wg
Brine	**FW**	
Brine Concentration	**0**	%
Fouling Factor	**0.0**	(hr-sqft-F)/BTU

NOTE: Certified in accordance with the AHRI Forced-Circulation Air-Cooling and Air-Heating Coils Certification Program which is based on AHRI Standard 410 within the Range of Standard Rating Conditions listed in Table 1 of the Standard. Certified units may be found in the AHRI Directory (www.ahridirectory.org).

LEGEND:
- Stf -- Tube spacing across coil face
- Str -- Tube spacing in direction of airflow

Unit Acoustics Summary

Project: San Bernadino County Sherriff Station AHU
Unit Tag: AH 3

Unit Acoustics Sound Power Level:

	Discharge	Inlet	Casing
63 Hz	81	76	73
125 Hz	82	78	75
250 Hz	92	88	85
500 Hz	93	87	84
1000 Hz	96	88	85
2000 Hz	94	85	81
4000 Hz	88	84	79
8000 Hz	82	74	71

Sound power levels are rated in accordance with AMCA 300.

Unit Acoustics A-weighted Sound Power Level:

	Discharge	Inlet	Casing
63 Hz	55	49	47
125 Hz	66	62	59
250 Hz	83	79	76
500 Hz	90	84	81
1000 Hz	96	88	85
2000 Hz	95	86	82
4000 Hz	89	85	80
8000 Hz	81	73	69

Sound power levels are rated in accordance with AMCA 300.

Sound contributed by Supply and Return Fans
Unit Acoustics PART-LOAD Sound Power Level:

	Discharge	Inlet	Casing
63 Hz	76	73	70
125 Hz	77	75	71
250 Hz	83	83	78
500 Hz	87	84	79
1000 Hz	89	84	79
2000 Hz	87	82	76
4000 Hz	81	80	75
8000 Hz	76	71	66

Sound power levels are rated in accordance with AMCA 300.

Unit Acoustics Summary

Project: San Bernadino County Sherriff Station AHU
Unit Tag: AH 3

Unit Acoustics PART-LOAD A-weighted Sound Power Level:

	Discharge	Inlet	Casing
63 Hz	**50**	**47**	**44**
125 Hz	**61**	**59**	**55**
250 Hz	**74**	**74**	**69**
500 Hz	**83**	**81**	**76**
1000 Hz	**89**	**84**	**79**
2000 Hz	**88**	**83**	**78**
4000 Hz	**82**	**81**	**76**
8000 Hz	**75**	**70**	**64**

Sound power levels are rated in accordance with AMCA 300.

Sound contributed by Supply and Return Fans

Return Fan Performance Summary

Project: San Bernadino County Sherriff Station AHU
Unit Tag: AH 3

Fan Model	**NC-39M5007HPEE**
Unit Size	**50W**
Fan Type **ECM**	
DIRECT DRIVE PLENUM (EBM-05) (Return)	
Fan Wheel Diameter	**15.7**
Fan Class	**III**
Static Efficiency (%)	**59**
Fan Application	**Return Fan**
Orientation	**Horizontal**
Actual Airflow, CFM	**19400**
Site Altitude, , ft	**0**
Total Upstream Static Losses, in wg	**1.31**
Number of Fans	**7**
Fan RPM / Max RPM	**1977/3700**
Each Fan BHP	**1.0**
Fan Total BHP	**6.8**
(n-1) Airflow, CFM	**32583**
(n-1) Redundancy (%)	**168**
Fan Electrical Power, kW	**6.5**
ECM Setting, VDC	**5.3**

Unit is outside of the scope of AHRI Standard 430/431.

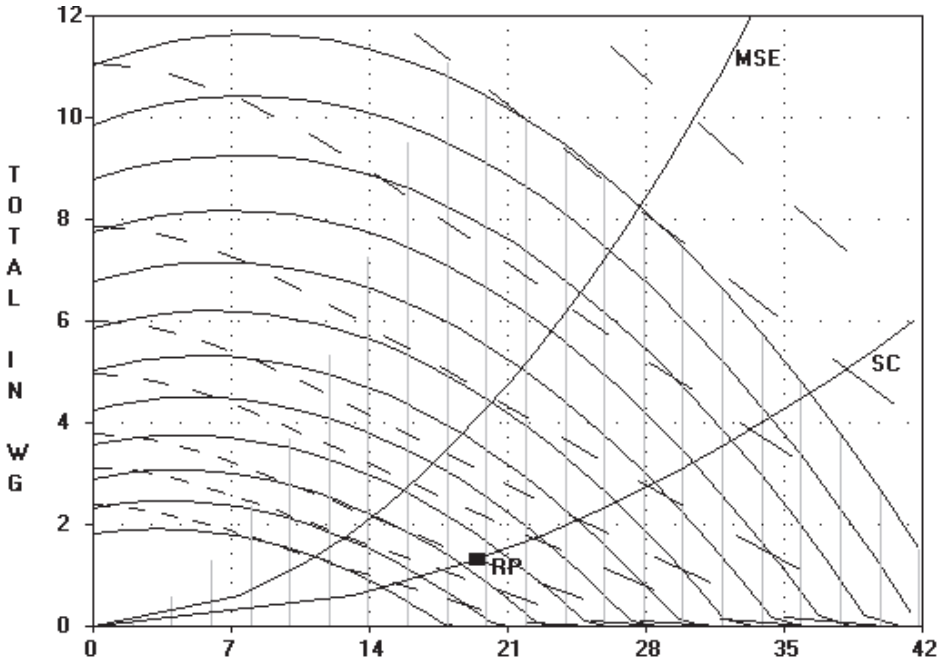

Legend:

\ - RPM \ - BHP MSE - Max. Static Eff. SC - System Curve RP - Rated Point

RPM = 1977 BHP = 6.8 CLASS III MAX. RPM = 3700

RPM's (x 100, L to R): 15. 17. 19. 21. 23. 25. 27. 29. 31. 33. 35. 37.

BHP's (L to R): 3.5 5.3 7 10.5 14 21 35 52.5 70

Supply Fan Performance Summary

Project: San Bernadino County Sherriff Station AHU
Unit Tag: AH 3

Fan Model	**39M5007HPEE-U**
Unit Size	**50W**
Fan Type	**ECM DIRECT DRIVE PLENUM (EBM-05)**
Fan Wheel Diameter	**15.7**
Fan Class	**III**
Fan Application	**Supply Fan**
Orientation	**Horizontal**
Actual Airflow, CFM	**19600**
Site Altitude, ft	**0**
Upstream Ext. Static, in wg	**0.00**
Downstream Ext. Static, in wg	**2.00**
Cooling Coil Static, in wg	**0.57**
Heating Coil Static, in wg	**0.00**
Total Accessory Static, in wg	**0.56**
Total Static Pressure, in wg	**3.13**
Calculated Fan RPM / Motor RPM	**2411 / 0**
Class III Max. RPM	**3700**
Static Efficiency (%)	**68**
Number of Fans	**7**
Each Fan BHP	**2.0**
Fan Total BHP	**14.3**
(n-1) Airflow, CFM	**27914**
(n-1) Redundancy (%)	**142**
Fan Electrical Power, kW	**12.8**
ECM Setting, VDC	**6.5**

AHRI CERTIFIED®
www.ahridirectory.org
Central Station Air-Handling Unit Supply Fans
AHRI Standard 430/431

Accessories:
(1) Flat Synthetic (2") MERV 13 [0.21]
(1) CARTRIDGE LONG/SHORT Synthetic MERV 14 [0.30]
(1) Side Mixing or Exhaust Box [0.05]

NOTE: Certified in accordance with the AHRI Central Station Air-Handling Unit Certification Program, which is based on AHRI Standards 430/431. Certified units may be found in the AHRI Directory at www.ahridirectory.org

Supply Fan Performance Summary

Project: San Bernadino County Sherriff Station AHU
Unit Tag: AH 3

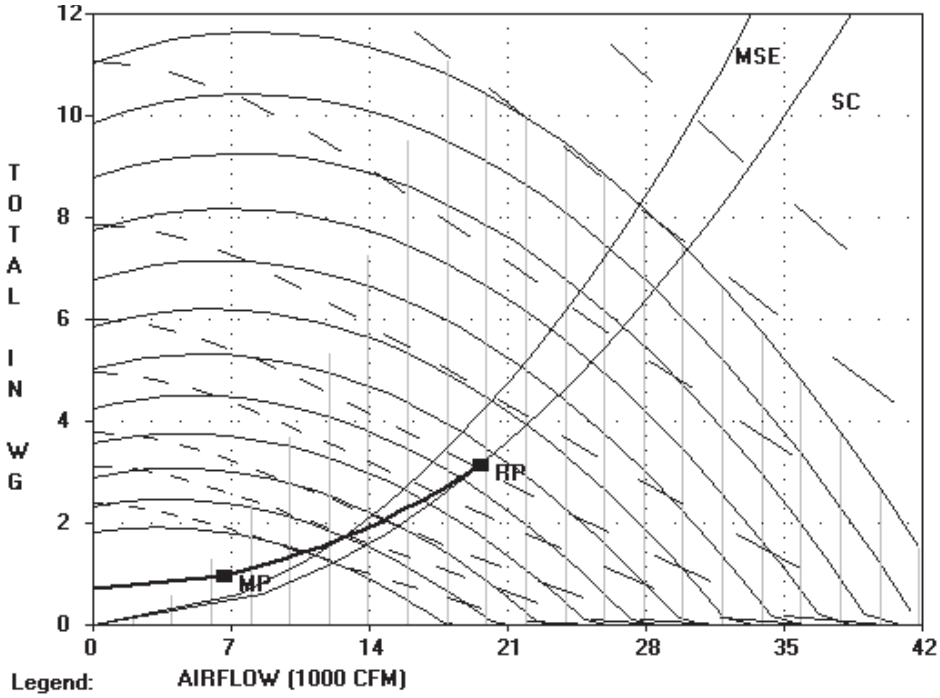

Legend:

- RPM - BHP MSE - Max. Static Eff. SC - System Curve RP - Rated Point

RPM = 2411 BHP = 14.3 CLASS III MAX. RPM = 3700

RPM's (x 100, L to R): 15. 17. 19. 21. 23. 25. 27. 29. 31. 33. 35. 37.

BHP's (L to R): 3.5 5.3 7 10.5 14 21 35 52.5 70

Sensor and Actuator Points List

Project: San Bernadino County Sherriff Station AHU
Unit Tag: AH 3

Name	AI	AO	DI	DO
Return/Exhaust Fan Status			X	
Mixed Air Temperature Sensor	X			
Low Temperature Thermostat			X	
Supply Fan Status			X	
Supply Air Temperature Sensor	X			

Carrier Part Number ..... OPN-UCXP
Manufacturer ..... Carrier

I-VU® UC Open XP

Unit Controller

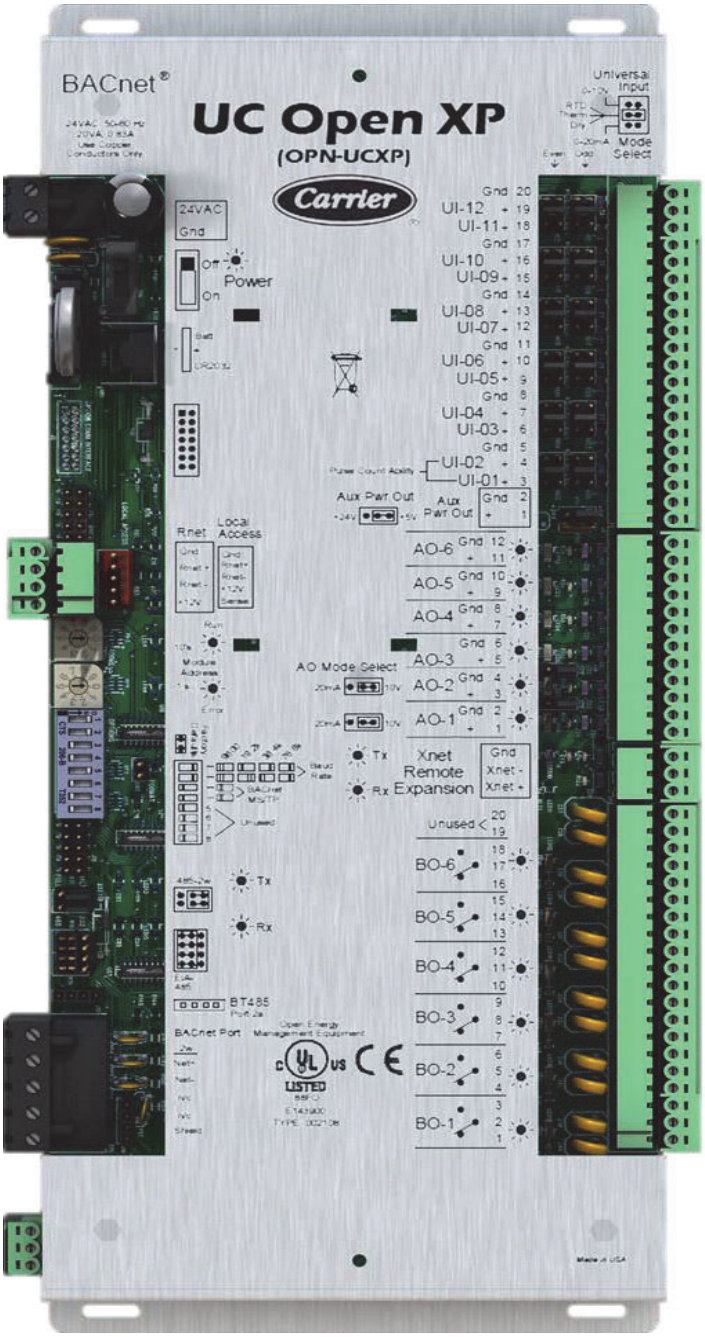

BACNet Support – Advanced application controller (B-AAC), as defined in BACNet 135-2001 Annex L
BACNet Communication Port – EIA-485 port for BACnet MS/TP communications (baud rate is DIP switch selectable)
Local Access Communication Port – For system start-up and troubleshooting (115.2 kbps)
Rnet Communication Port – For connecting Carrier communicating room sensors and Carrier's touchscreen user interface
Inputs – 12 inputs: Configurable for 0-10V, RTD/Thermistor/Dry contact, or 0-20mA. Inputs 1 and 2 may be used for pulse counting. All analog inputs have 12 bit A/D resolution.
Outputs – 6 binary outputs: Configured as dry contact, normally open or normally closed. All binary outputs must be powered from a Class 2 power source.
6 analog outputs: 1 and 2 are configurable for 0-10V or 0-20mA; 3-6 are 0-10V only. Analog outputs have 8 bit D/A resolution.
Protection – Incoming power and network connections are protected by non-replaceable internal solidstate polyswitches that reset themselves when the condition that causes a fault returns to normal. The power, network, input, and output connections are also protected against voltage transient and surge events.
Real Time Clock – Battery-backed real time clock keeps track of time in event of power failure.
Battery – 10-year Lithium CR2032 battery provides a minimum of 10,000 hours of trend data & time retention during power outages.
Status Indicators – LED status of power, running, and errors. LED indicators for transmit/receive for BACnet port and for each of the 12 outputs.
Controller Addressing – Rotary DIP switches set BACnet MS/TP MAC address of controller.
Listed By – UL-916, FCC Part 15-Subpart B- Class A, CE EN50082-1997
Operating/Storage Range – -24° to 140°F (-30° to 60°C), 10-90% relative humidity, non-condensing
Power Requirements – 24VAC +/- 10%, 50-60Hz
20VA power consumption
Single Class 2 source only, 100VA or less

Controller Expansion Board Submittal

Project: San Bernadino County Sherriff Station AHU
Unit Tag: AH 3

Carrier Part Number ..... OPN-UCXPIO
Manufacturer ..... Carrier

I-VU® UC Open XPIO

Unit Controller Expansion Board

Communication Ports – Xnet Remote Expansion port: For connecting to a UC XP Controller via the Xnet network.
Inputs – 8 binary inputs: Inputs 1-8 are binary only and support pulse counting up to 10 Hz.
8 analog inputs: Inputs 9-16 are universal inputs, jumper selectable between thermistor/dry contact and 0-5VDC. All analog inputs have 10 bit A/D resolution.
Outputs – 8 binary outputs: Configured as dry contact, normally open, and must be powered from a Class 2 power source.
Protection – Incoming power and network connections are protected by non-replaceable internal solidstate polyswitches that reset themselves when the condition that causes a fault returns to normal. The power, network, input, and output connections are also protected.
Status Indicators – LED status of power, outputs, running and errors.
Listed By – UL916 (Canadian Std. C22.2 No. 205-M 1983), CE, FCC Part15-Subpart B - Class A
Operating/Storage Range – -20°F to 140°F (-29° to 60°C), 10-90% relative humidity, non-condensing
Power Requirements – 24VAC +/- 10%, 50-60Hz
13VA power consumption
26VDC (25V min, 30V max)
Single Class 2 source only, 100VA or less

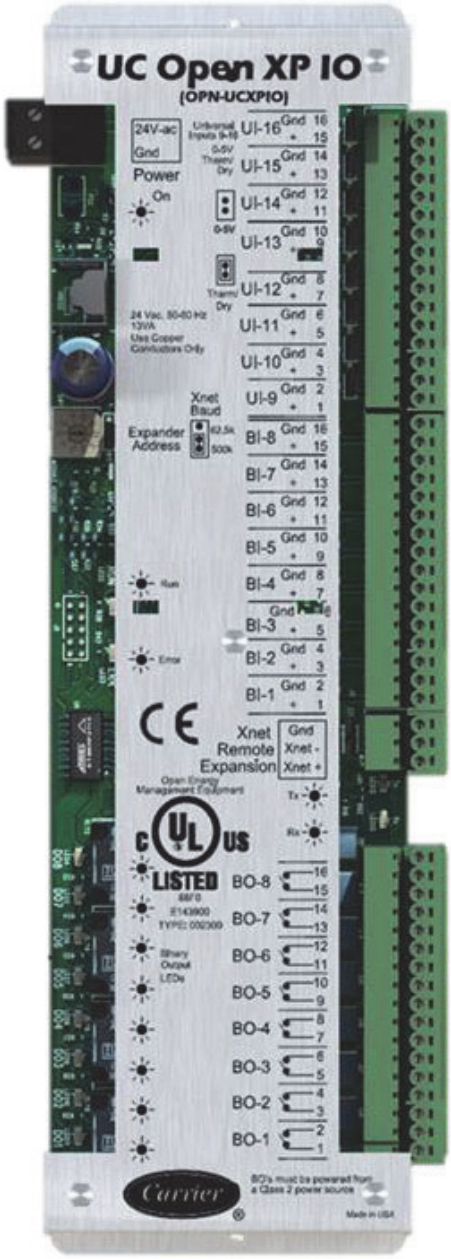

Supply Air Temperature (SAT) Sensor Submittal

Project: San Bernadino County Sherriff Station AHU
Unit Tag: AH 3

Carrier Part Number	33ZCSENSAT
Manufacturer	Automation Components, Inc.
Manufacturer Part Number	ACI/10K-CP-D4
Cable	1
Channel	UI-2
Terminal/Signal	TB2-10 / 10K Thermistor AI
Terminal/Signal	TB2-12 / Signal Ground

SAT

Supply Air Temperature Sensor

The SAT sensor consists of a thermistor encased within a stainless steel probe.

The thermistor has a temperature range of -245º to 185º F with a nominal resistance of 10,000 ohms at 77º F.

Wire Terminations

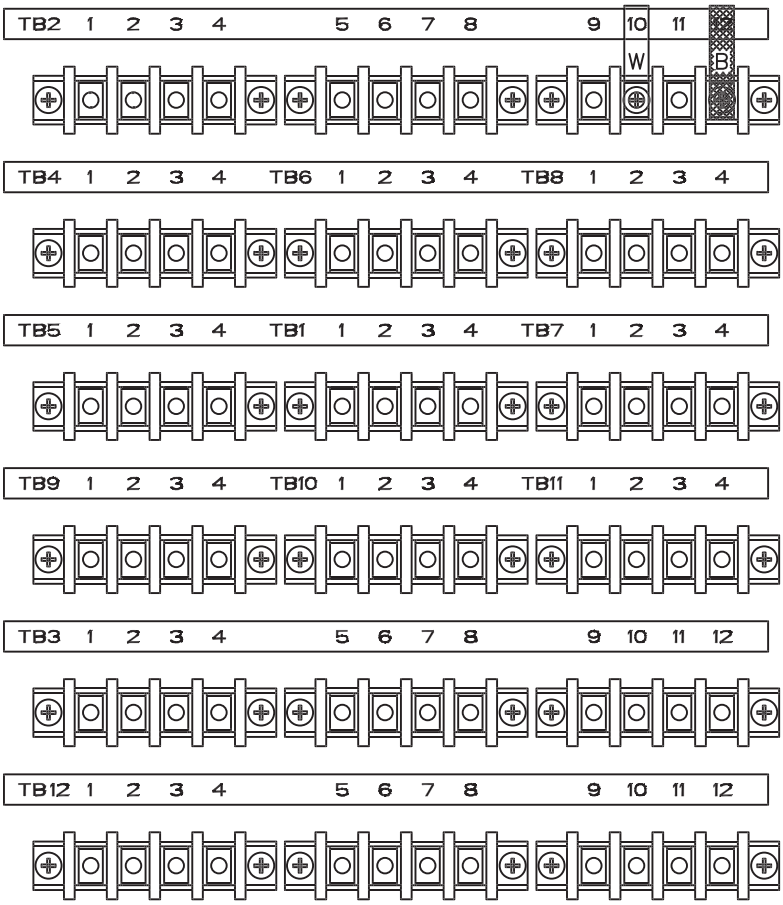

Mixed Air Temperature (MAT) Sensor Submittal

Project: San Bernadino County Sherriff Station AHU
Unit Tag: AH 3

Carrier Part Number HH79NZ041
Manufacturer ..... Automation Components, Inc.
Manufacturer Part Number ACI/10K-CP-A24
Cable 4
Channel UI-3
Terminal/Signal ..... TB2-7 / 10K Thermistor AI
Terminal/Signal ..... TB2-8 / Signal Ground

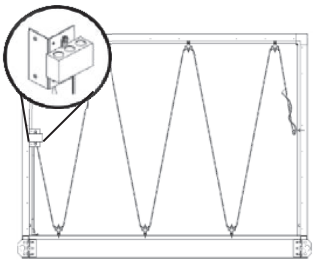

MAT

Mixed Air Temperature Sensor

The MAT sensor consists of multiple, evenly spaced thermistors encased within a flexible copper tube.

Mechanical and electrical averaging is used to achieve the temperature measurement over the entire element length.

The MAT sensor has a range of -40º to 185º F with a nominal resistance of 10,000 ohms at 77º F.

The sensor is located in the last mixing box in the airflow.

Wire Terminations

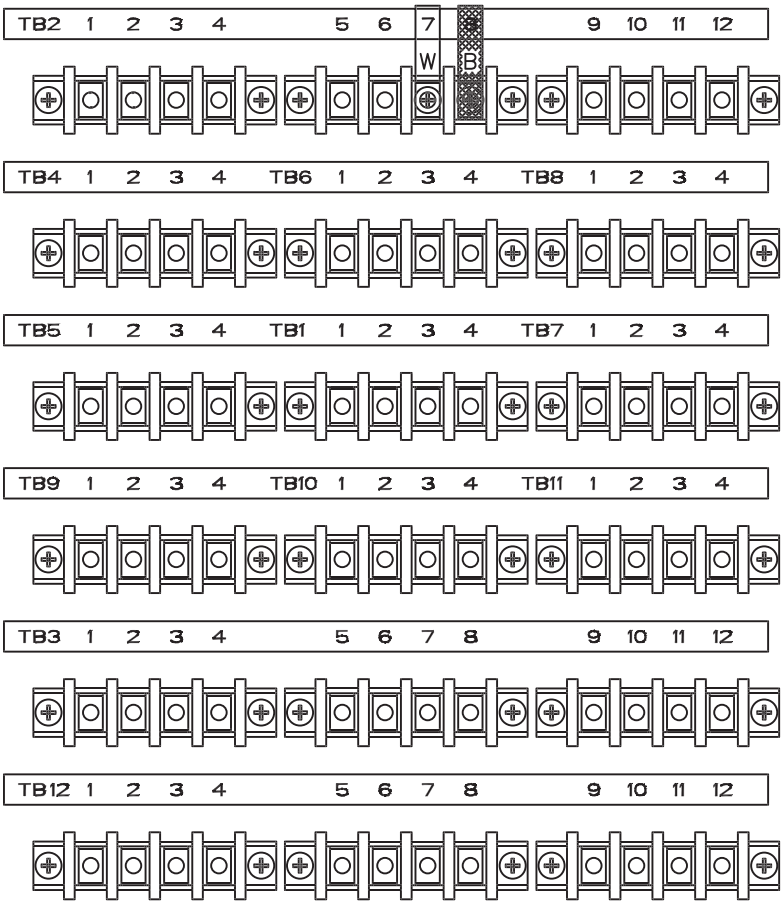

Low Temperature Thermostat Submittal

Project: San Bernadino County Sherriff Station AHU
Unit Tag: AH 3

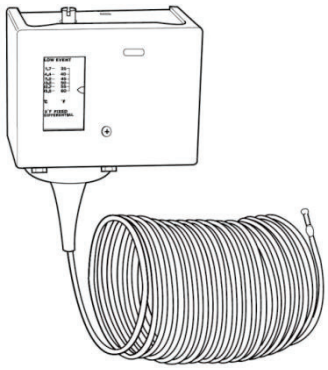

Carrier Part Number HH22BZ001
Manufacturer ..... Schneider Electric
Manufacturer Part Number TC-5231-702
Cable 2
Channel UI-5
Terminal/Signal ..... TB2-4 / Dry Contact DI
Terminal/Signal ..... TB2-3 / Signal Ground

LTT

Low Temperature Thermostat

20 ft. element senses temperature over a large area. Control responds to the coldest one-foot section of the sensor.

Adjustable setpoint from 35º F to 60º F with 5º F fixed differential.

Rated for use at 17 full load amps (120/208/240 Vac), 24 non-inductive amps (120/208/240 Vac), and 16 non-inductive amps (24 Vac).

Enclosure rating: NEMA Type 1.

Approvals: UL & CSA.

Wire Terminations

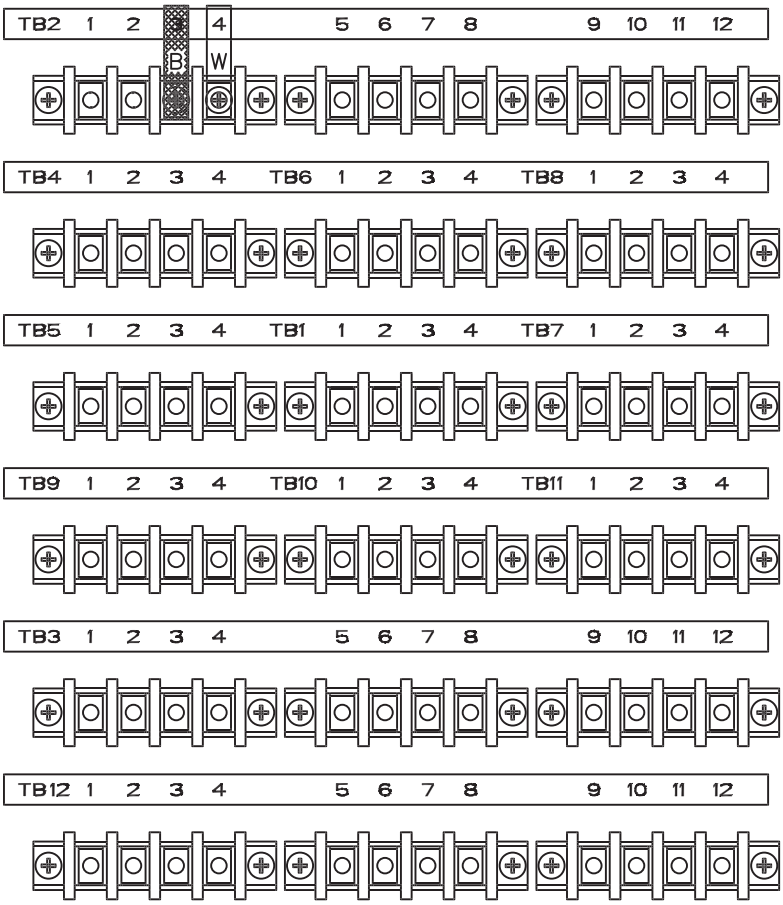

Supply Fan Status Sensor Submittal

Project: San Bernadino County Sherriff Station AHU
Unit Tag: AH 3

Carrier Part Number 39MA51000021
Manufacturer ..... Automation Components, Inc.
Manufacturer Part Number ..... A/MCS-A
Cable 21
Channel UI-6
Terminal/Signal ..... TB3-11 / Dry Contact DI
Terminal/Signal ..... TB3-12 / Signal Ground

SFS

Supply Fan Status Sensor

The A/MCS-A is a normally open (N/O) solid state adjustable current switch.

Outputs are non-polarity sensitive, N/O solid-state contacts for switching both AC and DC circuits up to 36 volts.

Unit includes two Status LED indicators, which signal three states:

1. Tripped on
2. Current present but below trip point
3. Current off or below the low end of the adjustable trip point range.

Wire Terminations

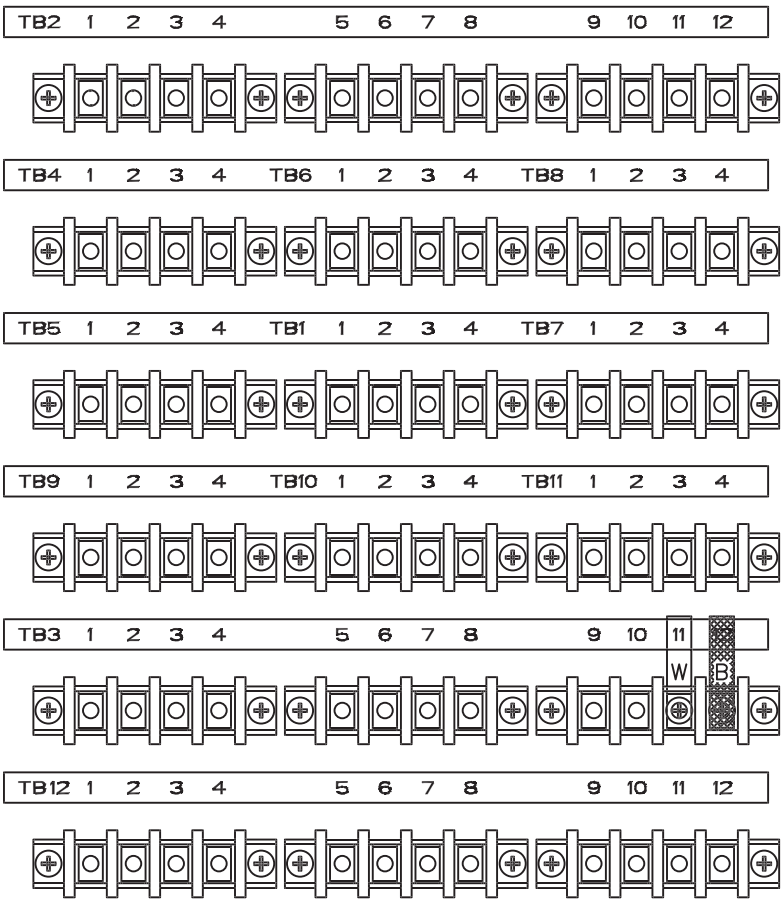

Return/Exhaust Fan Status Sensor Submittal

Project: San Bernadino County Sherriff Station AHU
Unit Tag: AH 3

Carrier Part Number 39MA51000021
Manufacturer ..... Automation Components, Inc.
Manufacturer Part Number ..... A/MCS-A
Cable 19
Channel EXIN-1
Terminal/Signal ..... TB7-1 / Dry Contact DI
Terminal/Signal ..... TB7-2 / Signal Ground

RFS/EFS

Return/Exhaust Fan Status Sensor

The A/MCS-A is a normally open (N/O) solid state adjustable current switch.

Outputs are non-polarity sensitive, N/O solid-state contacts for switching both AC and DC circuits up to 36 volts.

Unit includes two Status LED indicators, which signal three states:

1. Tripped on
2. Current present but below trip point
3. Current off or below the low end of the adjustable trip point range.

Wire Terminations

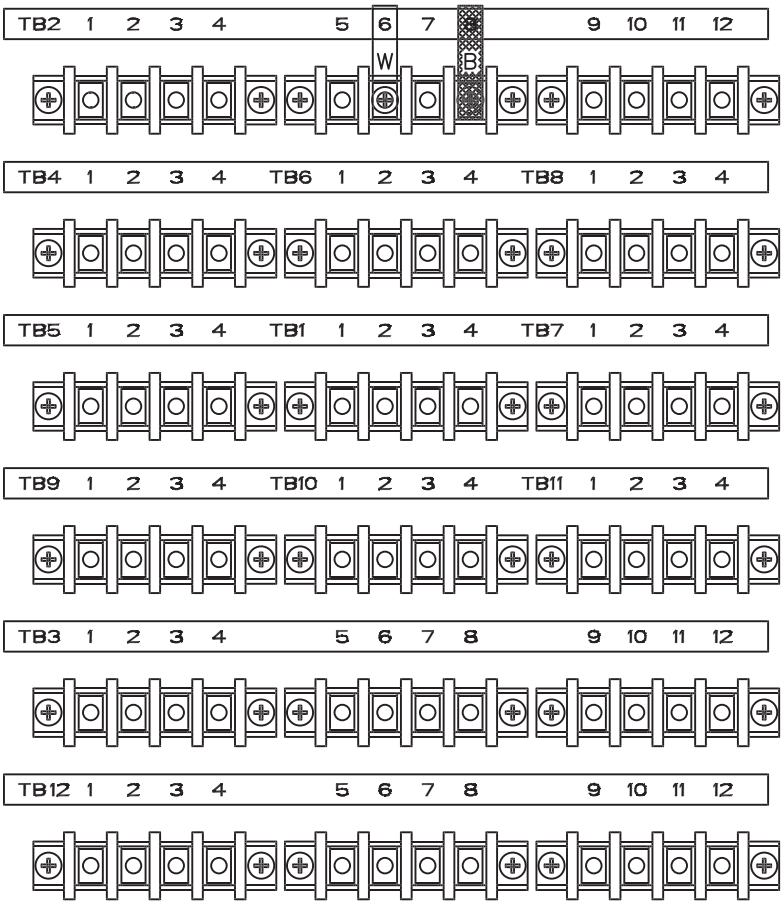

Unit width: 9'-11" plus lifting lugs
Return Fan
0
Bag/Carriage Filter 6 - 12 IN. inside Loading
Qty p412in. x 2(in.
Qty p1242(in. x 2(in.
Pre Filter : 2In. Flat Filter
Qty p412in. x 2(in.

Qty p1242(in. x 2(in.
Chilled Water 6 Row 8 FPI Full Circuit Qty. 24
Draw-Thru Inlet Fan
0
Operating weight: 9(67.0 lbs.
Ut stream Corner Weight each 2179.0 lbs.
Downstream Corner Weight each 2555.0 lbs.

Point	Straight Length	Weight lbs.
Point 14	7'-7 1/16"	2572
Point 24	7'-S 1/16"	1901
Point S4	('-(1/16"	2805
Point (4	5'-6 1/16"	2190

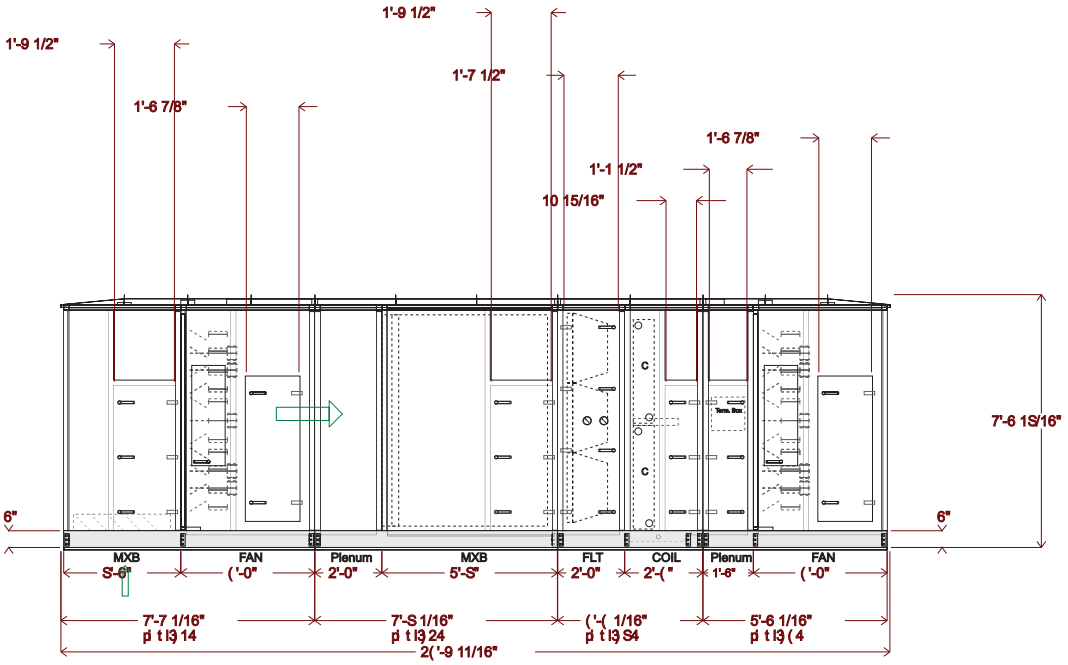

DATE	AHUBuilder	S9M Central Station Air-Handler, Size 50W	REVISION
12/S0/202(	v7.06	Indian Bernardino County Irrigation Station AHU: AH S Assembly Drawing	Inside View

Carrier

THIS DOCUMENT IS THE PROPERTY OF CARRIER CORPORATION AND IS DELIVERED UPON THE EXPRESS CONDITION THAT THE CONTENTS WILL NOT BE DISCLOSED OR USED WITHOUT CARRIER CORPORATION'S WRITTEN CONSENT

SUBMISSION OF THESE DRAWINGS OR DOCUMENTS DOES NOT CONSTITUTE PART PERFORMANCE OR ACCEPTANCE OF CONTRACT

S9MW

Unit viewed from right side of side elevation view.
Unit length: 2' -9 11/16"
Return Fan
0
Bag/Cartridge Filter 6 - 12 IN. in Side Loading
Qty pS4123in. x 2' 3in.
Qty p1242' 3in. x 2' 3in.
Pre Filter : 2In. Flat Filter
Qty pS4123in. x 2' 3in.

Qty p1242' 3in. x 2' 3in.
Chilled Water 6 Row 8 FPI Full Circuit Qty. 24
Draw-Thru Int ly Fan
0
Operating weight: 9' 67.0 lbs.
Upstream Corner Weight each 2179.0 lbs.
Downstream Corner Weight each 2555.0 lbs.

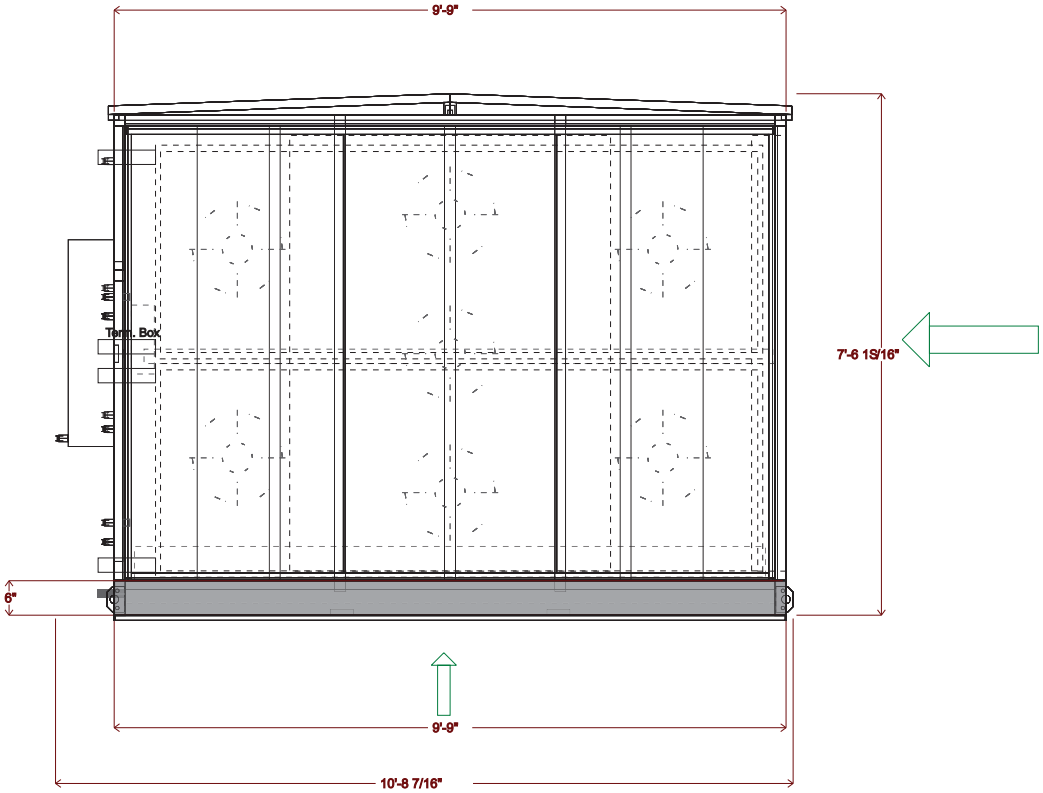

DATE	AHUBuilder	S9M Central Station Air-Handler, Size 50W	REVISION
12/30/2017	v7.06	Indian Bernardino County Sheriff Station AHU: AH S Assembly Drawing	End View

Carrier

THIS DOCUMENT IS THE PROPERTY OF CARRIER CORPORATION AND IS DELIVERED UPON THE EXPRESS CONDITION THAT THE CONTENTS WILL NOT BE DISCLOSED OR USED WITHOUT CARRIER CORPORATION'S WRITTEN CONSENT

SUBMISSION OF THESE DRAWINGS OR DOCUMENTS DOES NOT CONSTITUTE PART PERFORMANCE OR ACCEPTANCE OF CONTRACT

S9MW

Unit height: 7'-6 5/16"
Return Fan
0
Bag/Cartridge Filter 6 - 12 IN. inside Loading
Qty p54123in. x 2(3in.
Qty p1242(3in. x 2(3in.
Pre Filter : 2In. Flat Filter
Qty p54123in. x 2(3in.

Qty p1242(3in. x 2(3in.
Chilled Water 6 Row 8 FPI Full Circuit Qty. 24
Draw-Thru Int ly Fan
0
Operating weight): 9(67.0 lbs.
Upstream Corner Weight each4 2179.0 lbs.
Downstream Corner Weight each4 2555.0 lbs.

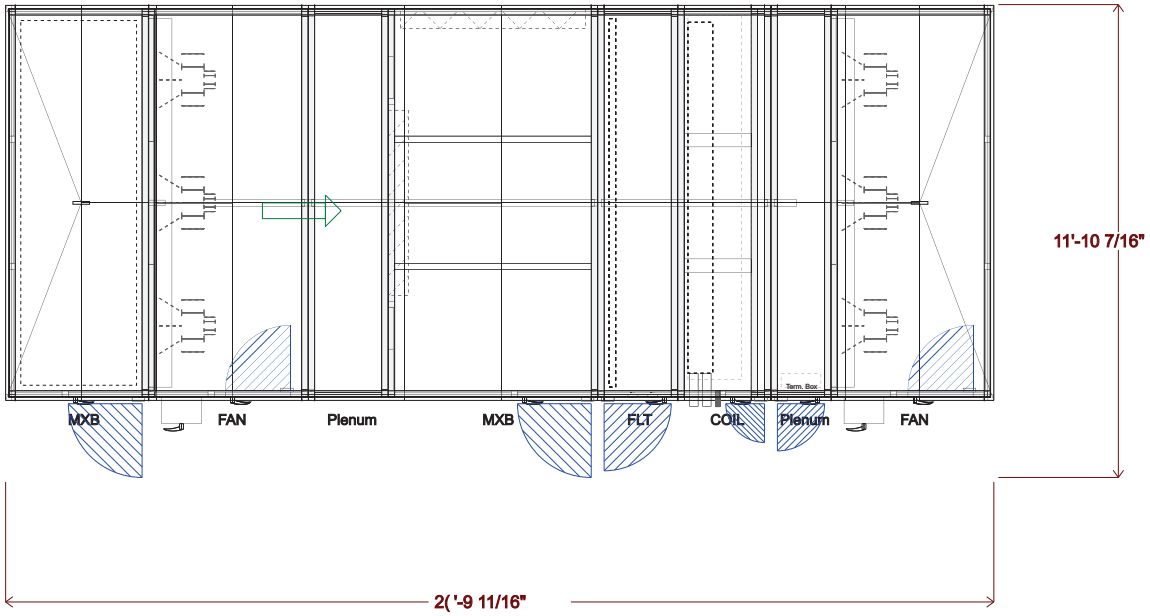

DATE	AHUBuilder	S9M Central Station Air-Handler, Size 50W	REVISION
12/S0/202(	v7.06	Indian Bernadino County Irrigation Station AHU: AHS Assembly Drawing	Top View

THIS DOCUMENT IS THE PROPERTY OF CARRIER CORPORATION AND IS DELIVERED UPON THE EXPRESS CONDITION THAT THE CONTENTS WILL NOT BE DISCLOSED OR USED WITHOUT CARRIER CORPORATION'S WRITTEN CONSENT

SUBMISSION OF THESE DRAWINGS OR DOCUMENTS DOES NOT CONSTITUTE PART PERFORMANCE OR ACCEPTANCE OF CONTRACT

S9MW

Ch3led Wa)er 6 Row 8 FPI Full C3cu3 m)y. 24

P3 e	x	y	d3ame)er	Usage
A	17'-9 1/2"	S 1S/16"	1 1/2"	Dra3nPan
B	17'-2 5/16"	S'-5 11/16"	2 1/2"	CW Ou)le)
C	17'-6 1/("	8 11/16"	2 1/2"	CW Inle)
D	17'-2 5/16"	6'-7 S/("	2 1/2"	CW Ou)le)
E	17'-6 1/("	S'-10 S/("	2 1/2"	CW Inle)

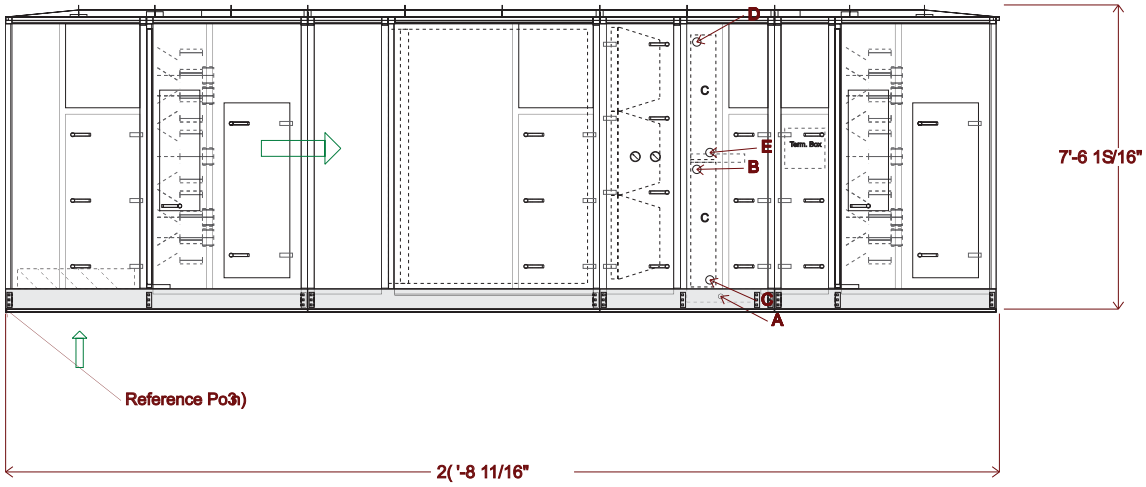

DATE	AHUBu3der	S9M Cen)ral i)a)3on A3-Handler, i 3ze 50W	REVIi ION
12/S0/202(	v7.06	i an Bernad3no Coun)y i herr3f i)a)3on AHU: AH S Assembly Draw3ng	i 3le V3ew

Carrier

THII DOCUMENT II THE PROPERTY OF CARRIER CORPORATION AND II DELIVERED UPON THE EXPREI I CONDITION THAT THE CONTENTI WILL NOT BE DII CLOI ED OR UI ED WITHOUT CARRIER CORPORATIONI WRITTEN CONI ENT

I UBMI I ION OF THEI E DRAWINGI OR DOCUMENTI DOEI NOT CONI TITUTE PART PERFORMANCE OR ACCEPTANCE OF CONTRACT

S9MW

THI DOCUMENT I THE PROPERTY OF CARRIER CORPORATION AND I DELIVERED UPON THE EXPRE I CONDITION THAT THE CONTENT WILL NOT BE DI CLOI ED OR U ED WITHOUT CARRIER CORPORATION' WRITTEN CONI ENT

I UBMI I ION OF THEI E DRAWINGI OR DOCUMENT DOE NOT CONI TITUTE PART PERFORMANCE OR ACCEPTANCE OF CONTRACT

S9MW

DATE	AHUBu3der	S9M Cen)ral i)a)3on A3-Handler, i 3ze 50W	REVIi ION
12/S0/202(	v7.06	i an Bernad3no Coun)y i herr3f i)a)3on AHU: AH S M3x3ng Box	Tot V3ew

Unit viewed from right side of side elevation view.
Return Fan
0

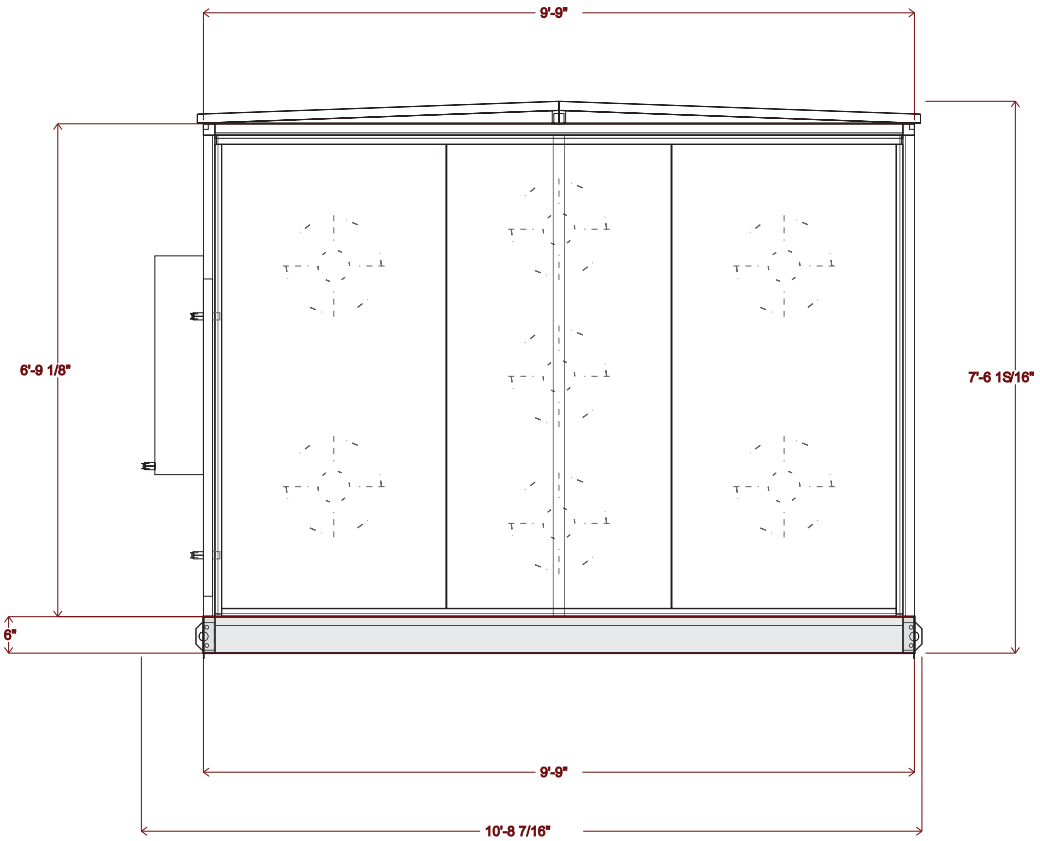

THIS DOCUMENT IS THE PROPERTY OF CARRIER CORPORATION AND IS DELIVERED UPON THE EXPRESS CONDITION THAT THE CONTENTS WILL NOT BE DISCLOSED OR USED WITHOUT CARRIER CORPORATION'S WRITTEN CONSENT

SUBMISSION OF THESE DRAWINGS OR DOCUMENTS DOES NOT CONSTITUTE PART PERFORMANCE OR ACCEPTANCE OF CONTRACT

S9MW

DATE	AHUBuilder	S9M Central Station AirHandler, Size 50W	REVISION
12/30/2016	v7.06	San Bernardino County Sheriff Station AHU: AH S Return Fan	End View

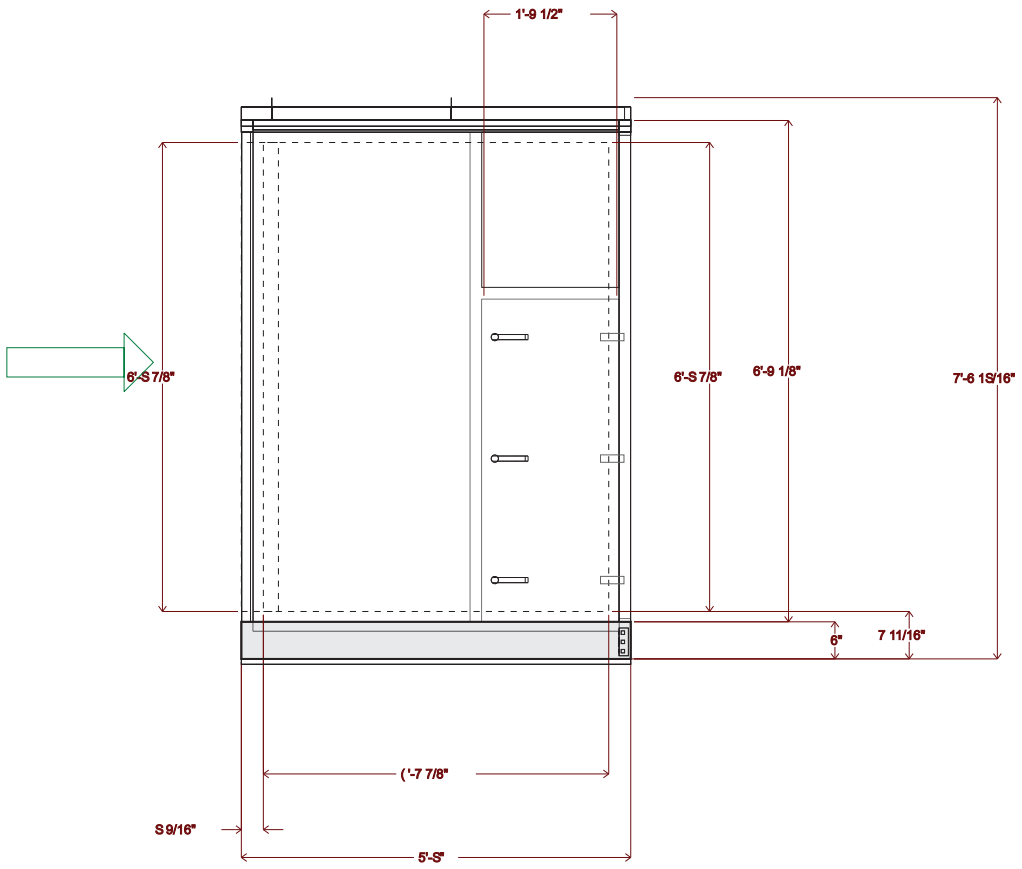

DATE	AHUBu3der	S9M Cen)ral i)a)3on A3-Handler, i 3ze 50W	REVIi ION
12/S0/202(	v7.06	i an Bernad3no Coun)y i herr3F i)a)3on AHU: AH S M3x3ng Box	i 3le V3ew

Carrier

THI DOCUMENT II THE PROPERTY OF CARRIER CORPORATION AND II DELIVERED UPON THE EXPREI I CONDITION THAT THE CONTENTI WILL NOT BE DII CLOI ED OR UI ED WITHOUT CARRIER CORPORATIONI WRITTEN CONI ENT

I UBMI I ION OF THEI E DRAWINGI OR DOCUMENTI DOEI NOT CONI TITUTE PART PERFORMANCE OR ACCEPTANCE OF CONTRACT

S9MW

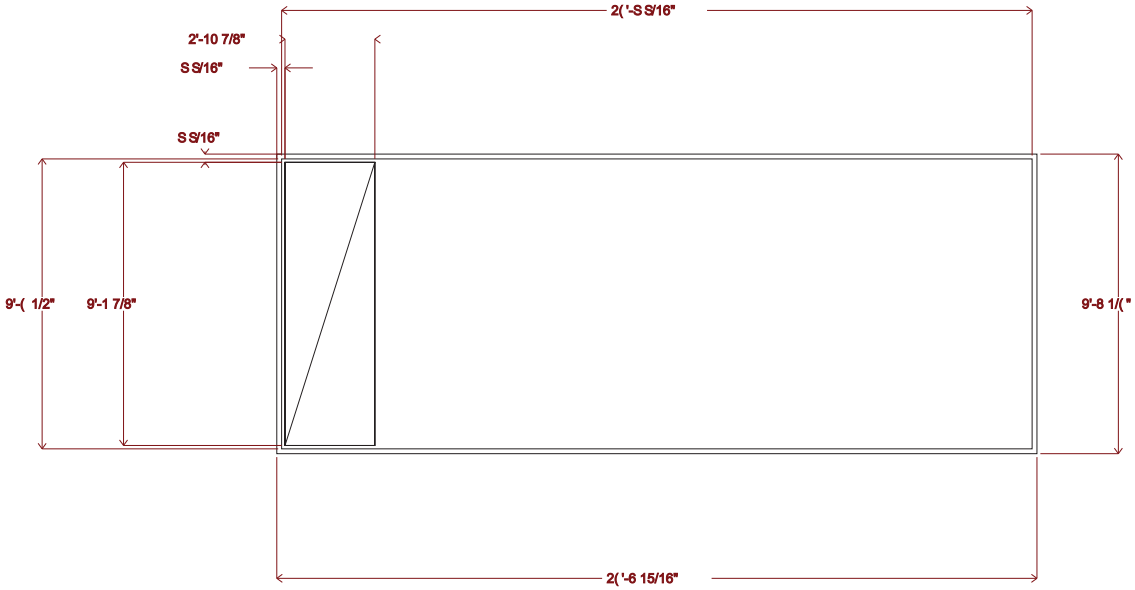

DATE	AHUBu3der	S9M Cen)ral i)a)3on A3-Handler, i 3ze 50W	REVIi ION
12/S0/202(	v7.06	i an Bernad3no Coun)y i herr3f i)a)3on AHU: AH S Ahu Curb	Tot V3ew

S9MW

THI DOCUMENT I THE PROPERTY OF CARRIER CORPORATION AND I DELIVERED UPON THE EXPRE I CONDITION THAT THE CONTENT WILL NOT BE DI CLOI ED OR UI ED WITHOUT CARRIER CORPORATION' WRITTEN CONI ENT

I UBMI I ION OF THEI E DRAWINGI OR DOCUMENT DOE NOT CONI TITUTE PART PERFORMANCE OR ACCEPTANCE OF CONTRACT

DRAW-THRU

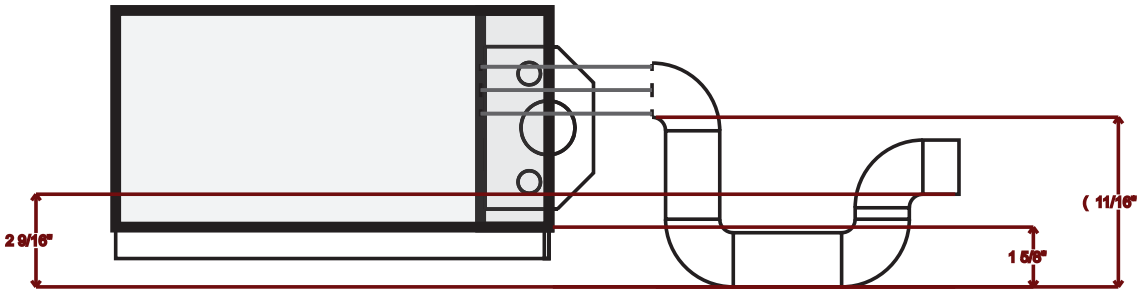

DATE	AHUBu3der	S9M Cen)ral I)a)3on A3-Handler, I 3ze 50W I an Bernad3no Coun)y I herr3 I)a)3on AHU: AH S Condensa)e Trat D3nens3ons	REVII ION
12/S0/202(	v7.06		End V3w

S9MW

I USMI I ION OF THEI E DRAWINGI OR DOCUMENTI DOEI NOT CON TITUTE PART PERFORMANCE OR/ACCEPTANCE OF CONTRACT

THI DOCUMENT I THE PROPERTY OF CARRIER CORPORATION AND I DELIVERED UPON THE EXPRESI I CONDITION THAT THE CONTENTI WILL NOT BE DI CLOI ED OR U ED WITHOUT CARRIER CORPORATION'I WRITTEN CONI ENT

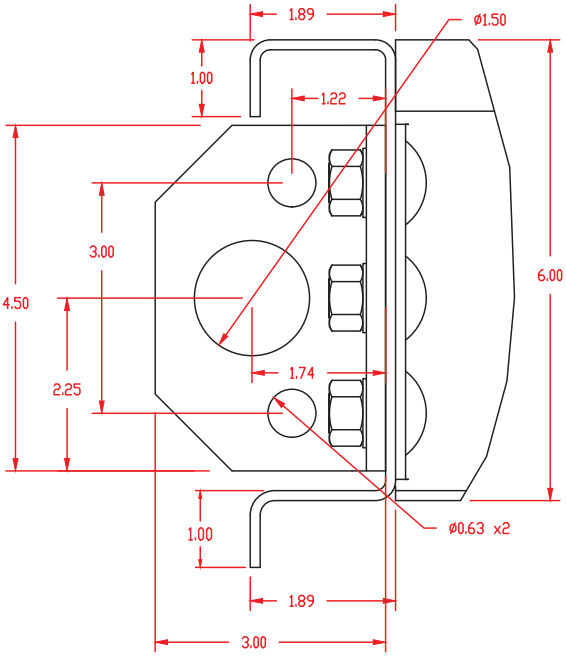

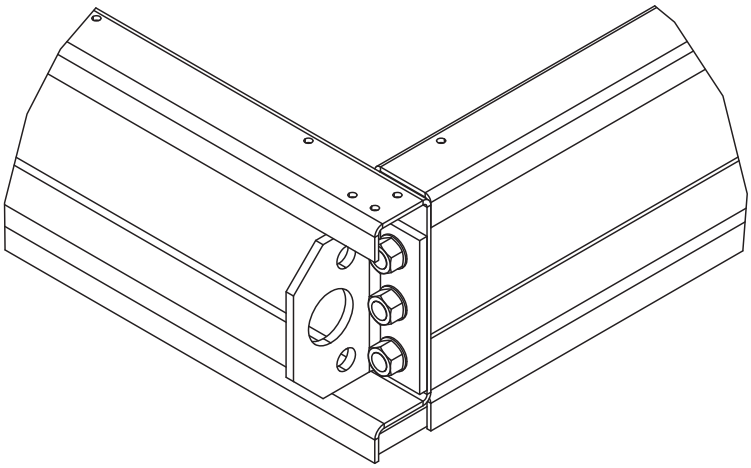

THIS DOCUMENT IS THE PROPERTY OF CARRIER CORPORATION AND IS DELIVERED UPON THE EXPRESS CONDITION THAT THE CONTENTS WILL NOT BE DISCLOSED OR USED WITHOUT CARRIER CORPORATION'S WRITTEN CONSENT

SUBMISSION OF THESE DRAWINGS OR DOCUMENTS DOES NOT CONSTITUTE PART PERFORMANCE OR ACCEPTANCE OF CONTRACT

39MW

DATE	AHUBuilder	39M Central Station Air-Handler, Size: 03 - 110	REVISION
2024-12-30	v7.06	6" Baserail and Lifting Lug Detail	

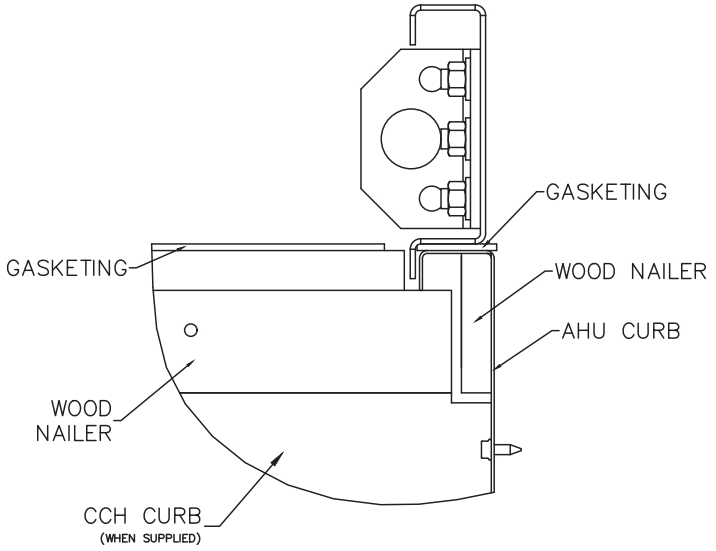

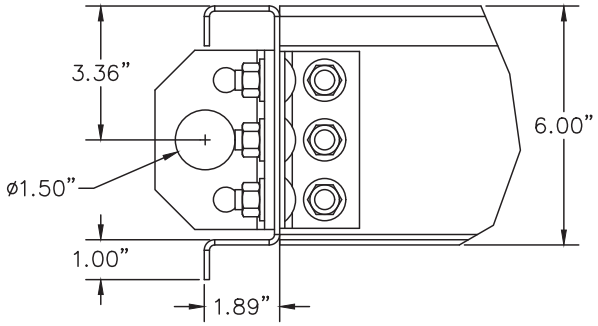

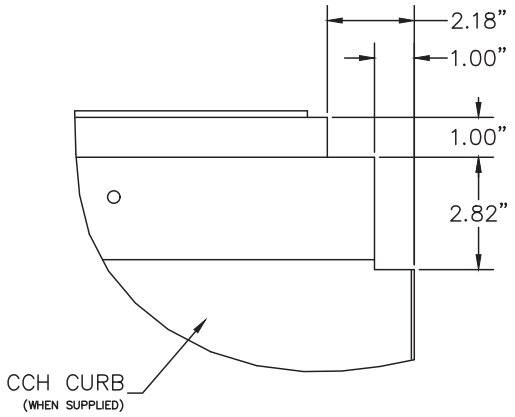

* 14" OR 24" STANDARD HEIGHT FLAT ROOF CURB

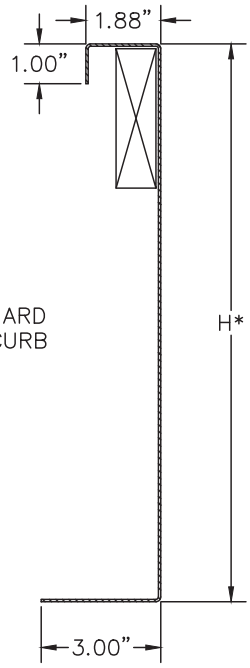

DATE	AHUBuilder	39M Central Station Air-Handler, Size: 03 - 110	REVISION
2024-12-30	v7.06	Curb, Baserail and Lifting Lug Detail	

THIS DOCUMENT IS THE PROPERTY OF CARRIER CORPORATION AND IS DELIVERED UPON THE EXPRESS CONDITION THAT THE CONTENTS WILL NOT BE DISCLOSED OR USED WITHOUT CARRIER CORPORATION'S WRITTEN CONSENT

SUBMISSION OF THESE DRAWINGS OR DOCUMENTS DOES NOT CONSTITUTE PART PERFORMANCE OR ACCEPTANCE OF CONTRACT

39MW

Carrier

THIS DOCUMENT IS THE PROPERTY OF CARRIER CORPORATION AND IS DELIVERED UPON THE EXPRESS CONDITION THAT THE CONTENTS WILL NOT BE DISCLOSED OR USED WITHOUT CARRIER CORPORATION'S WRITTEN CONSENT

SUBMISSION OF THESE DRAWINGS OR DOCUMENTS DOES NOT CONSTITUTE PART PERFORMANCE OR ACCEPTANCE OF CONTRACT

39M

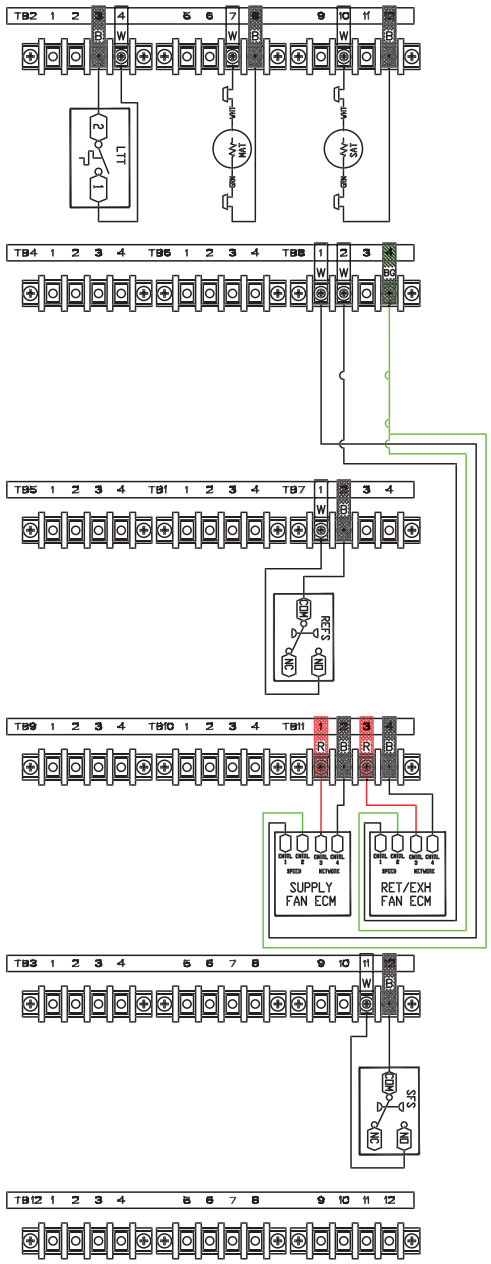

LEGEND:

	TERMINAL (MARKED)
	TERMINAL BLOCK
	SPLICE FIELD
———	WIRING FACTORY
– – –	WIRING FIELD CONTROL

A1/A2	24VAC CONTACTOR COIL
BG	BLACK OR GREEN
CCV	COOLING COIL VALVE*
COM	COMMON
EF	EXHAUST FAN
EHEAT	ELECTRIC HEATER
ERV	ENERGY RECOVERY WHEEL
EXD	EXHAUST AIR DAMPER
FBD	FACE & BYPASS DAMPER
FLTS	FILTER STATUS SWITCH
FLTS2	FILTER STATUS SWITCH 2
HCV	HEATING COIL VALVE*
HDT	HOT DECK TEMPERATURE
HUM	HUMIDIFIER ENABLE
LTT	LOW TEMPERATURE THERMOSTAT (FREEZSTAT)
MAD	MIXED AIR DAMPER
MAT	MIXED AIR TEMPERATURE
NC	NORMALLY CLOSED
NO	NORMALLY OPEN
OAD	OUTDOOR AIR DAMPER
PHEAT	PRE-HEAT
PHV	PRE-HEAT VALVE*
RAD	RETURN AIR DAMPER
RFFS	RETURN/EXHAUST FAN STATUS
RF	RETURN FAN
SAT	SUPPLY AIR TEMPERATURE
SCR	SILICON CONTROLLED RECTIFIER
SF	SUPPLY FAN
SFS	SUPPLY FAN STATUS
SI	SIGNAL IN
S/S	START/STOP
TB	TERMINAL BLOCK TERMINAL
VFD	VARIABLE FREQUENCY DRIVE
*	FIELD SUPPLIED

REVISION

39M Central Station Air Handler, Size: 03 - 110
Factory Wired Controller Wiring Diagram

AHUBuilder
v7.06

DATE
2024-12-30

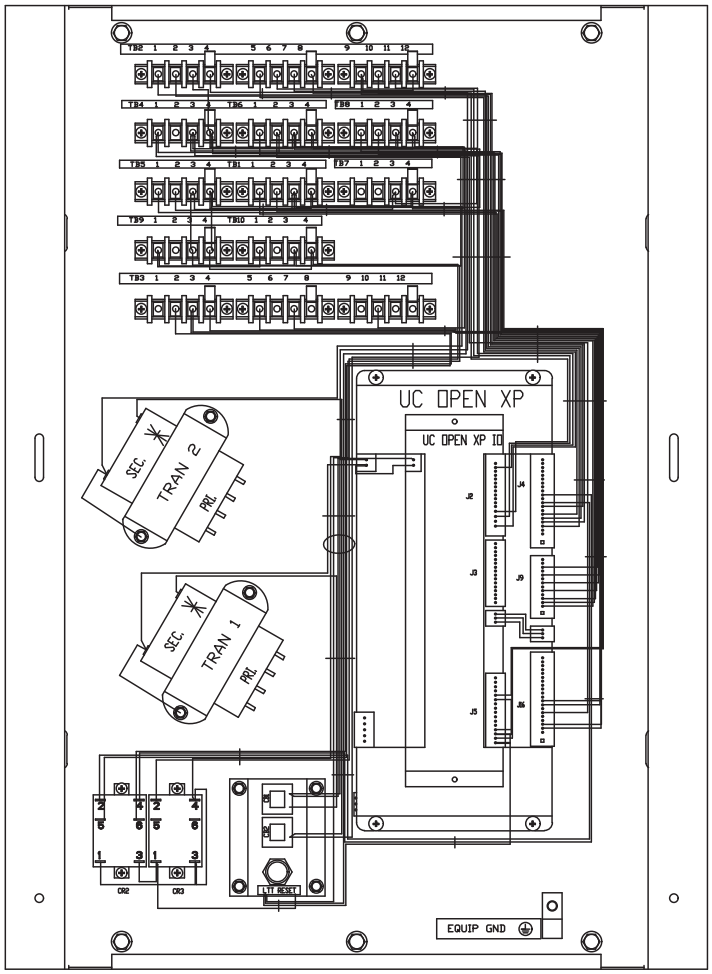

SIZE 03-06 (SHOWN)

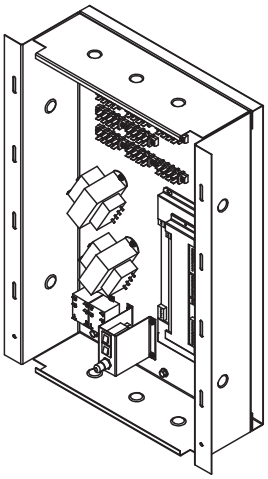

Component wiring for reference only.
When components are factory installed, wiring will be factory installed unless otherwise noted.
When components are provided by the factory for field installation, wiring is not included or installed.

THIS DOCUMENT IS THE PROPERTY OF CARRIER CORPORATION AND IS DELIVERED UPON THE EXPRESS CONDITION THAT THE CONTENTS WILL NOT BE DISCLOSED OR USED WITHOUT CARRIER CORPORATION'S WRITTEN CONSENT

SUBMISSION OF THESE DRAWINGS OR DOCUMENTS DOES NOT CONSTITUTE PART PERFORMANCE OR ACCEPTANCE OF CONTRACT

39M

DATE	AHUBuilder	39M Central Station Air-Handler, Size: 03 - 110	REVISION
2024-12-30	v7.06	Factory Wired Controller	

POWER WIRING DIAGRAM
ECM FAN 3 PHASE

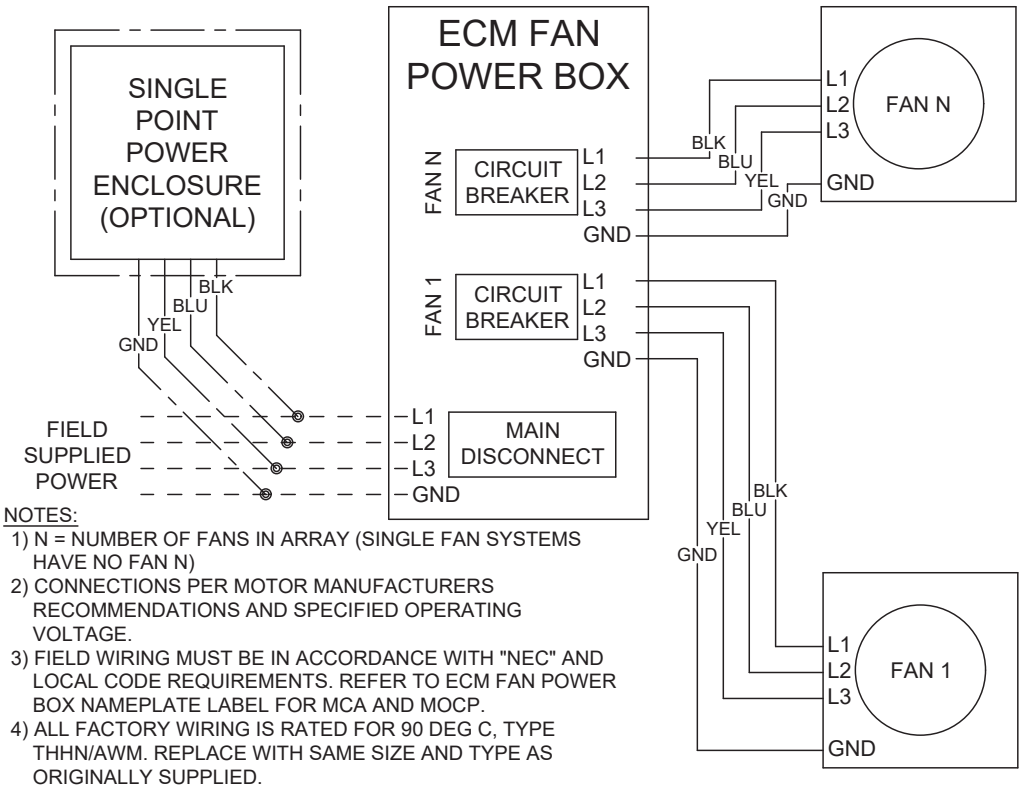

NOTES:

1) N = NUMBER OF FANS IN ARRAY (SINGLE FAN SYSTEMS HAVE NO FAN N)
2) CONNECTIONS PER MOTOR MANUFACTURERS RECOMMENDATIONS AND SPECIFIED OPERATING VOLTAGE.
3) FIELD WIRING MUST BE IN ACCORDANCE WITH "NEC" AND LOCAL CODE REQUIREMENTS. REFER TO ECM FAN POWER BOX NAMEPLATE LABEL FOR MCA AND MOCP.
4) ALL FACTORY WIRING IS RATED FOR 90 DEG C, TYPE THHN/AWM. REPLACE WITH SAME SIZE AND TYPE AS ORIGINALLY SUPPLIED.
5) USE COPPER CONDUCTOR SUPPLY WIRES ONLY

FACTORY WIRING
FIELD WIRING
OPTIONAL WIRING/EQUIPMENT
GND — GREEN, GREEN-YELLOW, OR BARE COPPER

39MA51010016 REV:B

Component wiring for reference only. When components are factory installed, wiring will be factory installed unless otherwise noted. When components are provided by the factory for field installation, wiring is not included or installed.

THIS DOCUMENT IS THE PROPERTY OF CARRIER CORPORATION AND IS DELIVERED UPON THE EXPRESS CONDITION THAT THE CONTENTS WILL NOT BE DISCLOSED OR USED WITHOUT CARRIER CORPORATION'S WRITTEN CONSENT

SUBMISSION OF THESE DRAWINGS OR DOCUMENTS DOES NOT CONSTITUTE PART PERFORMANCE OR ACCEPTANCE OF CONTRACT

39M

DATE	AHUBuilder	39M Central Station Air-Handler, Size: 03 - 110	REVISION
2024-12-30	v7.06	ECM Three Phase Wiring Detail	

CONTROLS WIRING DIAGRAM
ECM FAN, EBM-PAPST

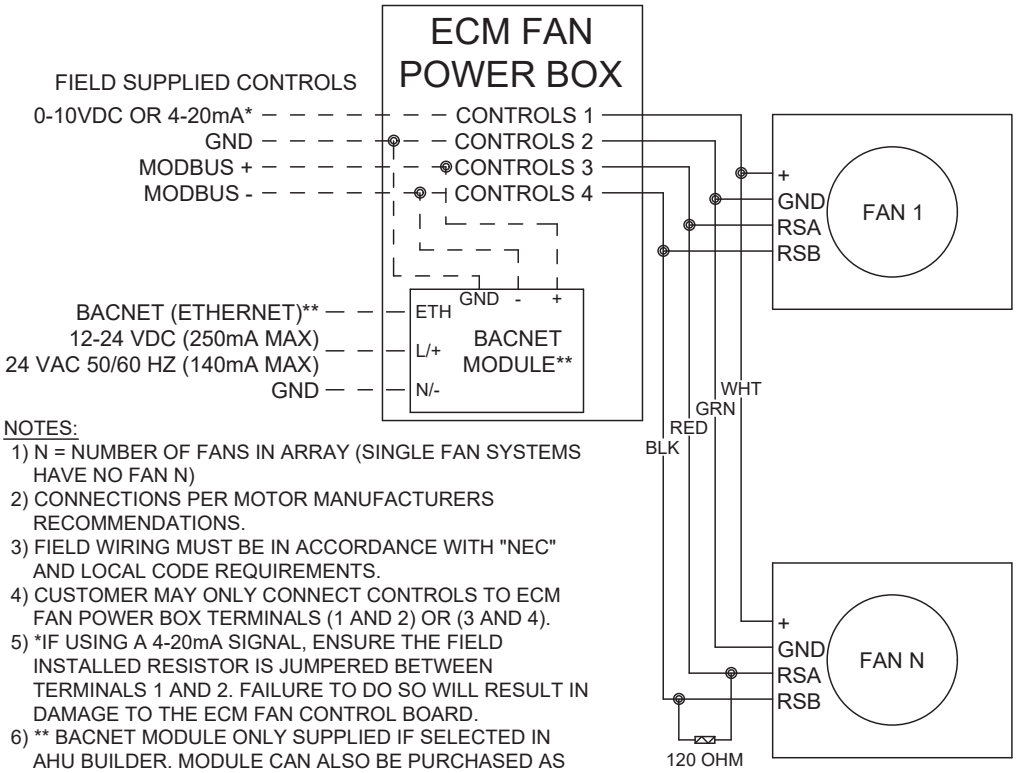

NOTES:

1) N = NUMBER OF FANS IN ARRAY (SINGLE FAN SYSTEMS HAVE NO FAN N)
2) CONNECTIONS PER MOTOR MANUFACTURERS RECOMMENDATIONS.
3) FIELD WIRING MUST BE IN ACCORDANCE WITH "NEC" AND LOCAL CODE REQUIREMENTS.
4) CUSTOMER MAY ONLY CONNECT CONTROLS TO ECM FAN POWER BOX TERMINALS (1 AND 2) OR (3 AND 4).
5) *IF USING A 4-20mA SIGNAL, ENSURE THE FIELD INSTALLED RESISTOR IS JUMPERED BETWEEN TERMINALS 1 AND 2. FAILURE TO DO SO WILL RESULT IN DAMAGE TO THE ECM FAN CONTROL BOARD.
6) ** BACNET MODULE ONLY SUPPLIED IF SELECTED IN AHU BUILDER. MODULE CAN ALSO BE PURCHASED AS AN ACCESSORY AND FIELD INSTALLED.

+ AIN 1 U / IO2, MOTOR SPECIFIC
FACTORY WIRING
FIELD WIRING

39MA51010018 REV:C

Component wiring for reference only. When components are factory installed, wiring will be factory installed unless otherwise noted. When components are provided by the factory for field installation, wiring is not included or installed.

THIS DOCUMENT IS THE PROPERTY OF CARRIER CORPORATION AND IS DELIVERED UPON THE EXPRESS CONDITION THAT THE CONTENTS WILL NOT BE DISCLOSED OR USED WITHOUT CARRIER CORPORATION'S WRITTEN CONSENT

SUBMISSION OF THESE DRAWINGS OR DOCUMENTS DOES NOT CONSTITUTE PART PERFORMANCE OR ACCEPTANCE OF CONTRACT

39M

DATE	AHUBuilder	39M Central Station Air-Handler, Size: 03 - 110	REVISION
2024-12-30	v7.06	ECM Controls Wiring Diagram - EBM Pabst	

Air Filter Submittal

Project: San Bernadino County Sherriff Station AHU
Unit Tag: AH 3

Carrier Part Number	31KB50312241224244
Kit Description	Filter Kit
Unit Airflow, CFM	19600
Filter Velocity, FPM	363
Filter Sizes and Quantities	Qty (3) 12in. x 24in., Qty (12) 24in. x 24in.

DFpro

Synthetic Cartridge Filter

DFpro rigid filters are designed to provide consistent high efficiency filtration in constant and variable air volume systems. Deep pleats are held firmly in place with plastic separators and expanded metal backing. Every edge of the media pack is glued inside the periphery of the frame to prevent air and dust bypass. The media and separators are 100% polypropylene to resist moisture damage, microbial growth, and puncture damage. Heavy gauge galvanized frame resists corrosion and maintains its structural integrity for extended months of service.

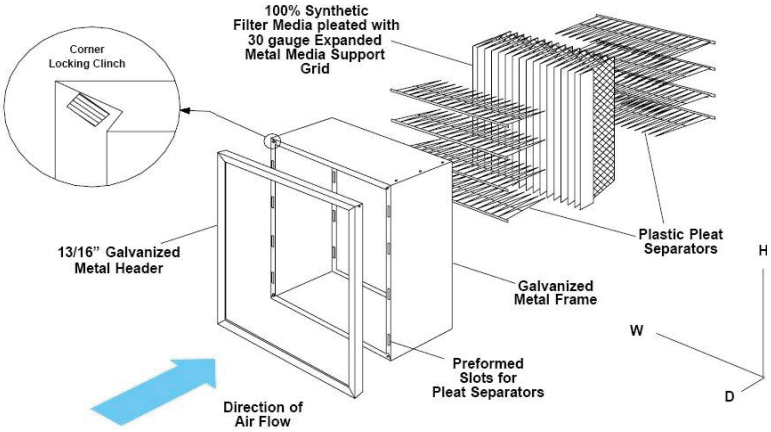

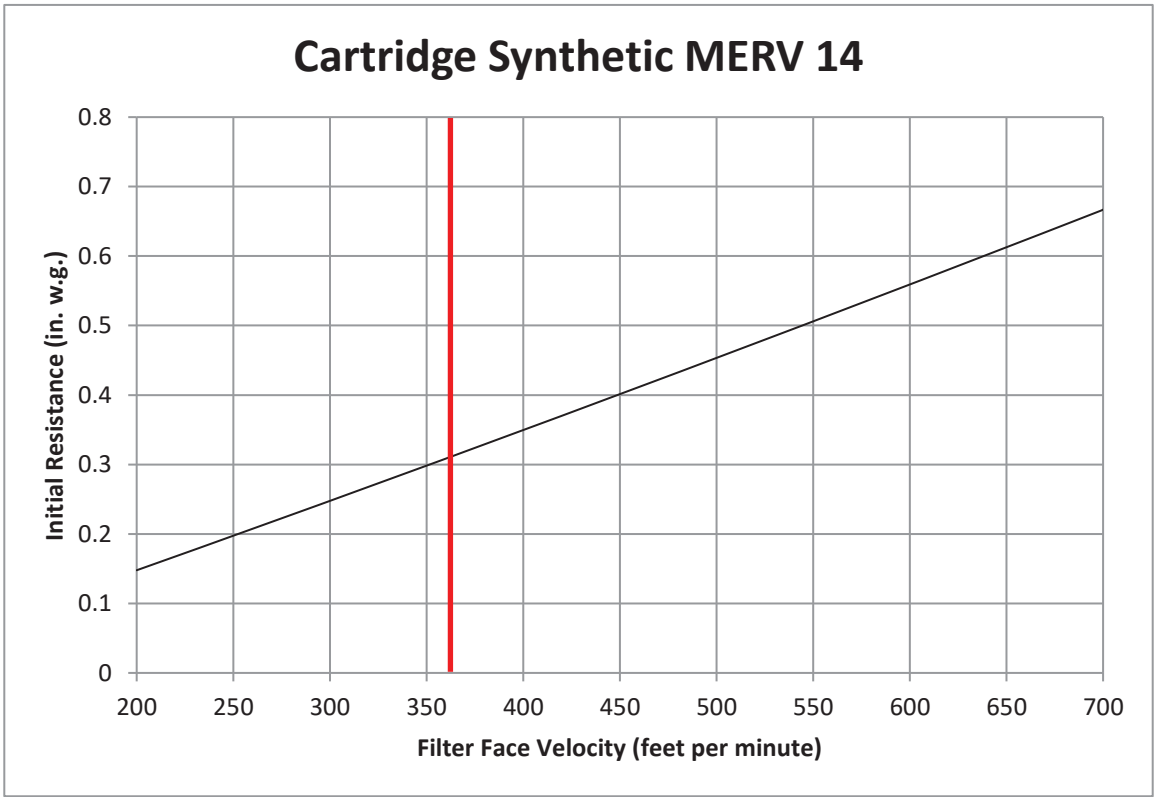

Air Filter Submittal

Project: San Bernadino County Sherriff Station AHU
Unit Tag: AH 3

Carrier Part Number	31K2C0312241224244
Kit Description	Filter Kit
Unit Airflow, CFM	19600
Filter Velocity, FPM	363
Filter Sizes and Quantities	Qty (3) 12in. x 24in., Qty (12) 24in. x 24in.

DFpro

MERV 13 Pleated Filter

The 100% synthetic graduated density media is continuously bonded to a 30 gauge galvanized, corrosion resistant, expanded metal support grid with an effective open area of 96%. The media is resistant to a wide range of chemicals, does not absorb moisture and will not support microbial growth.
The controlled pleat spacing maximizes surface area and dust holding capacity and is bonded to the enclosure frame to prevent dust bypass. The enclosure frame is constructed of high wet strength moisture resistant beverage board. The diagonal support members of the frame are bonded to the entering and exiting apexes of each pleat to prevent pleat collapse and filter bowing.

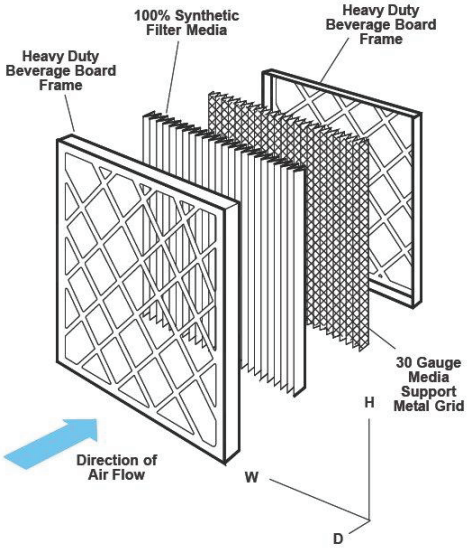

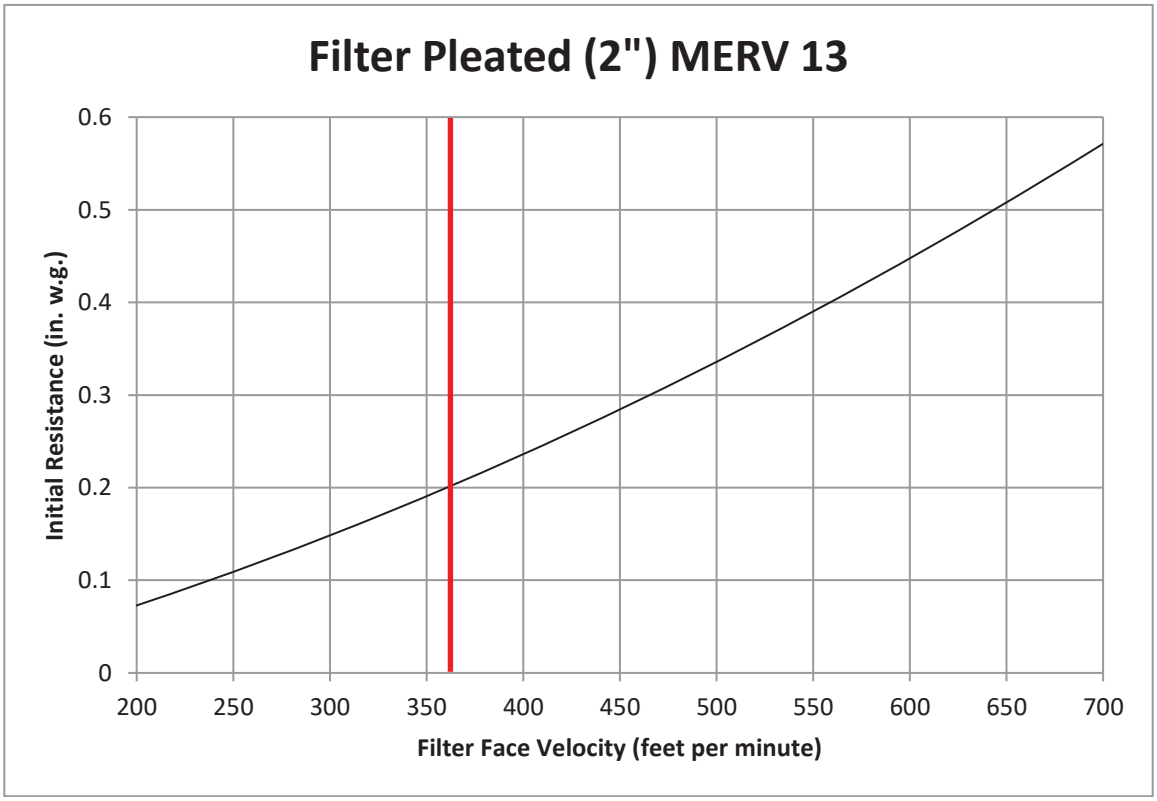

Unit Report AH 4

Project: San Bernadino County Sherriff Station AHU
Unit Tag: AH 4

Unit Parameters

Aero Outdoor Air Handler
39MW Size 36W
Insulation: R-13 Double Wall Sealed Panel
Exterior Finish: Painted Exterior Panels
Interior Finish: Galvanized Interior Panels
Level II Thermal Break
6 inch tall Base Rail
Field Supplied Curb

Mixing Box

Damper: Bottom Premium Parallel
Door Right Side

Return Fan

Shipping Split After
Rear Inlet
Fan Sled
- Plenum Fan B PEBM0105
- Direct Drive Fans
- Fan Count 5
- 2156 fanRPM Class III
- Full Open Discharge
- ECM Control Box (Standard)
- Piezometer and Transducer (1 fan)
- Voltage Selected - 460/3/60
- Full Load Amps - 7.7 Each
- FLA/MCA/MOCP 38.5/40.4/45

Return/Exhaust Fan Status (DI)
Door Right Side

Plenum

Length 24 inches

Mixing Box

Shipping Split After
Damper: Left Side Premium Opposed
Damper: Rear Premium Parallel
Mixed Air Temperature Sensor (AI)
Door Right Side

Bag/Cartridge Filter

Bag/Cartridge Filter 6 - 12 IN. Side Loading
12" Cartridge w/ Header (Synthetic) MERV 14
Qty (4) 12in. x 24in.
Qty (8) 24in. x 24in.
Pre Filter : 2In. Flat Filter
2" Pleated MERV 13 Filter
Qty (4) 12in. x 24in.
Qty (8) 24in. x 24in.
Door Right Side
Minihelic Differential Pressure Gage 0-2" w.c. Right Side
Minihelic Differential Pressure Gage 0-2" w.c. Right Side

Chilled Water Coil and Plenum

Shipping Split After
Low Temperature Thermostat (DI)
304 Stainless Steel Drain Pan Right Side
Chilled Water 36.67 sq.ft 6 Row 11 FPI Double Circuit
Coil Connection Right Side
1/2 in. Tube Diameter
AL fins Galv. Casing
Steel Header
No Coating
Door Right Side

Control Plenum

Length 18 inches
Unprogrammed Carrier UC Open XP Controller Located in Control Plenum
Door Right Side

Draw-Thru Supply Fan

Rear Inlet
Fan Sled
Plenum Fan B PEBM0105
Direct Drive Fans
Fan Count 5
3304 fanRPM Class III
Field Supplied Discharge
ECM Control Box (Standard)
Piezometer and Transducer (1 fan)
Voltage Selected - 460/3/60
Full Load Amps - 7.7 Each
FLA/MCA/MOCP 38.5/40.4/45
Supply Fan Status (DI)
Supply Air Temperature Sensor (AI)
Door Right Side

Weights and Dimensions

(LxWxH in ft in) 23' 10" x 9' 3" x 6' 2" **
Operating 7765 LB **

Warranty Part Number(s) (NET PRICING)

39LMR-SU-FIRST Qty 1.0 First 39 Series Start-up

Unit Report AH 4

Project: San Bernadino County Sherriff Station AHU
Unit Tag: AH 4

Configuration Notes

An Outdoor Plenum fan may not discharge through the roof of the unit.

If a bottom connection is required, use an Inlet Plenum Section.

An Outdoor Plenum fan may not discharge through the roof of the unit.

Discharge duct(s) must be gasketed and screwed directly to the discharge panel of the unit.

Warranty Part Number(s) (NET PRICING)

QTY 1.0 First 39 Series Start-up

** Weights and Dimensions are approximate. Weights include base unit weight, coils (wet & dry), fans and fan motors, and other components, but does not include filters, drives and skids. Approximate dimensions are provided primarily for shipping purposes, for exact dimensions, refer to submittal drawings. Shipping skids are not included.

All filter media efficiency ratings are for the filter media only.

Chilled Water Coil Performance Summary

Project: San Bernadino County Sherriff Station AHU
Unit Tag: AH 4

Cooling Application's Balance Criteria: Fluid Flow

Coil Model	**28MC**	
Number of Coils	**1**	
Row / FPI / Circ	**6 / 11 / DB**	
Fin Thickness	**.0042**	in
Fin Type	**Sine Wave**	
Face Area Type	**Large**	
Coil Face Area	**36.67**	sqft
Face Velocity	**490.9**	fpm
Fin-Casing Material	**Al-Galv.**	
Tube Diameter	**0.5**	in
Tube spacing: Stf x Str	**1.25 x 0.781**	in
Tube Wall Thickness	**0.016**	in
Actual Airflow	**18000**	CFM
Site Altitude	**0**	ft
Standard Airflow (adj. to std. dry atmosphere)	**17264**	SCFM
Total Cooling Capacity	**628.92**	MBH
Sensible Cooling Capacity	**556.54**	MBH
Fluid Flow Rate	**83.1**	gpm
Fluid Pressure Drop	**3.7**	ft wg
Fluid Velocity	**2.2**	ft/s
Entering Fluid Temperature	**43.00**	F
Leaving Fluid Temperature	**58.09**	F
Fluid Temperature Rise	**15.1**	F
Entering Air Dry Bulb	**84.30**	F
Entering Air Wet Bulb	**66.10**	F
Entering Air Enthalpy	**30.76**	BTU/lb
Leaving Air Dry Bulb	**54.92**	F
Leaving Air Wet Bulb	**54.06**	F
Leaving Air Enthalpy	**22.6**	BTU/lb
Air Friction	**0.68**	in wg
Brine	**FW**	
Brine Concentration	**0**	%
Fouling Factor	**0.0**	(hr-sqft-F)/BTU

NOTE: Certified in accordance with the AHRI Forced-Circulation Air-Cooling and Air-Heating Coils Certification Program which is based on AHRI Standard 410 within the Range of Standard Rating Conditions listed in Table 1 of the Standard. Certified units may be found in the AHRI Directory (www.ahridirectory.org).

LEGEND:
- Stf -- Tube spacing across coil face
- Str -- Tube spacing in direction of airflow

Unit Acoustics Summary

Project: San Bernadino County Sherriff Station AHU
Unit Tag: AH 4

Unit Acoustics Sound Power Level:

	Discharge	Inlet	Casing
63 Hz	86	80	78
125 Hz	87	82	80
250 Hz	98	94	91
500 Hz	100	96	93
1000 Hz	102	92	90
2000 Hz	100	89	86
4000 Hz	95	89	86
8000 Hz	90	82	80

Sound power levels are rated in accordance with AMCA 300.

Unit Acoustics A-weighted Sound Power Level:

	Discharge	Inlet	Casing
63 Hz	60	54	52
125 Hz	71	66	64
250 Hz	90	85	83
500 Hz	97	92	90
1000 Hz	102	92	90
2000 Hz	101	90	87
4000 Hz	96	90	87
8000 Hz	89	81	79

Sound power levels are rated in accordance with AMCA 300.

Sound contributed by Supply and Return Fans
Unit Acoustics PART-LOAD Sound Power Level:

	Discharge	Inlet	Casing
63 Hz	76	75	72
125 Hz	78	76	72
250 Hz	84	84	79
500 Hz	87	84	79
1000 Hz	90	84	79
2000 Hz	88	83	77
4000 Hz	83	84	78
8000 Hz	79	75	69

Sound power levels are rated in accordance with AMCA 300.

Unit Acoustics Summary

Project: San Bernadino County Sherriff Station AHU
Unit Tag: AH 4

Unit Acoustics PART-LOAD A-weighted Sound Power Level:

	Discharge	Inlet	Casing
63 Hz	**50**	**49**	**46**
125 Hz	**62**	**60**	**56**
250 Hz	**76**	**76**	**71**
500 Hz	**84**	**81**	**76**
1000 Hz	**90**	**84**	**79**
2000 Hz	**90**	**84**	**78**
4000 Hz	**84**	**85**	**79**
8000 Hz	**78**	**74**	**68**

Sound power levels are rated in accordance with AMCA 300.

Sound contributed by Supply and Return Fans

Return Fan Performance Summary

Project: San Bernadino County Sherriff Station AHU
Unit Tag: AH 4

Fan Model	**NC-39M3605HPEE**
Unit Size	**36W**
Fan Type **ECM**	
DIRECT DRIVE PLENUM (EBM-05) (Return)	
Fan Wheel Diameter	**15.7**
Fan Class	**III**
Static Efficiency (%)	**54**
Fan Application	**Return Fan**
Orientation	**Horizontal**
Actual Airflow, CFM	**15700**
Site Altitude, , ft	**0**
Total Upstream Static Losses, in wg	**1.31**
Number of Fans	**5**
Fan RPM / Max RPM	**2156/3700**
Each Fan BHP	**1.2**
Fan Total BHP	**6.0**
(n-1) Airflow, CFM	**22718**
(n-1) Redundancy (%)	**145**
Fan Electrical Power, kW	**5.5**
ECM Setting, VDC	**5.8**

Unit is outside of the scope of AHRI Standard 430/431.

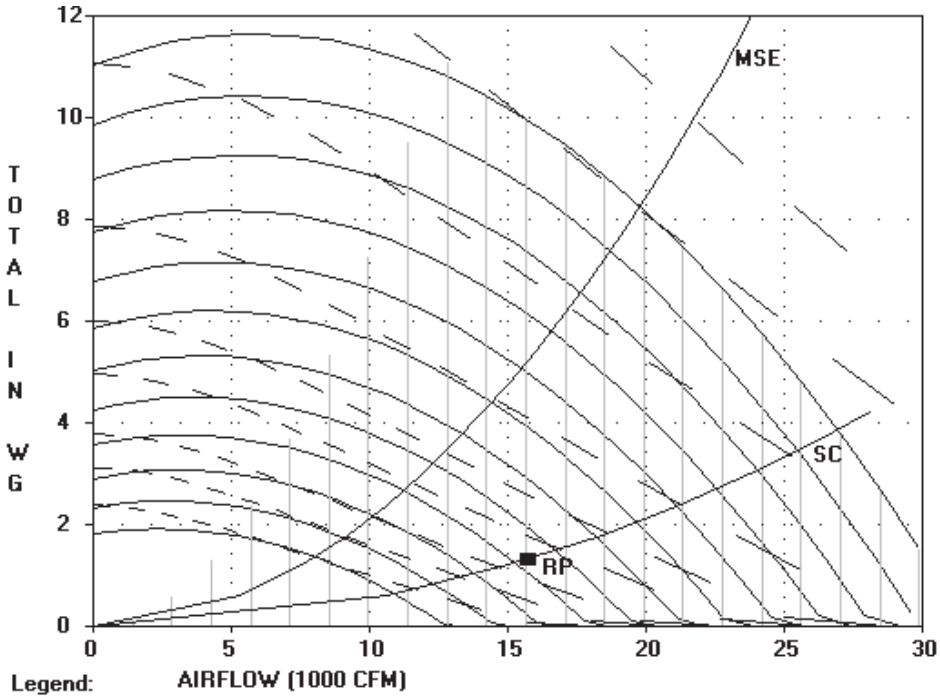

Legend:

\ - RPM \ - BHP MSE - Max. Static Eff. SC - System Curve RP - Rated Point

RPM = 2156 BHP = 6.0 CLASS III MAX. RPM = 3700

RPM's (x 100, L to R): 15. 17. 19. 21. 23. 25. 27. 29. 31. 33. 35. 37.

BHP's (L to R): 2.5 3.8 5 7.5 10 15 25 37.5 50

Supply Fan Performance Summary

Project: San Bernadino County Sherriff Station AHU
Unit Tag: AH 4

Fan Model	**39M3605HPEE-U**
Unit Size	**36W**
Fan Type	**ECM DIRECT DRIVE PLENUM (EBM-05)**
Fan Wheel Diameter	**15.7**
Fan Class	**III**
Fan Application	**Supply Fan**
Orientation	**Horizontal**
Actual Airflow, CFM	**18000**
Site Altitude, ft	**0**
Upstream Ext. Static, in wg	**0.00**
Downstream Ext. Static, in wg	**5.00**
Cooling Coil Static, in wg	**0.68**
Heating Coil Static, in wg	**0.00**
Total Accessory Static, in wg	**0.76**
Total Static Pressure, in wg	**6.44**
Calculated Fan RPM / Motor RPM	**3304 / 0**
Class III Max. RPM	**3700**
Static Efficiency (%)	**69**
Number of Fans	**5**
Each Fan BHP	**5.3**
Fan Total BHP	**26.5**
(n-1) Airflow, CFM	**18252**
(n-1) Redundancy (%)	**101**
Fan Electrical Power, kW	**22.4**
ECM Setting, VDC	**8.9**

AHRI CERTIFIED®
www.ahridirectory.org
Central Station Air-Handling Unit Supply Fans
AHRI Standard 430/431

Accessories:
(1) Flat Synthetic (2") MERV 13 [0.27]
(1) CARTRIDGE LONG/SHORT Synthetic MERV 14 [0.41]
(1) Side Mixing or Exhaust Box [0.08]

NOTE: Certified in accordance with the AHRI Central Station Air-Handling Unit Certification Program, which is based on AHRI Standards 430/431. Certified units may be found in the AHRI Directory at www.ahridirectory.org

Supply Fan Performance Summary

Project: San Bernadino County Sherriff Station AHU
Unit Tag: AH 4

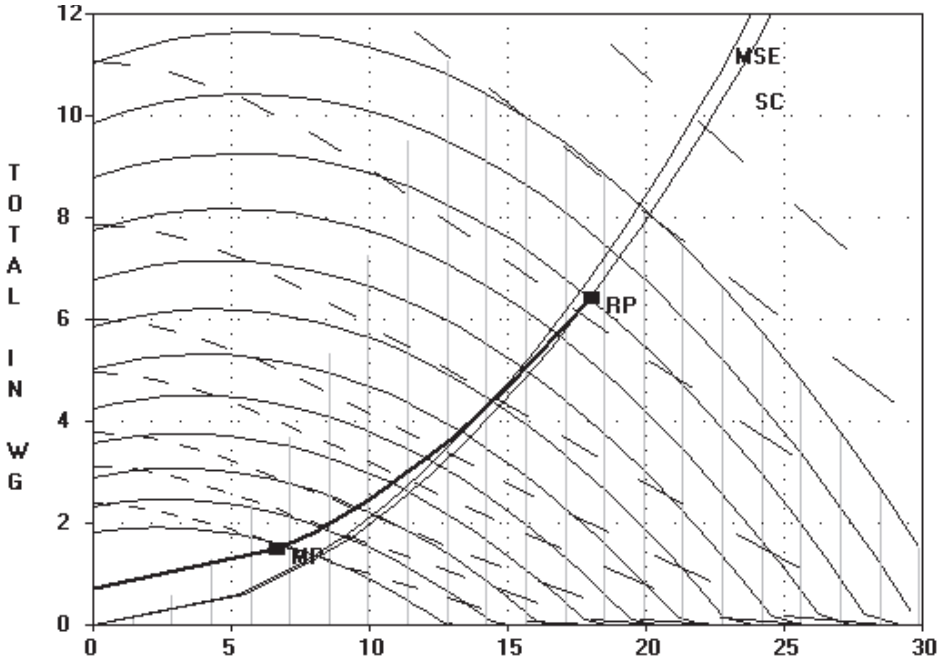

Legend: - RPM - BHP MSE - Max. Static Eff. SC - System Curve RP - Rated Point

RPM = 3304 BHP = 26.5 CLASS III MAX. RPM = 3700

RPM's (x 100, L to R): 15. 17. 19. 21. 23. 25. 27. 29. 31. 33. 35. 37.

BHP's (L to R): 2.5 3.8 5 7.5 10 15 25 37.5 50

Sensor and Actuator Points List

Project: San Bernadino County Sherriff Station AHU
Unit Tag: AH 4

Name	AI	AO	DI	DO
Return/Exhaust Fan Status			X	
Mixed Air Temperature Sensor	X			
Low Temperature Thermostat			X	
Supply Fan Status			X	
Supply Air Temperature Sensor	X			

Carrier Part Number ..... OPN-UCXP
Manufacturer ..... Carrier

I-VU® UC Open XP

Unit Controller

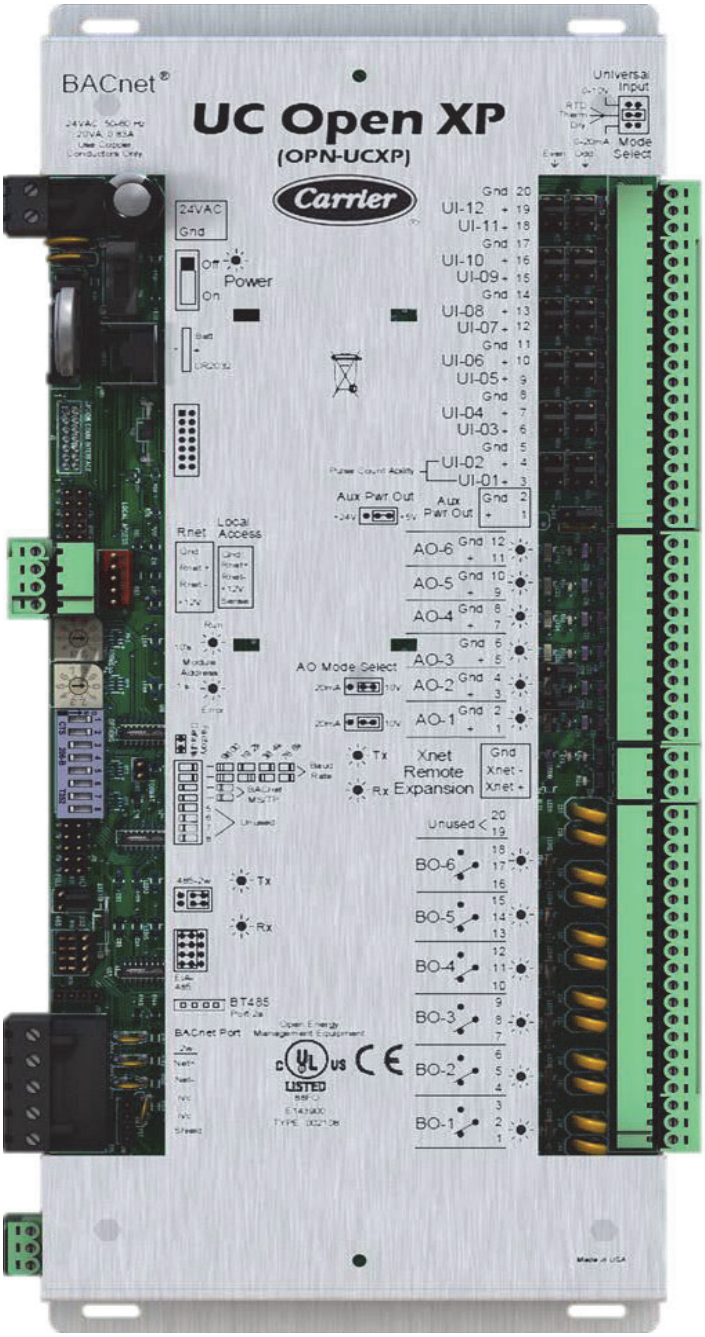

BACNet Support – Advanced application controller (B-AAC), as defined in BACNet 135-2001 Annex L
BACNet Communication Port – EIA-485 port for BACnet MS/TP communications (baud rate is DIP switch selectable)
Local Access Communication Port – For system start-up and troubleshooting (115.2 kbps)
Rnet Communication Port – For connecting Carrier communicating room sensors and Carrier's touchscreen user interface
Inputs – 12 inputs: Configurable for 0-10V, RTD/Thermistor/Dry contact, or 0-20mA. Inputs 1 and 2 may be used for pulse counting. All analog inputs have 12 bit A/D resolution.
Outputs – 6 binary outputs: Configured as dry contact, normally open or normally closed. All binary outputs must be powered from a Class 2 power source.
6 analog outputs: 1 and 2 are configurable for 0-10V or 0-20mA; 3-6 are 0-10V only. Analog outputs have 8 bit D/A resolution.
Protection – Incoming power and network connections are protected by non-replaceable internal solidstate polyswitches that reset themselves when the condition that causes a fault returns to normal. The power, network, input, and output connections are also protected against voltage transient and surge events.
Real Time Clock – Battery-backed real time clock keeps track of time in event of power failure.
Battery – 10-year Lithium CR2032 battery provides a minimum of 10,000 hours of trend data & time retention during power outages.
Status Indicators – LED status of power, running, and errors. LED indicators for transmit/receive for BACnet port and for each of the 12 outputs.
Controller Addressing – Rotary DIP switches set BACnet MS/TP MAC address of controller.
Listed By – UL-916, FCC Part 15-Subpart B- Class A, CE EN50082-1997
Operating/Storage Range – -24° to 140°F (-30° to 60°C), 10-90% relative humidity, non-condensing
Power Requirements – 24VAC +/- 10%, 50-60Hz
20VA power consumption
Single Class 2 source only, 100VA or less

Controller Expansion Board Submittal

Project: San Bernadino County Sherriff Station AHU
Unit Tag: AH 4

Carrier Part Number ..... OPN-UCXPIO
Manufacturer ..... Carrier

I-VU® UC Open XPIO

Unit Controller Expansion Board

Communication Ports – Xnet Remote Expansion port: For connecting to a UC XP Controller via the Xnet network.
Inputs – 8 binary inputs: Inputs 1-8 are binary only and support pulse counting up to 10 Hz.
8 analog inputs: Inputs 9-16 are universal inputs, jumper selectable between thermistor/dry contact and 0-5VDC. All analog inputs have 10 bit A/D resolution.
Outputs – 8 binary outputs: Configured as dry contact, normally open, and must be powered from a Class 2 power source.
Protection – Incoming power and network connections are protected by non-replaceable internal solidstate polyswitches that reset themselves when the condition that causes a fault returns to normal. The power, network, input, and output connections are also protected.
Status Indicators – LED status of power, outputs, running and errors.
Listed By – UL916 (Canadian Std. C22.2 No. 205-M 1983), CE, FCC Part15-Subpart B - Class A
Operating/Storage Range – -20°F to 140°F (-29° to 60°C), 10-90% relative humidity, non-condensing
Power Requirements – 24VAC +/- 10%, 50-60Hz
13VA power consumption
26VDC (25V min, 30V max)
Single Class 2 source only, 100VA or less

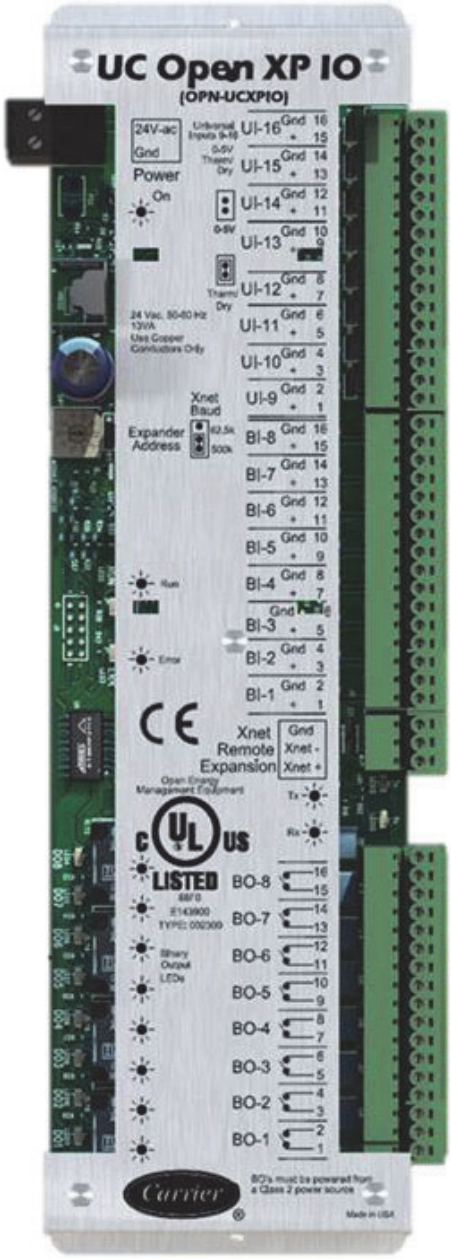

Supply Air Temperature (SAT) Sensor Submittal

Project: San Bernadino County Sherriff Station AHU
Unit Tag: AH 4

Carrier Part Number	33ZCSENSAT
Manufacturer	Automation Components, Inc.
Manufacturer Part Number	ACI/10K-CP-D4
Cable	1
Channel	UI-2
Terminal/Signal	TB2-10 / 10K Thermistor AI
Terminal/Signal	TB2-12 / Signal Ground

SAT

Supply Air Temperature Sensor

The SAT sensor consists of a thermistor encased within a stainless steel probe.

The thermistor has a temperature range of -245º to 185º F with a nominal resistance of 10,000 ohms at 77º F.

Wire Terminations

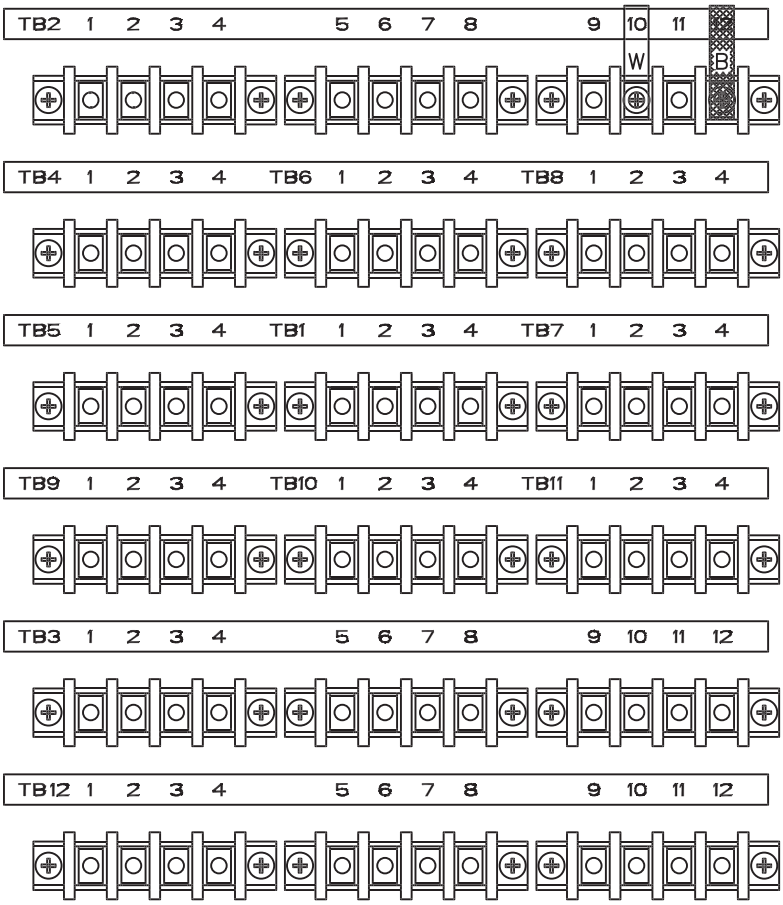

Mixed Air Temperature (MAT) Sensor Submittal

Project: San Bernadino County Sherriff Station AHU
Unit Tag: AH 4

Carrier Part Number HH79NZ041
Manufacturer ..... Automation Components, Inc.
Manufacturer Part Number ACI/10K-CP-A24
Cable 4
Channel UI-3
Terminal/Signal ..... TB2-7 / 10K Thermistor AI
Terminal/Signal ..... TB2-8 / Signal Ground

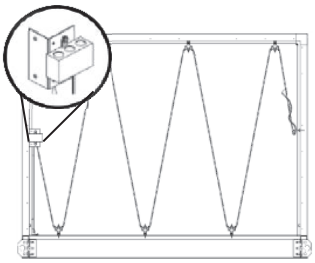

MAT

Mixed Air Temperature Sensor

The MAT sensor consists of multiple, evenly spaced thermistors encased within a flexible copper tube.

Mechanical and electrical averaging is used to achieve the temperature measurement over the entire element length.

The MAT sensor has a range of -40º to 185º F with a nominal resistance of 10,000 ohms at 77º F.

The sensor is located in the last mixing box in the airflow.

Wire Terminations

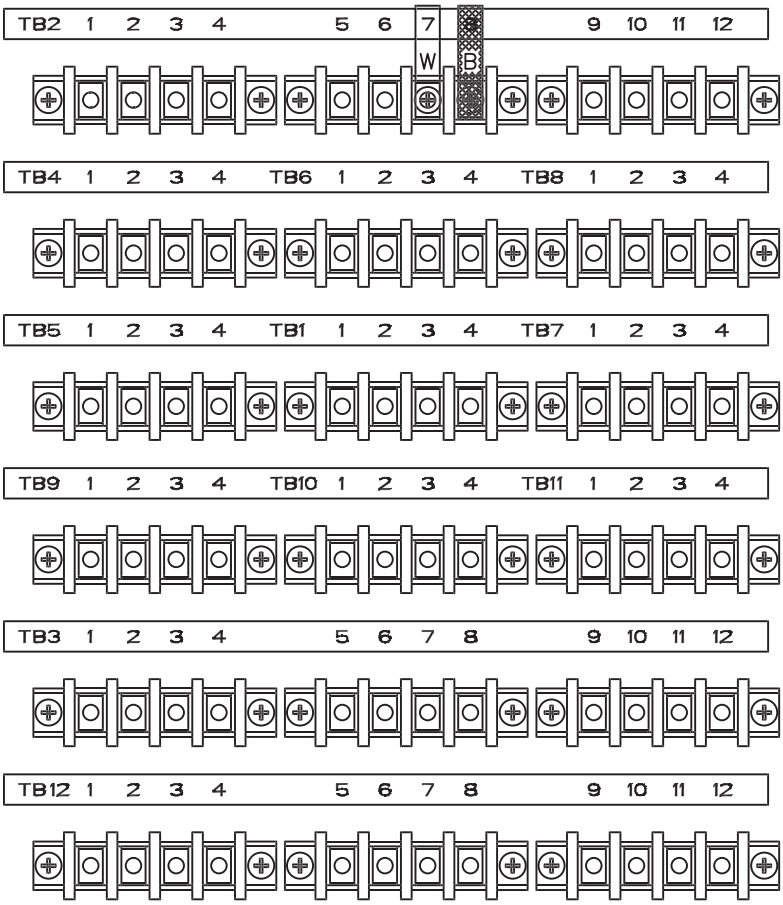

Low Temperature Thermostat Submittal

Project: San Bernadino County Sherriff Station AHU
Unit Tag: AH 4

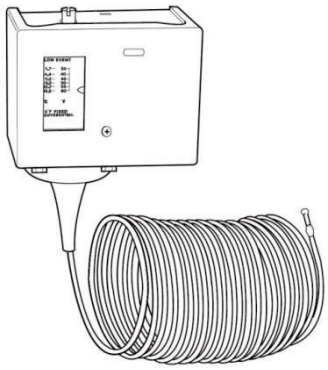

Carrier Part Number HH22BZ001
Manufacturer ..... Schneider Electric
Manufacturer Part Number TC-5231-702
Cable 2
Channel UI-5
Terminal/Signal ..... TB2-4 / Dry Contact DI
Terminal/Signal ..... TB2-3 / Signal Ground

LTT

Low Temperature Thermostat

20 ft. element senses temperature over a large area. Control responds to the coldest one-foot section of the sensor.

Adjustable setpoint from 35º F to 60º F with 5º F fixed differential.

Rated for use at 17 full load amps (120/208/240 Vac), 24 non-inductive amps (120/208/240 Vac), and 16 non-inductive amps (24 Vac).

Enclosure rating: NEMA Type 1.

Approvals: UL & CSA.

Wire Terminations

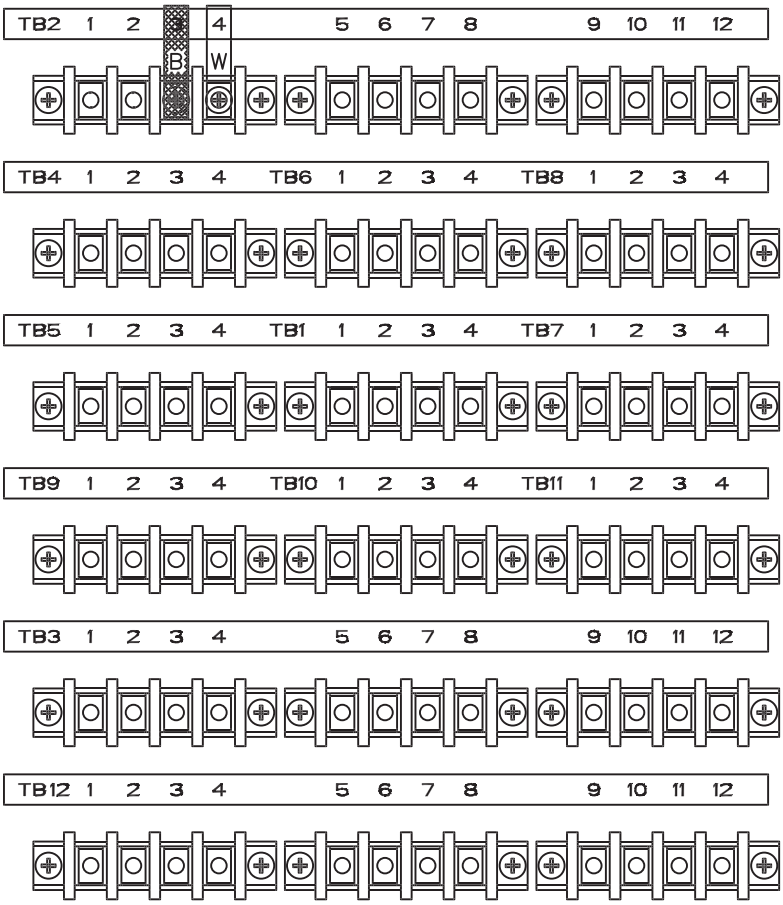

Supply Fan Status Sensor Submittal

Project: San Bernadino County Sherriff Station AHU
Unit Tag: AH 4

Carrier Part Number 39MA51000021
Manufacturer ..... Automation Components, Inc.
Manufacturer Part Number ..... A/MCS-A
Cable 21
Channel UI-6
Terminal/Signal ..... TB3-11 / Dry Contact DI
Terminal/Signal ..... TB3-12 / Signal Ground

SFS

Supply Fan Status Sensor

The A/MCS-A is a normally open (N/O) solid state adjustable current switch.

Outputs are non-polarity sensitive, N/O solid-state contacts for switching both AC and DC circuits up to 36 volts.

Unit includes two Status LED indicators, which signal three states:

1. Tripped on
2. Current present but below trip point
3. Current off or below the low end of the adjustable trip point range.

Wire Terminations

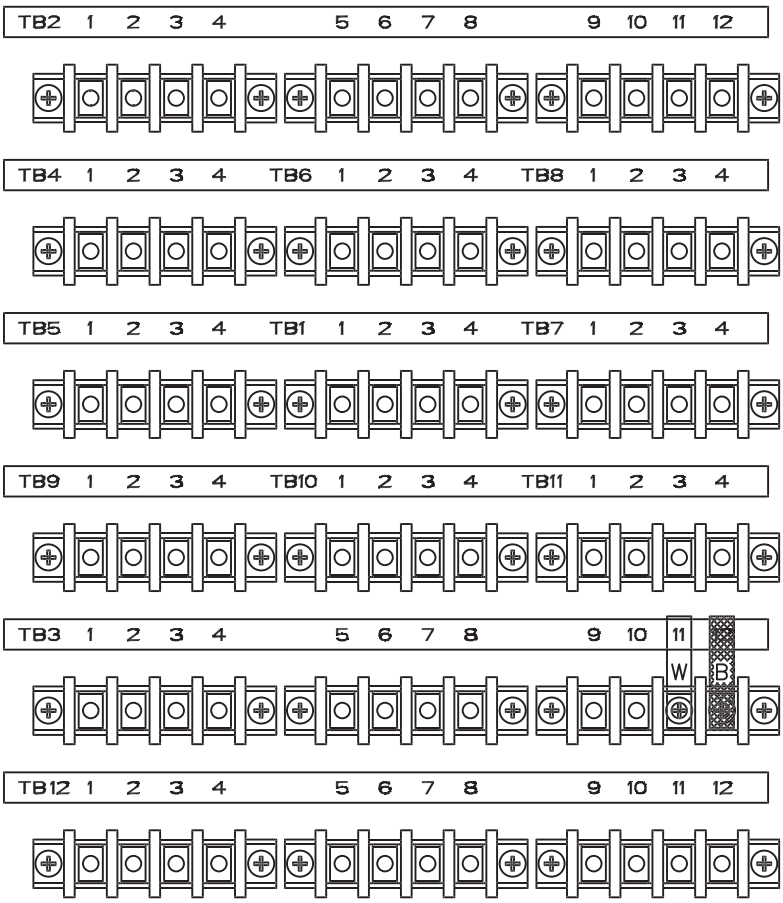

Return/Exhaust Fan Status Sensor Submittal

Project: San Bernadino County Sherriff Station AHU
Unit Tag: AH 4

Carrier Part Number	39MA51000021
Manufacturer	Automation Components, Inc.
Manufacturer Part Number	A/MCS-A
Cable	19
Channel	EXIN-1
Terminal/Signal	TB7-1 / Dry Contact DI
Terminal/Signal	TB7-2 / Signal Ground

RFS/EFS

Return/Exhaust Fan Status Sensor

The A/MCS-A is a normally open (N/O) solid state adjustable current switch.

Outputs are non-polarity sensitive, N/O solid-state contacts for switching both AC and DC circuits up to 36 volts.

Unit includes two Status LED indicators, which signal three states:

1. Tripped on
2. Current present but below trip point
3. Current off or below the low end of the adjustable trip point range.

Wire Terminations

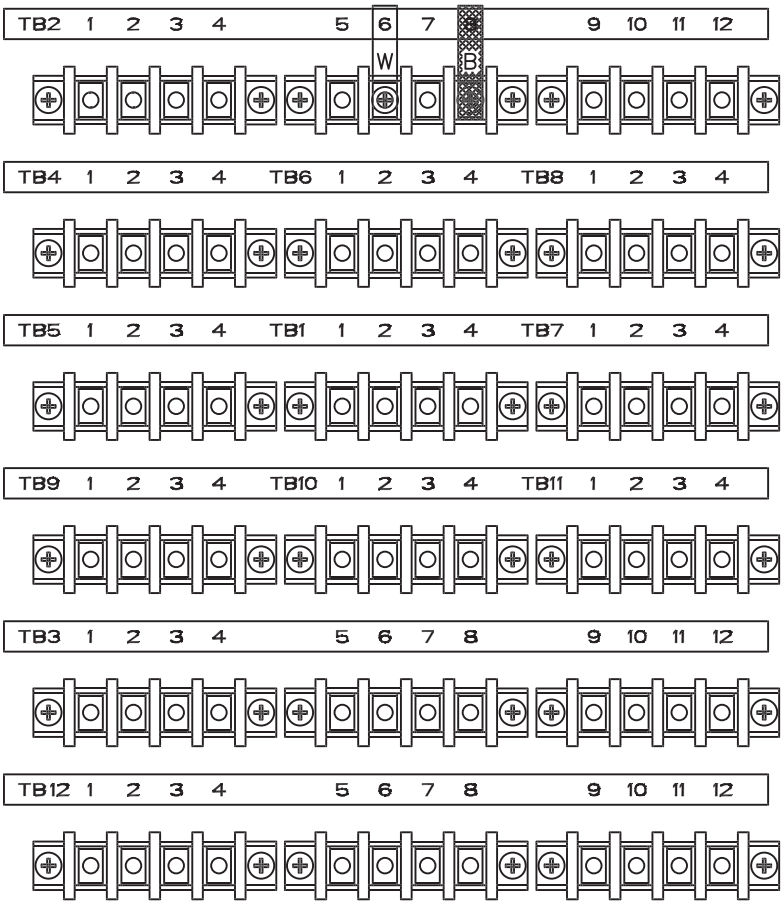

Un3 w3l)h: 9'-S" p1 lus l3)3ng lugs4
Re)urn Fan
Bag/Car)r3lge F3)er 6 - 12 IN. i 3le Load3ng
Q)y p(4123n. x 2(3n.
Q)y p842(3n. x 2(3n.
Pre F3)er : 2In. Fla) F3)er
Q)y p(4123n. x 2(3n.
Q)y p842(3n. x 2(3n.

Ch3led Wa)er 6 Row 11 FPI Double C3cu3 pq)y. 14
Draw-Thru i ut t ly Fan
0
Ot era)3ng we3gh): 7765.0 lbs.
Ut s)ream Corner We3gh) peach4 1828.0 lbs.
Downs)ream Corner We3gh) peach4 205(.0 lbs.

i t l3	A3way Leng)h	We3gh) pbs.4
p t l3 14	7'-1 1/16"	2087
p t l3 24	6'-9 1/16"	1585
p t l3 S4	('-(1/16"	2280
p t l3 (4	5'-6 1/16"	181S

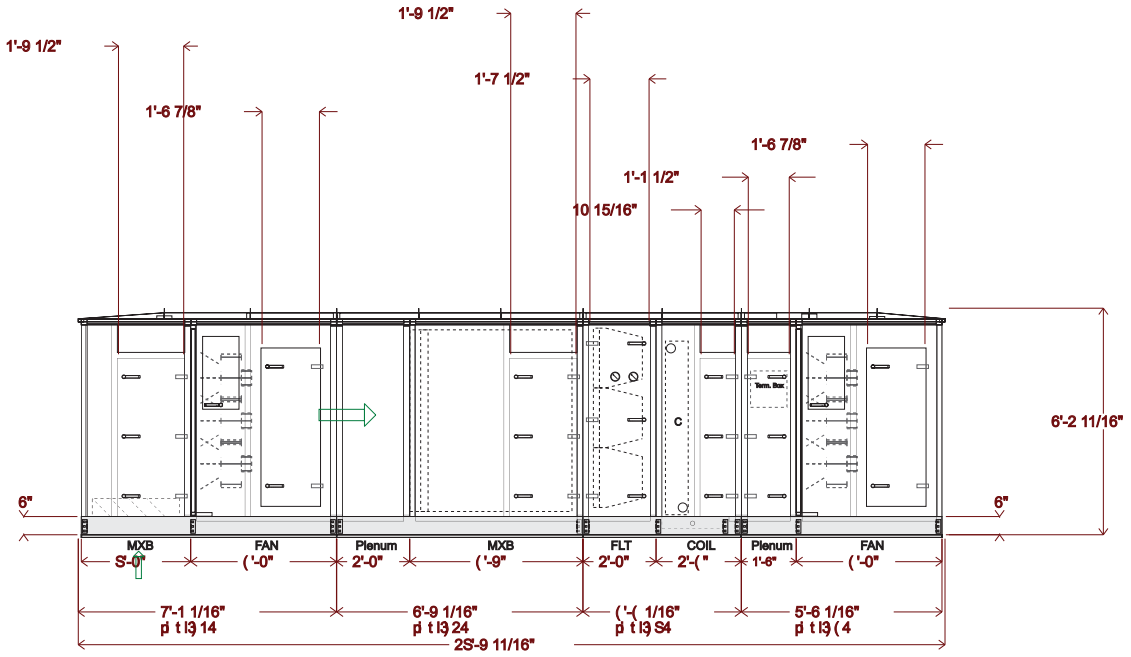

DATE	AHUBu3der	S9M Cen)ral i)a)3on A3-Handler, i 3ze S6W	REVIi ION
12/S0/202(	v7.06	i an Bernad3no Coun)y i herr3F i)a)3on AHU: AH (Assembly Draw3ng	i 3le V3ew

Carrier

THI DOCUMENT I THE PROPERTY OF CARRIER CORPORATION AND I DELIVERED UPON THE EXPRE I CONDITION THAT THE CONTENT I WILL NOT BE DI CLOI ED OR U ED WITHOUT CARRIER CORPORATION'I WRITTEN CONI ENT

I UBMI I ION OF THEI E DRAWINGI OR DOCUMENT I DOE I NOT CONI TITUTE PART PERFORMANCE OR ACCEPTANCE OF CONTRACT

S9MW

Unit viewed from right side of side elevation view.
Unit length: 2S'-9 11/16"
Return Fan
Bag/Cartridge Filter 6 - 12 IN. Side Loading
Qty [4123in. x 2(in.
Qty [842(in. x 2(in.
Pre Filter : 2In. Flat Filter
Qty [4123in. x 2(in.

Qty [842(in. x 2(in.
Chilled Water 6 Row 11 FPI Double Circuit Qty. 14
Draw-Thru Outdoor Fan
0
Operating weight): 7765.0 lbs.
Upstream Corner Weight) each4 1828.0 lbs.
Downstream Corner Weight) each4 205(.0 lbs.

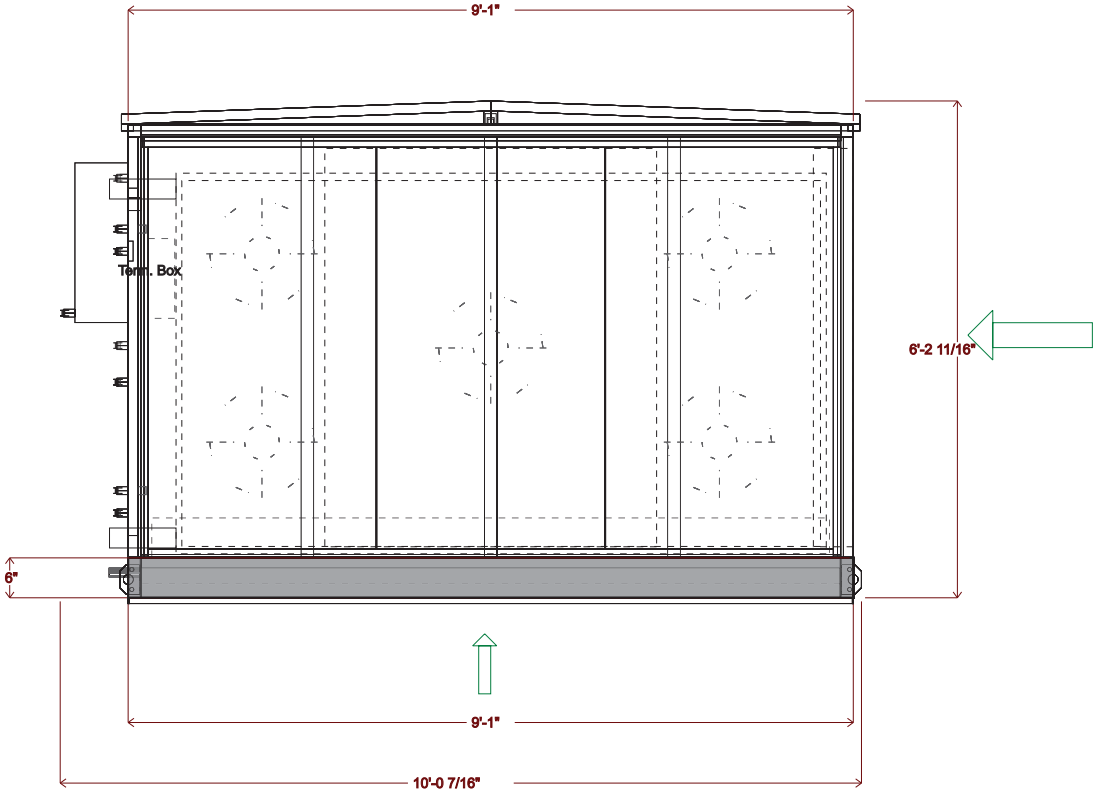

THIS DOCUMENT IS THE PROPERTY OF CARRIER CORPORATION AND IS DELIVERED UPON THE EXPRESS CONDITION THAT THE CONTENTS WILL NOT BE DISCLOSED OR USED WITHOUT CARRIER CORPORATION'S WRITTEN CONSENT

SUBMISSION OF THESE DRAWINGS OR DOCUMENTS DOES NOT CONSTITUTE PART PERFORMANCE OR ACCEPTANCE OF CONTRACT

S9MW

DATE	AHUBuilder	S9M Central Station AIR-Handler, Size S6W	REVISION
12/S0/202(	v7.06	San Bernadino County Sheriff Station AHU: AH (Assembly Drawing	End View

Unit height: 6'-2 5/16"
Return Fan
Bag/Cartridge Filter 6 - 12 IN. Inside Loading
Qty [4123in. x 2(3in.
Qty [842(3in. x 2(3in.
Pre Filter : 2In. Flat Filter
Qty [4123in. x 2(3in.
Qty [842(3in. x 2(3in.

Chilled Water 6 Row 11 FPI Double Circuit Qty. 14
Draw-Thru Input Fly Fan
0
Operating weight: 7765.0 lbs.
Upstream Corner Weight each 1828.0 lbs.
Downstream Corner Weight each 205(.0 lbs.

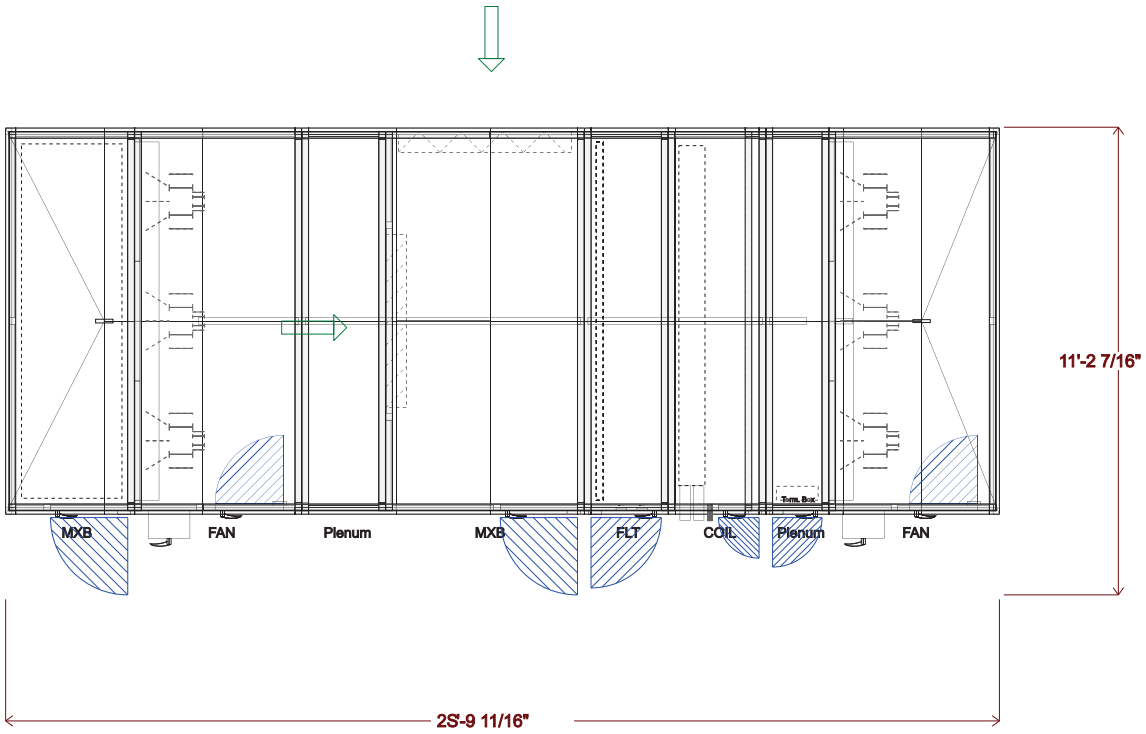

DATE	AHUBuilder	S9M Central Station Air-Handler, Size S6W	REVISION
12/S0/202(	v7.06	San Bernadino County Sheriff Station AHU: AH (Assembly Drawing	Top View

THIS DOCUMENT IS THE PROPERTY OF CARRIER CORPORATION AND IS DELIVERED UPON THE EXPRESS CONDITION THAT THE CONTENTS WILL NOT BE DISCLOSED OR USED WITHOUT CARRIER CORPORATION'S WRITTEN CONSENT

ISSUANCE OF THESE DRAWINGS OR DOCUMENTS DOES NOT CONSTITUTE PART PERFORMANCE OR ACCEPTANCE OF CONTRACT

S9MW

Ch3led Wa)er 6 Row 11 FPI Double C3cu3 ɱ)y. 14

P3 e	x	y	d3ame)er	Usage
A	16'-9 1/2"	S 1S/16"	1 1/2"	Dra3nPan
B	16'-2 5/16"	5'-1 7/16"	S"	CW Ou)le)
C	16'-6 1/("	9"	S"	CW Inle)

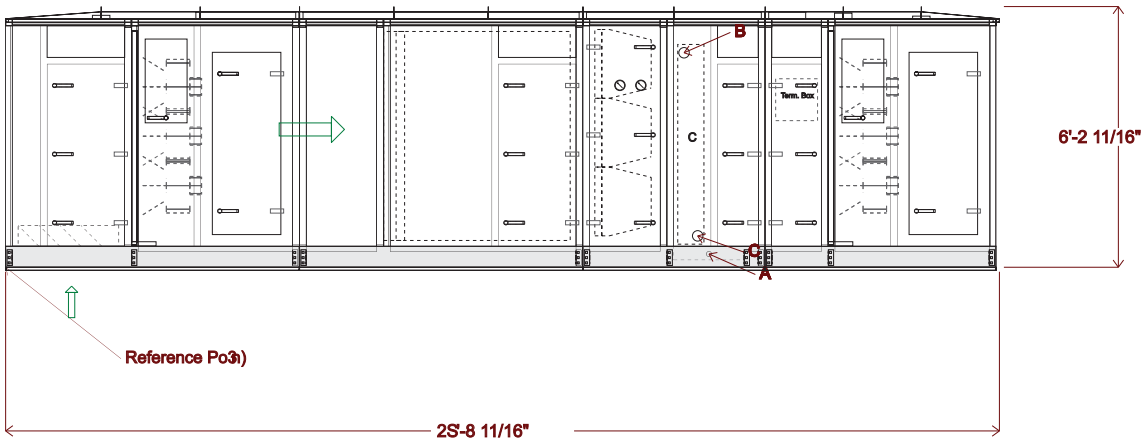

DATE	AHUBu3der	S9M Cen)ral i)a)3on A3-Handler, i 3ze S6W	REVIi ION
12/S0/202(	v7.06	i an Bernad3no Coun)y i herr3f i)a)3on AHU: AH (Assembly Draw3ng	i 3le V3ew

Carrier

THII DOCUMENT II THE PROPERTY OF CARRIER CORPORATION AND II DELIVERED UPON THE EXPREI I CONDITION THAT THE CONTENTI WILL NOT BE DII CLOI ED OR UI ED WITHOUT CARRIER CORPORATIONI WRITTEN CONI ENT

I UBMI I ION OF THEI E DRAWINGI OR DOCUMENTI DOEI NOT CONI TITUTE PART PERFORMANCE OR ACCEPTANCE OF CONTRACT

S9MW

DATE	AHUBu3der	S9M Cen)ral i)a)3on A3-Handler, i 3ze S6W	REVIi ION
12/S0/202(	v7.06	i an Bernad3no Coun)y i herr3f i)a)3on AHU: AH (M3x3ng Box	Tot V3ew

THII DOCUMENT II THE PROPERTY OF CARRIER CORPORATION AND II DELIVERED UPON THE EXPREI I CONDITION THAT THE CONTENTI WILL NOT BE DII CLOI ED OR UI ED WITHOUT CARRIER CORPORATIONI WRITTEN CONI ENT

I UBMI I ION OF THEI E DRAWINGI OR DOCUMENTI DOEI NOT CONI TITUTE PART PERFORMANCE OR ACCEPTANCE OF CONTRACT

S9MW

Unit viewed from right side of single elevation view.
Return Fan

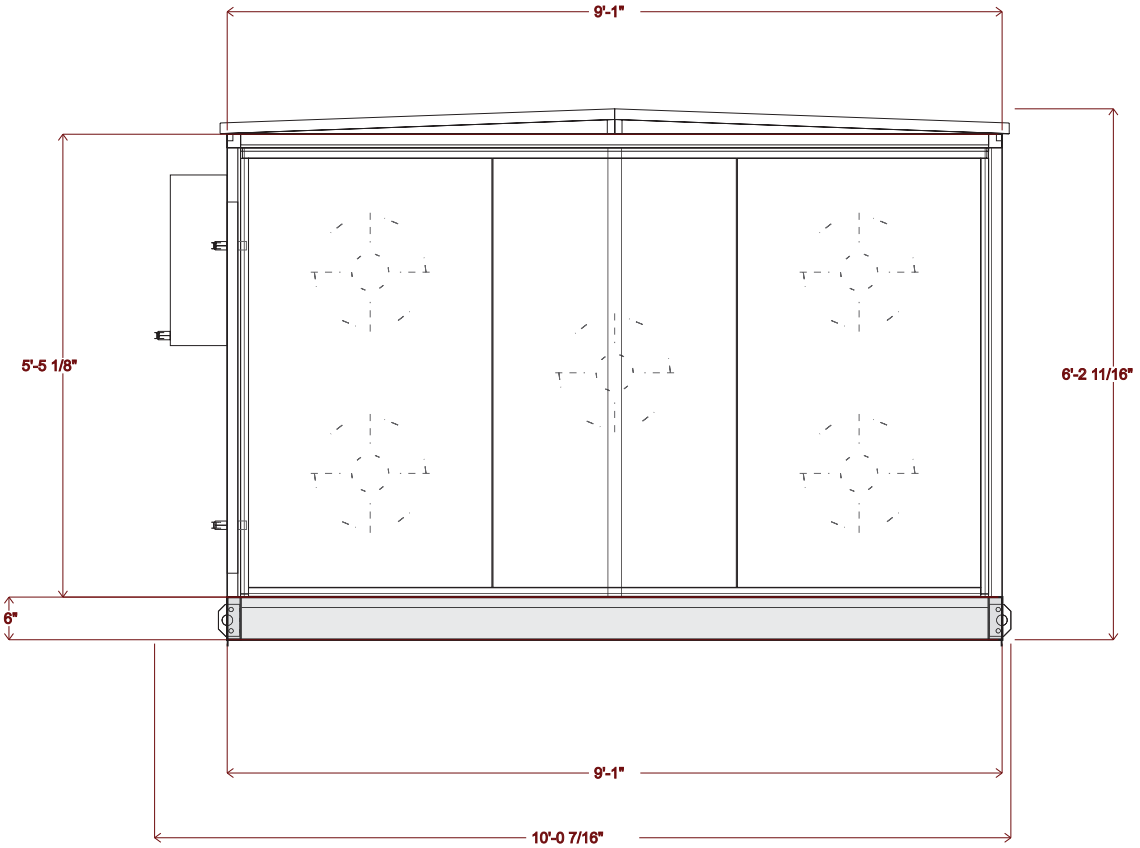

THIS DOCUMENT IS THE PROPERTY OF CARRIER CORPORATION AND IS DELIVERED UPON THE EXPRESS CONDITION THAT THE CONTENTS WILL NOT BE DISCLOSED OR USED WITHOUT CARRIER CORPORATION'S WRITTEN CONSENT

SUBMISSION OF THESE DRAWINGS OR DOCUMENTS DOES NOT CONSTITUTE PART PERFORMANCE OR ACCEPTANCE OF CONTRACT

S9MW

DATE	AHUBuilder	S9M Central Station Air-Handler, Size S6W	REVISION
12/30/2016	v7.06	San Bernardino County Sheriff Station AHU: AH (Return Fan	End View

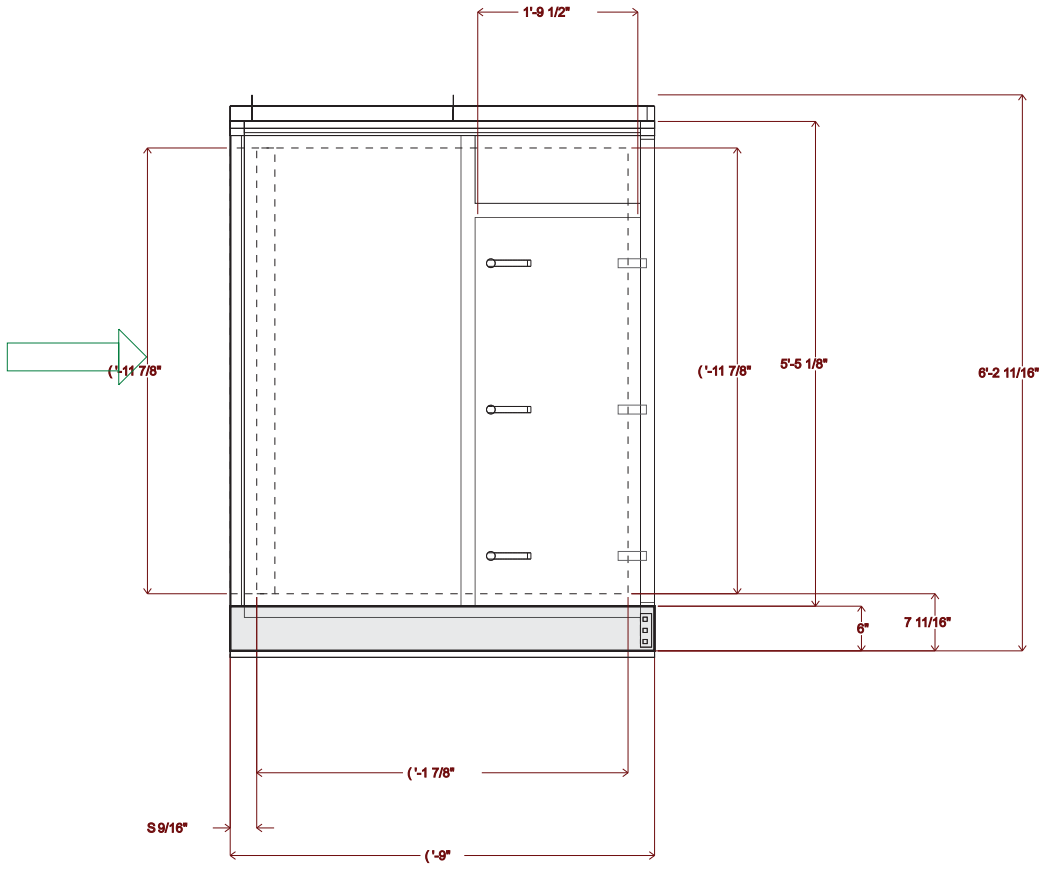

DATE	AHUBu3der	S9M Cen)ral i)a)3on A3-Handler, i 3ze S6W	REVIi ION
12/S0/202(	v7.06	i an Bernad3no Coun)y i herr3f i)a)3on AHU: AH (M3x3ng Box	i 3le V3ew

THI DOCUMENT II THE PROPERTY OF CARRIER CORPORATION AND II DELIVERED UPON THE EXPREI I CONDITION THAT THE CONTENTI WILL NOT BE DII CLOI ED OR UI ED WITHOUT CARRIER CORPORATIONI WRITTEN CONI ENT

I UBMI I ION OF THEI E DRAWINGI OR DOCUMENTI DOEI NOT CONI TITUTE PART PERFORMANCE OR ACCEPTANCE OF CONTRACT

S9MW

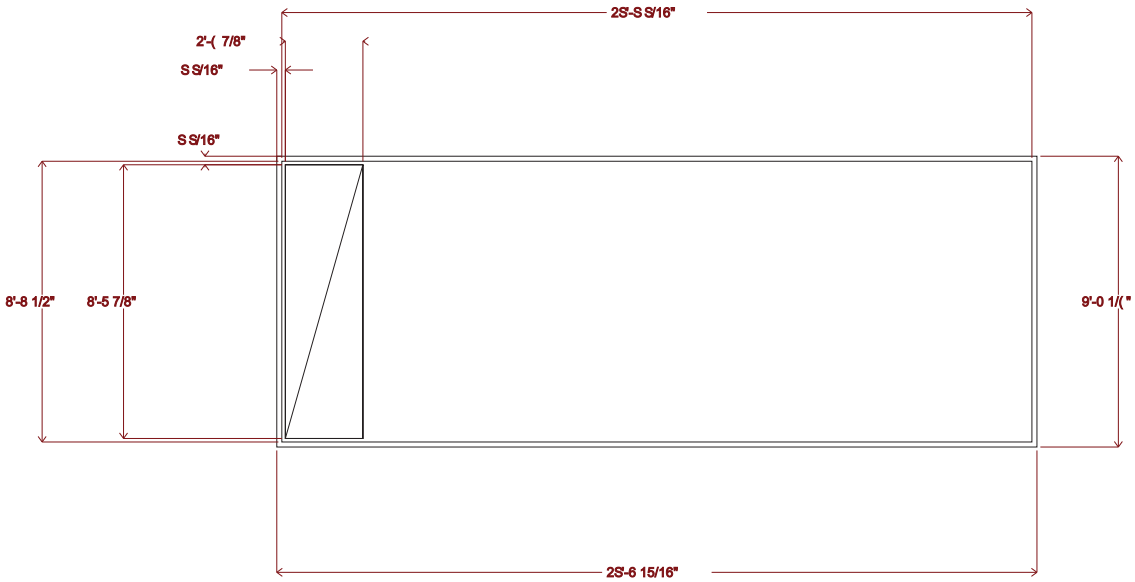

DATE	AHUBu3der	S9M Cen)ral i)a)3on A3-Handler, i 3ze S6W	REVIi ION
12/S0/202(	v7.06	i an Bernad3no Coun)y i herr3f i)a)3on AHU: AH (	Tot V3ew
		Ahu Curb	

Carrier

THI DOCUMENT I THE PROPERTY OF CARRIER CORPORATION AND I DELIVERED UPON THE EXPRE I CONDITION THAT THE CONTENT WILL NOT BE DI CLOI ED OR U ED WITHOUT CARRIER CORPORATION' WRITTEN CONI ENT

I UBMI I ION OF THEI E DRAWINGI OR DOCUMENT DOE NOT CONI TITUTE PART PERFORMANCE OR ACCEPTANCE OF CONTRACT

S9MW

DRAW-THRU

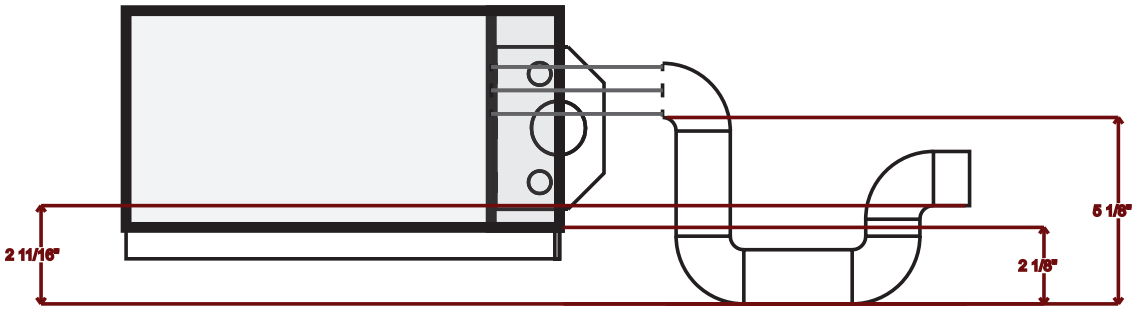

DATE	AHUBu3der	S9M Cen)ral I)a)3on A3-Handler, I 3ze S6W I an Bernad3no Coun)y I herr3 I)a)3on AHU: AH (Condensa)e Trat D3nens3ons	REVII ION
12/S0/202(	v7.06		End V3w

S9MW

I USM I ION OF THE E DRAWINGS OR DOCUMENTI DOE NOT CON TITUTE PART PERFORMANCE OR ACCEPTANCE OF CONTRACT

THE DOCUMENT E THE PROPERTY OF CARRIER CORPORATION AND E DELIVERED UPON THE EXPRE I CONDITION THAT THE CONTENTI WILL NOT BE DI CLOI ED OR U ED WITHOUT CARRIER CORPORATION' WRITTEN CON ENT

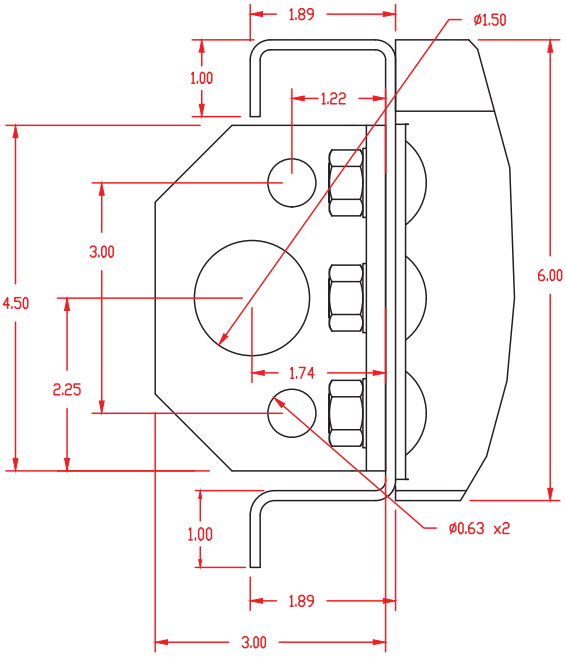

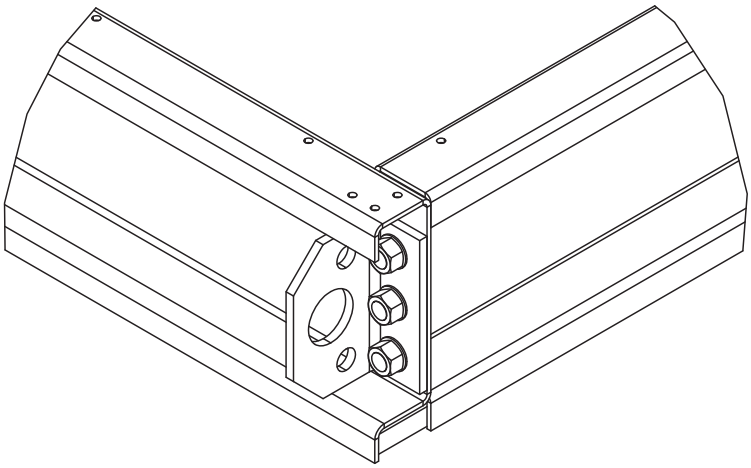

THIS DOCUMENT IS THE PROPERTY OF CARRIER CORPORATION AND IS DELIVERED UPON THE EXPRESS CONDITION THAT THE CONTENTS WILL NOT BE DISCLOSED OR USED WITHOUT CARRIER CORPORATION'S WRITTEN CONSENT

SUBMISSION OF THESE DRAWINGS OR DOCUMENTS DOES NOT CONSTITUTE PART PERFORMANCE OR ACCEPTANCE OF CONTRACT

39MW

DATE	AHUBuilder	39M Central Station Air-Handler, Size: 03 - 110	REVISION
2024-12-30	v7.06	6" Baserail and Lifting Lug Detail	

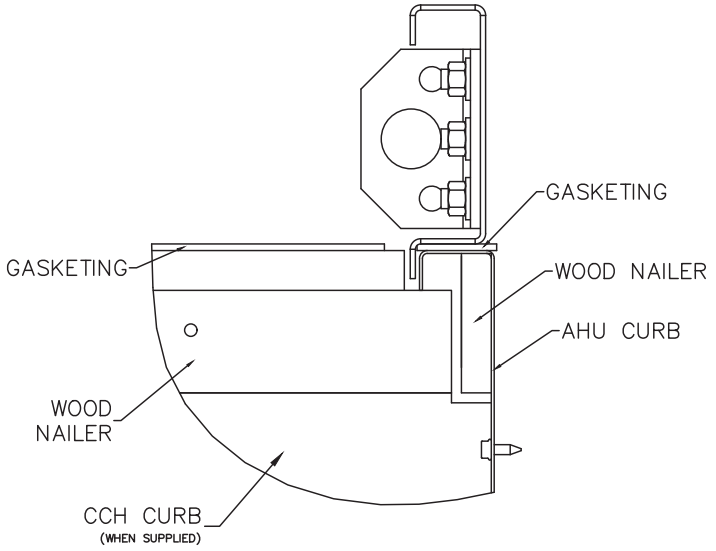

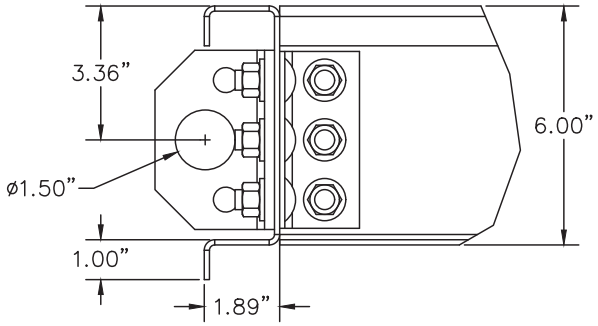

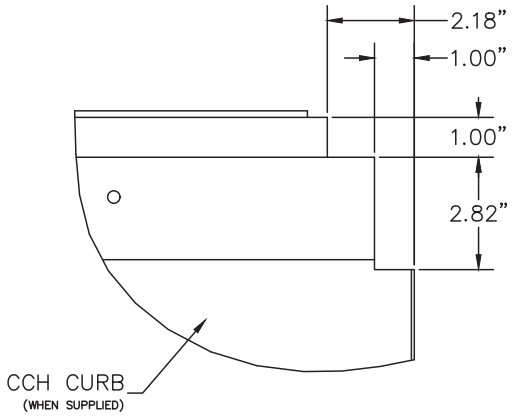

* 14" OR 24" STANDARD HEIGHT FLAT ROOF CURB

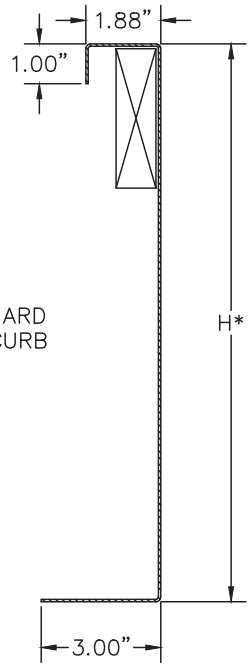

DATE	AHUBuilder	39M Central Station Air-Handler, Size: 03 - 110	REVISION
2024-12-30	v7.06	Curb, Baserail and Lifting Lug Detail	

THIS DOCUMENT IS THE PROPERTY OF CARRIER CORPORATION AND IS DELIVERED UPON THE EXPRESS CONDITION THAT THE CONTENTS WILL NOT BE DISCLOSED OR USED WITHOUT CARRIER CORPORATION'S WRITTEN CONSENT

SUBMISSION OF THESE DRAWINGS OR DOCUMENTS DOES NOT CONSTITUTE PART PERFORMANCE OR ACCEPTANCE OF CONTRACT

39MW

Carrier

THIS DOCUMENT IS THE PROPERTY OF CARRIER CORPORATION AND IS DELIVERED UPON THE EXPRESS CONDITION THAT THE CONTENTS WILL NOT BE DISCLOSED OR USED WITHOUT CARRIER CORPORATION'S WRITTEN CONSENT

SUBMISSION OF THESE DRAWINGS OR DOCUMENTS DOES NOT CONSTITUTE PART PERFORMANCE OR ACCEPTANCE OF CONTRACT

39M

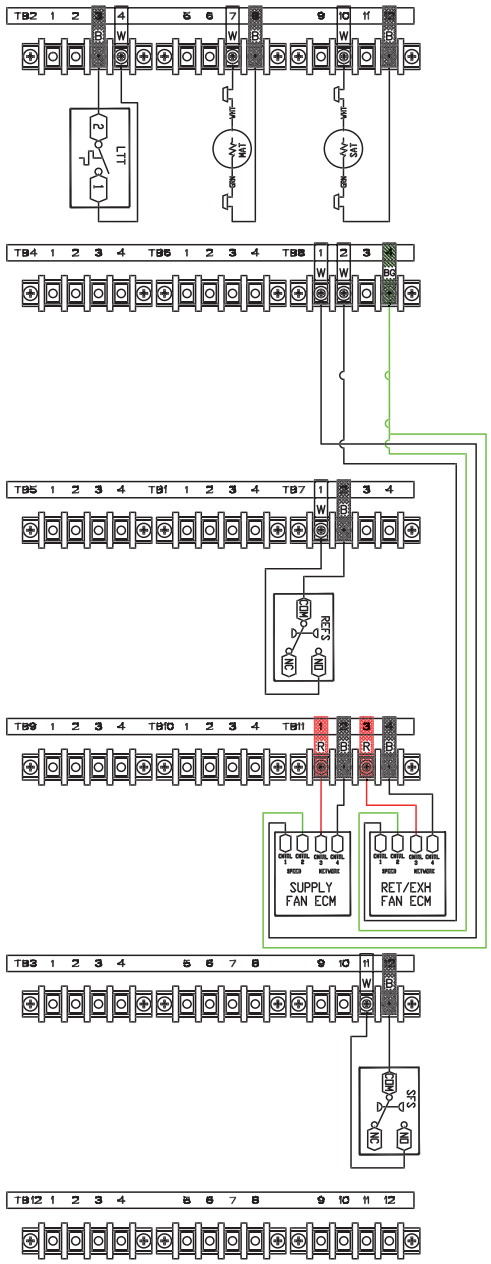

LEGEND:

	TERMINAL (MARKED)
	TERMINAL BLOCK
	SPLICE FIELD
———	WIRING FACTORY
– – –	WIRING FIELD CONTROL

A1/A2	24VAC CONTACTOR COIL
BG	BLACK OR GREEN
CCV	COOLING COIL VALVE*
COM	COMMON
EF	EXHAUST FAN
EHEAT	ELECTRIC HEATER
ERV	ENERGY RECOVERY WHEEL
EXD	EXHAUST AIR DAMPER
FBD	FACE & BYPASS DAMPER
FLTS	FILTER STATUS SWITCH
FLTS2	FILTER STATUS SWITCH 2
HCV	HEATING COIL VALVE*
HDT	HOT DECK TEMPERATURE
HUM	HUMIDIFIER ENABLE
LTT	LOW TEMPERATURE THERMOSTAT (FREEZSTAT)
MAD	MIXED AIR DAMPER
MAT	MIXED AIR TEMPERATURE
NC	NORMALLY CLOSED
NO	NORMALLY OPEN
OAD	OUTDOOR AIR DAMPER
PHEAT	PRE-HEAT
PHV	PRE-HEAT VALVE*
RAD	RETURN AIR DAMPER
RFFS	RETURN/EXHAUST FAN STATUS
RF	RETURN FAN
SAT	SUPPLY AIR TEMPERATURE
SCR	SILICON CONTROLLED RECTIFIER
SF	SUPPLY FAN
SFS	SUPPLY FAN STATUS
SI	SIGNAL IN
S/S	START/STOP
TB	TERMINAL BLOCK TERMINAL
VFD	VARIABLE FREQUENCY DRIVE
*	FIELD SUPPLIED

REVISION

39M Central Station Air Handler, Size: 03 - 110
Factory Wired Controller Wiring Diagram

AHUBuilder
v7.06

DATE
2024-12-30

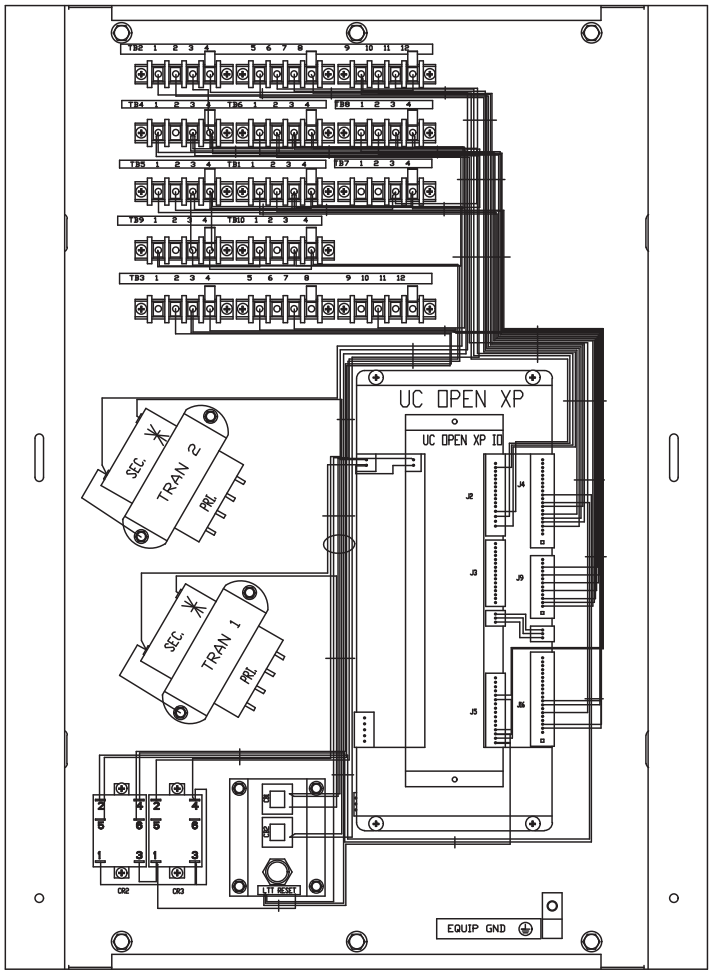

SIZE 03-06 (SHOWN)

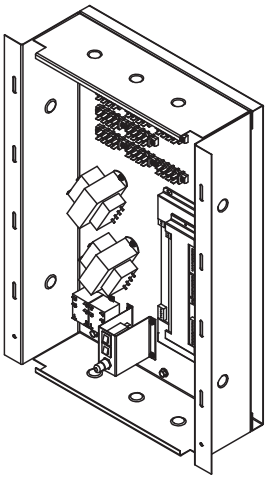

Component wiring for reference only.
When components are factory installed, wiring will be factory installed unless otherwise noted.
When components are provided by the factory for field installation, wiring is not included or installed.

THIS DOCUMENT IS THE PROPERTY OF CARRIER CORPORATION AND IS DELIVERED UPON THE EXPRESS CONDITION THAT THE CONTENTS WILL NOT BE DISCLOSED OR USED WITHOUT CARRIER CORPORATION'S WRITTEN CONSENT

SUBMISSION OF THESE DRAWINGS OR DOCUMENTS DOES NOT CONSTITUTE PART PERFORMANCE OR ACCEPTANCE OF CONTRACT

39M

DATE	AHUBuilder	39M Central Station Air-Handler, Size: 03 - 110	REVISION
2024-12-30	v7.06	Factory Wired Controller	

POWER WIRING DIAGRAM
ECM FAN 3 PHASE

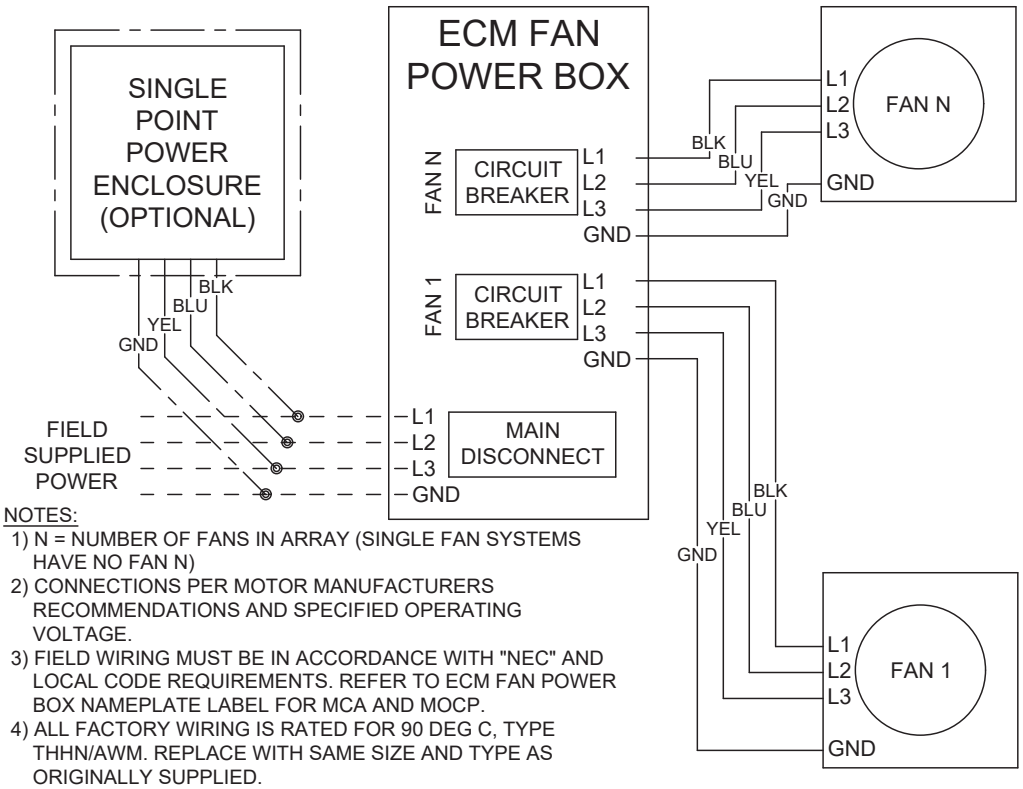

NOTES:

1) N = NUMBER OF FANS IN ARRAY (SINGLE FAN SYSTEMS HAVE NO FAN N)
2) CONNECTIONS PER MOTOR MANUFACTURERS RECOMMENDATIONS AND SPECIFIED OPERATING VOLTAGE.
3) FIELD WIRING MUST BE IN ACCORDANCE WITH "NEC" AND LOCAL CODE REQUIREMENTS. REFER TO ECM FAN POWER BOX NAMEPLATE LABEL FOR MCA AND MOCP.
4) ALL FACTORY WIRING IS RATED FOR 90 DEG C, TYPE THHN/AWM. REPLACE WITH SAME SIZE AND TYPE AS ORIGINALLY SUPPLIED.
5) USE COPPER CONDUCTOR SUPPLY WIRES ONLY

FACTORY WIRING
FIELD WIRING
OPTIONAL WIRING/EQUIPMENT
GND — GREEN, GREEN-YELLOW, OR BARE COPPER

39MA51010016 REV:B

Component wiring for reference only. When components are factory installed, wiring will be factory installed unless otherwise noted. When components are provided by the factory for field installation, wiring is not included or installed.

THIS DOCUMENT IS THE PROPERTY OF CARRIER CORPORATION AND IS DELIVERED UPON THE EXPRESS CONDITION THAT THE CONTENTS WILL NOT BE DISCLOSED OR USED WITHOUT CARRIER CORPORATION'S WRITTEN CONSENT

SUBMISSION OF THESE DRAWINGS OR DOCUMENTS DOES NOT CONSTITUTE PART PERFORMANCE OR ACCEPTANCE OF CONTRACT

39M

DATE	AHUBuilder	39M Central Station Air-Handler, Size: 03 - 110	REVISION
2024-12-30	v7.06	ECM Three Phase Wiring Detail	

CONTROLS WIRING DIAGRAM
ECM FAN, EBM-PAPST

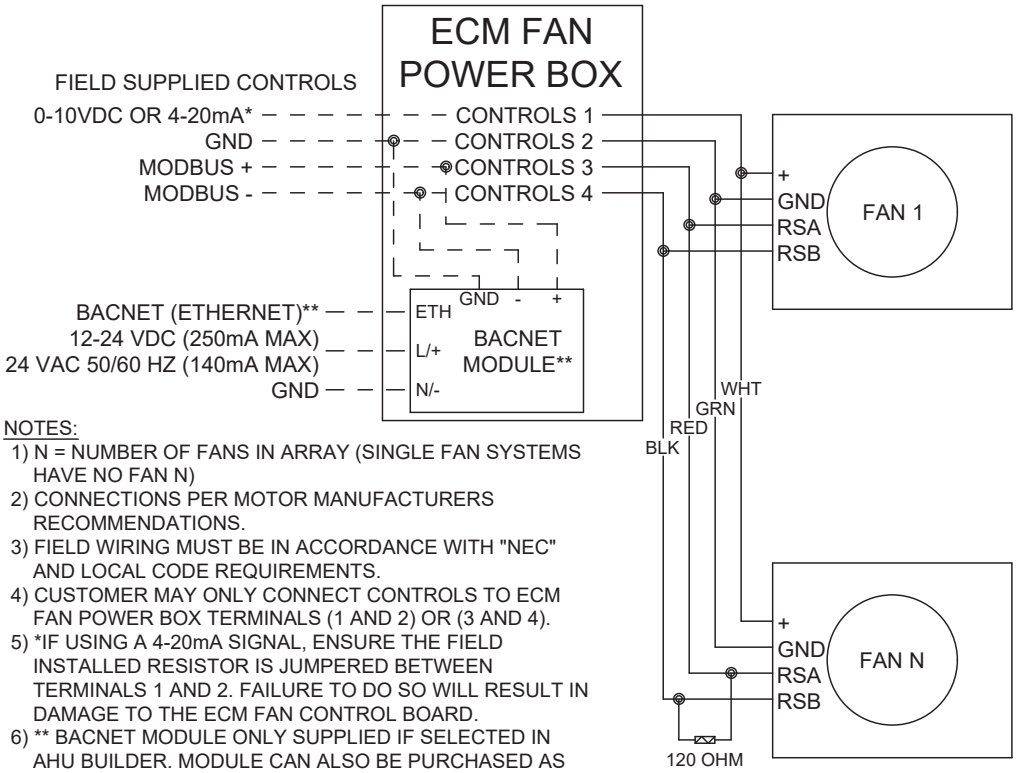

NOTES:

1) N = NUMBER OF FANS IN ARRAY (SINGLE FAN SYSTEMS HAVE NO FAN N)
2) CONNECTIONS PER MOTOR MANUFACTURERS RECOMMENDATIONS.
3) FIELD WIRING MUST BE IN ACCORDANCE WITH "NEC" AND LOCAL CODE REQUIREMENTS.
4) CUSTOMER MAY ONLY CONNECT CONTROLS TO ECM FAN POWER BOX TERMINALS (1 AND 2) OR (3 AND 4).
5) *IF USING A 4-20mA SIGNAL, ENSURE THE FIELD INSTALLED RESISTOR IS JUMPERED BETWEEN TERMINALS 1 AND 2. FAILURE TO DO SO WILL RESULT IN DAMAGE TO THE ECM FAN CONTROL BOARD.
6) ** BACNET MODULE ONLY SUPPLIED IF SELECTED IN AHU BUILDER. MODULE CAN ALSO BE PURCHASED AS AN ACCESSORY AND FIELD INSTALLED.

+ AIN 1 U / IO2, MOTOR SPECIFIC
FACTORY WIRING
FIELD WIRING

39MA51010018 REV:C

Component wiring for reference only. When components are factory installed, wiring will be factory installed unless otherwise noted. When components are provided by the factory for field installation, wiring is not included or installed.

THIS DOCUMENT IS THE PROPERTY OF CARRIER CORPORATION AND IS DELIVERED UPON THE EXPRESS CONDITION THAT THE CONTENTS WILL NOT BE DISCLOSED OR USED WITHOUT CARRIER CORPORATION'S WRITTEN CONSENT

SUBMISSION OF THESE DRAWINGS OR DOCUMENTS DOES NOT CONSTITUTE PART PERFORMANCE OR ACCEPTANCE OF CONTRACT

39M

DATE	AHUBuilder	39M Central Station Air-Handler, Size: 03 - 110	REVISION
2024-12-30	v7.06	ECM Controls Wiring Diagram - EBM Pabst	

Air Filter Submittal

Project: San Bernadino County Sherriff Station AHU
Unit Tag: AH 4

Carrier Part Number	31KB50412240824244
Kit Description	Filter Kit
Unit Airflow, CFM	18000
Filter Velocity, FPM	450
Filter Sizes and Quantities	Qty (4) 12in. x 24in., Qty (8) 24in. x 24in.

DFpro

Synthetic Cartridge Filter

DFpro rigid filters are designed to provide consistent high efficiency filtration in constant and variable air volume systems. Deep pleats are held firmly in place with plastic separators and expanded metal backing. Every edge of the media pack is glued inside the periphery of the frame to prevent air and dust bypass. The media and separators are 100% polypropylene to resist moisture damage, microbial growth, and puncture damage. Heavy gauge galvanized frame resists corrosion and maintains its structural integrity for extended months of service.

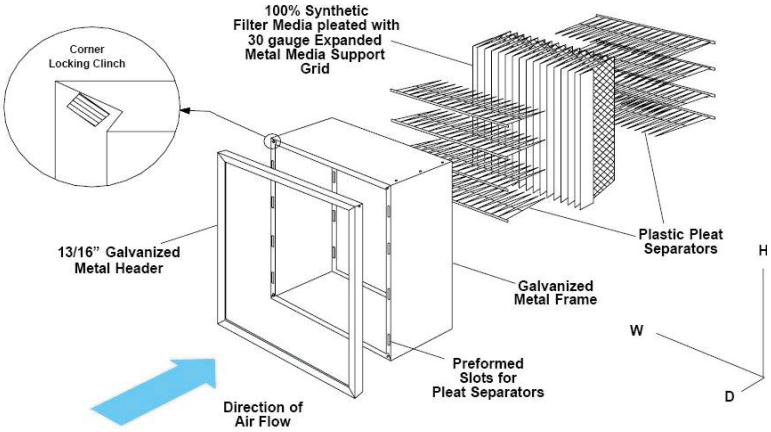

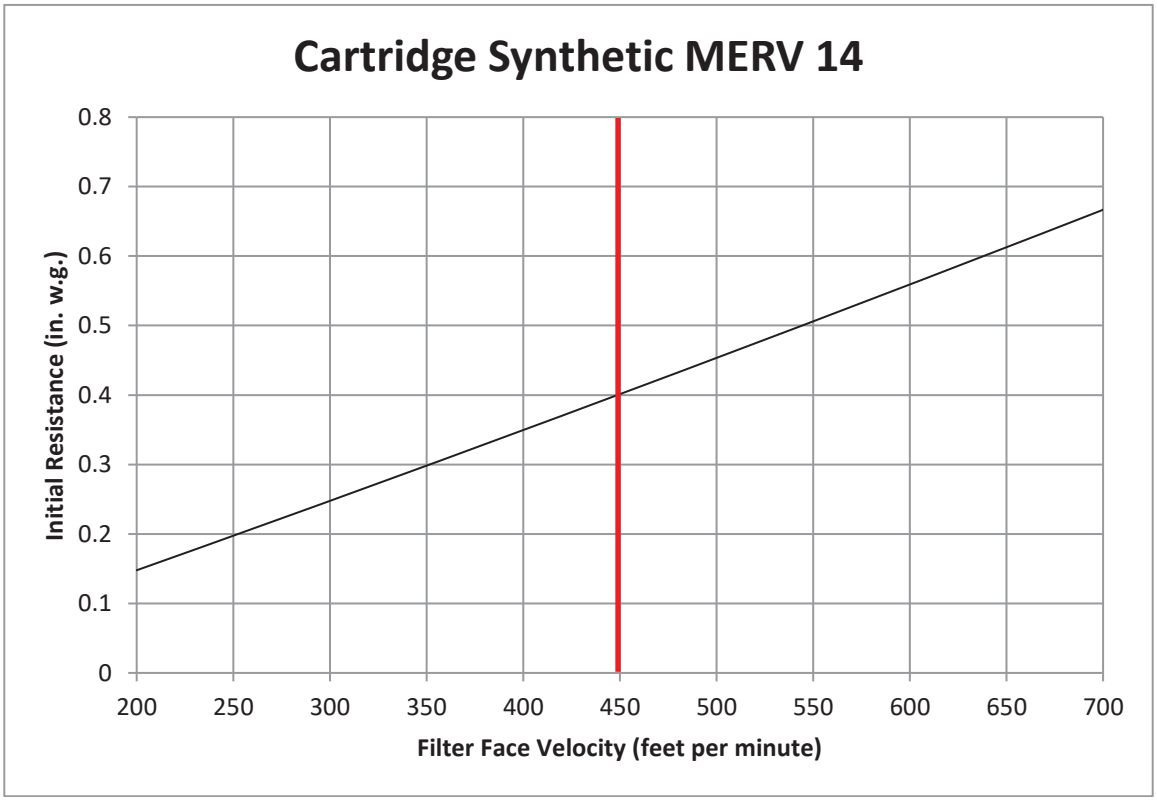

Air Filter Submittal

Project: San Bernadino County Sherriff Station AHU
Unit Tag: AH 4

Carrier Part Number	31K2C0412240824244
Kit Description	Filter Kit
Unit Airflow, CFM	18000
Filter Velocity, FPM	450
Filter Sizes and Quantities	Qty (4) 12in. x 24in., Qty (8) 24in. x 24in.

DFpro

MERV 13 Pleated Filter

The 100% synthetic graduated density media is continuously bonded to a 30 gauge galvanized, corrosion resistant, expanded metal support grid with an effective open area of 96%. The media is resistant to a wide range of chemicals, does not absorb moisture and will not support microbial growth.
The controlled pleat spacing maximizes surface area and dust holding capacity and is bonded to the enclosure frame to prevent dust bypass. The enclosure frame is constructed of high wet strength moisture resistant beverage board. The diagonal support members of the frame are bonded to the entering and exiting apexes of each pleat to prevent pleat collapse and filter bowing.

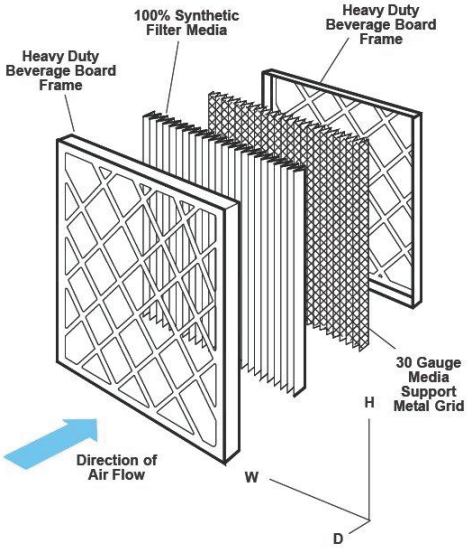

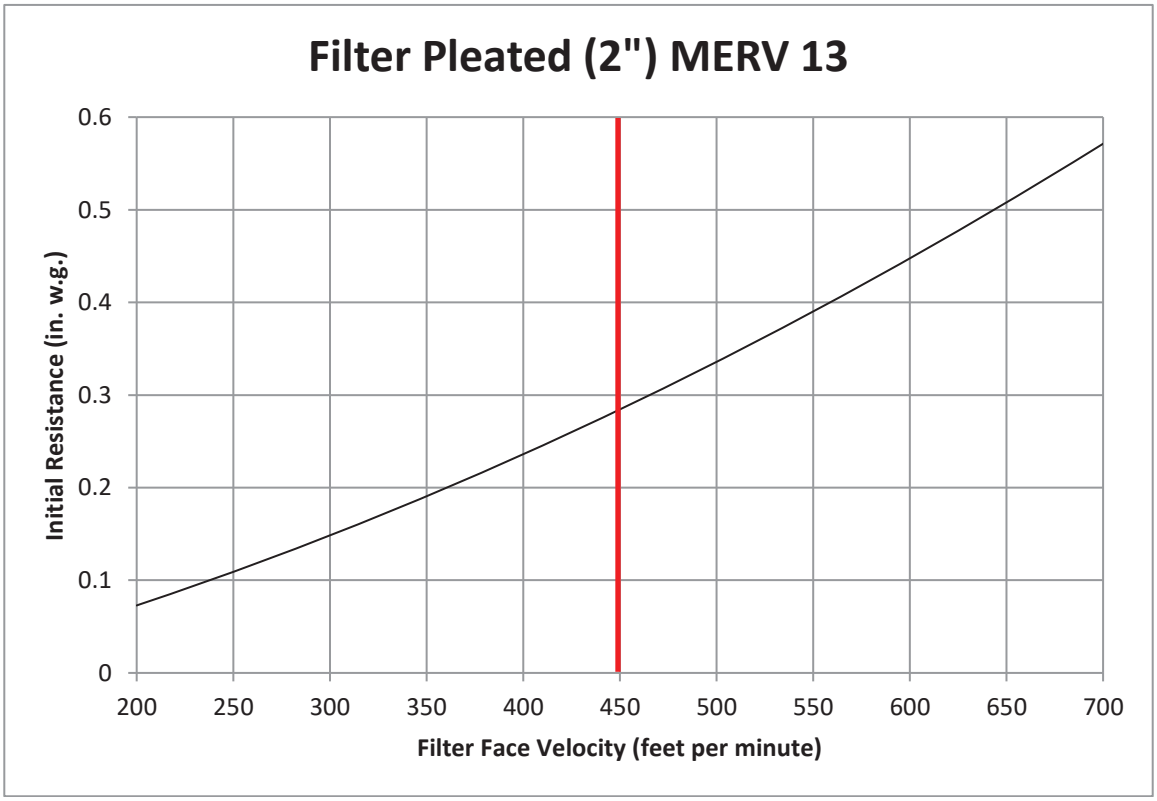

Unit Report AH 5

Project: San Bernadino County Sherriff Station AHU
Unit Tag: AH 5

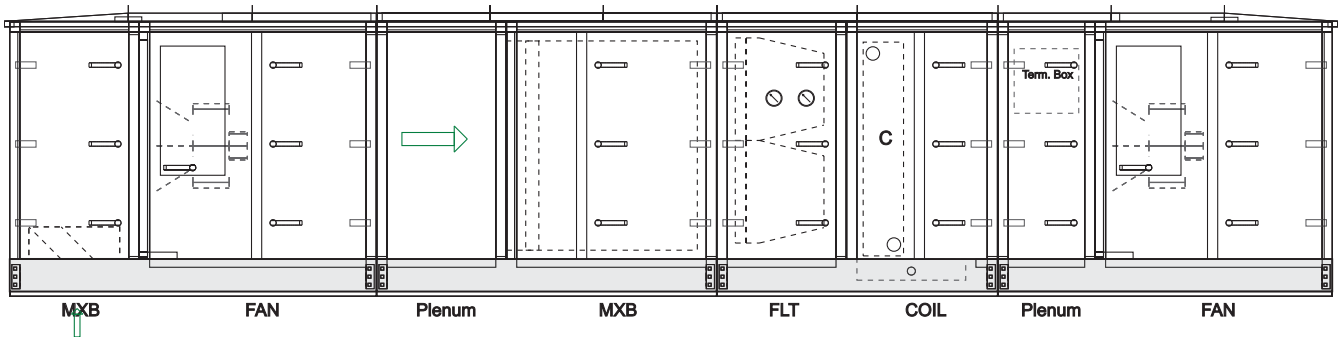

Unit Parameters

Aero Outdoor Air Handler
39MW Size 17W
Insulation: R-13 Double Wall Sealed Panel
Exterior Finish: Painted Exterior Panels
Interior Finish: Galvanized Interior Panels
Level II Thermal Break
6 inch tall Base Rail
Field Supplied Curb

Mixing Box

Damper: Bottom Premium Parallel
Door Right Side

Return Fan

Shipping Split After
Rear Inlet
Fan Sled
- Plenum Fan B PEBM0105
- Direct Drive Fans
- Fan Count 3
- 1933 fanRPM Class III
- Full Open Discharge
- ECM Control Box (Standard)
- Piezometer and Transducer (1 fan)
- Voltage Selected - 460/3/60
- Full Load Amps - 7.7 Each
- FLA/MCA/MOCP 23.1/25.0/30

Return/Exhaust Fan Status (DI)
Door Right Side

Plenum

Length 24 inches

Mixing Box

Shipping Split After
Damper: Left Side Premium Opposed
Damper: Rear Premium Parallel
Mixed Air Temperature Sensor (AI)
Door Right Side

Bag/Cartridge Filter

Bag/Cartridge Filter 6 - 12 IN. Side Loading
12" Cartridge w/ Header (Synthetic) MERV 14
Qty (3) 24in. x 24in.
Qty (3) 12in. x 24in.
Pre Filter : 2In. Flat Filter
2" Pleated MERV 13 Filter
Qty (3) 24in. x 24in.
Qty (3) 12in. x 24in.
Door Right Side
Minihelic Differential Pressure Gage 0-2" w.c. Right Side
Minihelic Differential Pressure Gage 0-2" w.c. Right Side

Chilled Water Coil and Plenum

Shipping Split After
Low Temperature Thermostat (DI)
304 Stainless Steel Drain Pan Right Side
Chilled Water 16.93 sq.ft 6 Row 11 FPI Full Circuit
Coil Connection Right Side
1/2 in. Tube Diameter
Fin Thickness: 0.0060
AL fins Galv. Casing
Steel Header
No Coating
Door Right Side

Control Plenum

Length 18 inches
Unprogrammed Carrier UC Open XP Controller Located in Control Plenum
Door Right Side

Draw-Thru Supply Fan

Rear Inlet
Fan Sled
Plenum Fan B PEBM0105
Direct Drive Fans
Fan Count 3
2969 fanRPM Class III
Field Supplied Discharge
ECM Control Box (Standard)
Piezometer and Transducer (1 fan)
Voltage Selected - 460/3/60
Full Load Amps - 7.7 Each
FLA/MCA/MOCP 23.1/25.0/30
Supply Fan Status (DI)
Supply Air Temperature Sensor (AI)
Door Right Side

Weights and Dimensions

(LxWxH in ft in) 20' 8" x 6' 9" x 4' 5" **
Operating 4463 LB **

Warranty Part Number(s) (NET PRICING)

39LMR-SU-FIRST Qty 1.0 First 39 Series Start-up

Configuration Notes

An Outdoor Plenum fan may not discharge through the roof of the unit.

If a bottom connection is required, use an Inlet Plenum Section.

An Outdoor Plenum fan may not discharge through the roof of the unit.

Discharge duct(s) must be gasketed and screwed directly to the discharge panel of the unit.

Warranty Part Number(s) (NET PRICING)

QTY 1.0 First 39 Series Start-up

** Weights and Dimensions are approximate. Weights include base unit weight, coils (wet & dry), fans and fan motors, and other components, but does not include filters, drives and skids. Approximate dimensions are provided primarily for shipping purposes, for exact dimensions, refer to submittal drawings. Shipping skids are not included.

All filter media efficiency ratings are for the filter media only.

Chilled Water Coil Performance Summary

Project: San Bernadino County Sherriff Station AHU
Unit Tag: AH 5

Cooling Application's Balance Criteria: Fluid Flow

Coil Model	**28MC**	
Number of Coils	**1**	
Row / FPI / Circ	**6 / 11 / FL**	
Fin Thickness	**.0060**	in
Fin Type	**Sine Wave**	
Face Area Type	**Large**	
Coil Face Area	**16.93**	sqft
Face Velocity	**484.3**	fpm
Fin-Casing Material	**Al-Galv.**	
Tube Diameter	**0.5**	in
Tube spacing: Stf x Str	**1.25 x 0.781**	in
Tube Wall Thickness	**0.016**	in
Actual Airflow	**8200**	CFM
Site Altitude	**0**	ft
Standard Airflow (adj. to std. dry atmosphere)	**7845**	SCFM
Total Cooling Capacity	**332.90**	MBH
Sensible Cooling Capacity	**260.63**	MBH
Fluid Flow Rate	**44.3**	gpm
Fluid Pressure Drop	**4.6**	ft wg
Fluid Velocity	**2.5**	ft/s
Entering Fluid Temperature	**43.00**	F
Leaving Fluid Temperature	**57.99**	F
Fluid Temperature Rise	**15.0**	F
Entering Air Dry Bulb	**84.70**	F
Entering Air Wet Bulb	**67.80**	F
Entering Air Enthalpy	**32.11**	BTU/lb
Leaving Air Dry Bulb	**54.48**	F
Leaving Air Wet Bulb	**54.04**	F
Leaving Air Enthalpy	**22.6**	BTU/lb
Air Friction	**0.76**	in wg
Brine	**FW**	
Brine Concentration	**0**	%
Fouling Factor	**0.0**	(hr-sqft-F)/BTU

NOTE: Certified in accordance with the AHRI Forced-Circulation Air-Cooling and Air-Heating Coils Certification Program which is based on AHRI Standard 410 within the Range of Standard Rating Conditions listed in Table 1 of the Standard. Certified units may be found in the AHRI Directory (www.ahridirectory.org).

LEGEND:
- Stf -- Tube spacing across coil face
- Str -- Tube spacing in direction of airflow

Unit Acoustics Summary

Project: San Bernadino County Sherriff Station AHU
Unit Tag: AH 5

Unit Acoustics Sound Power Level:

	Discharge	Inlet	Casing
63 Hz	84	78	77
125 Hz	85	81	79
250 Hz	97	94	91
500 Hz	97	92	89
1000 Hz	98	88	85
2000 Hz	95	84	81
4000 Hz	90	83	80
8000 Hz	85	77	74

Sound power levels are rated in accordance with AMCA 300.

Unit Acoustics A-weighted Sound Power Level:

	Discharge	Inlet	Casing
63 Hz	58	52	51
125 Hz	69	64	62
250 Hz	89	85	83
500 Hz	93	89	86
1000 Hz	98	88	85
2000 Hz	97	86	82
4000 Hz	91	84	81
8000 Hz	83	76	73

Sound power levels are rated in accordance with AMCA 300.

Sound contributed by Supply and Return Fans
Unit Acoustics PART-LOAD Sound Power Level:

	Discharge	Inlet	Casing
63 Hz	81	76	74
125 Hz	82	78	76
250 Hz	94	90	88
500 Hz	92	86	83
1000 Hz	94	85	82
2000 Hz	91	81	77
4000 Hz	85	79	75
8000 Hz	78	71	68

Sound power levels are rated in accordance with AMCA 300.

Unit Acoustics Summary

Project: San Bernadino County Sherriff Station AHU
Unit Tag: AH 5

Unit Acoustics PART-LOAD A-weighted Sound Power Level:

	Discharge	Inlet	Casing
63 Hz	**55**	**49**	**48**
125 Hz	**66**	**62**	**59**
250 Hz	**85**	**82**	**79**
500 Hz	**89**	**83**	**80**
1000 Hz	**94**	**85**	**82**
2000 Hz	**92**	**82**	**79**
4000 Hz	**86**	**80**	**76**
8000 Hz	**77**	**70**	**67**

Sound power levels are rated in accordance with AMCA 300.

Sound contributed by Supply and Return Fans

Return Fan Performance Summary

Project: San Bernadino County Sherriff Station AHU
Unit Tag: AH 5

Fan Model	**NC-39M1703HPEE**
Unit Size	**17W**
Fan Type **ECM**	
DIRECT DRIVE PLENUM (EBM-05) (Return)	
Fan Wheel Diameter	**15.7**
Fan Class	**III**
Static Efficiency (%)	**66**
Fan Application	**Return Fan**
Orientation	**Horizontal**
Actual Airflow, CFM	**7200**
Site Altitude, , ft	**0**
Total Upstream Static Losses, in wg	**1.78**
Number of Fans	**3**
Fan RPM / Max RPM	**1933/3700**
Each Fan BHP	**1.0**
Fan Total BHP	**3.0**
(n-1) Airflow, CFM	**10725**
(n-1) Redundancy (%)	**149**
Fan Electrical Power, kW	**2.9**
ECM Setting, VDC	**5.2**

Unit is outside of the scope of AHRI Standard 430/431.

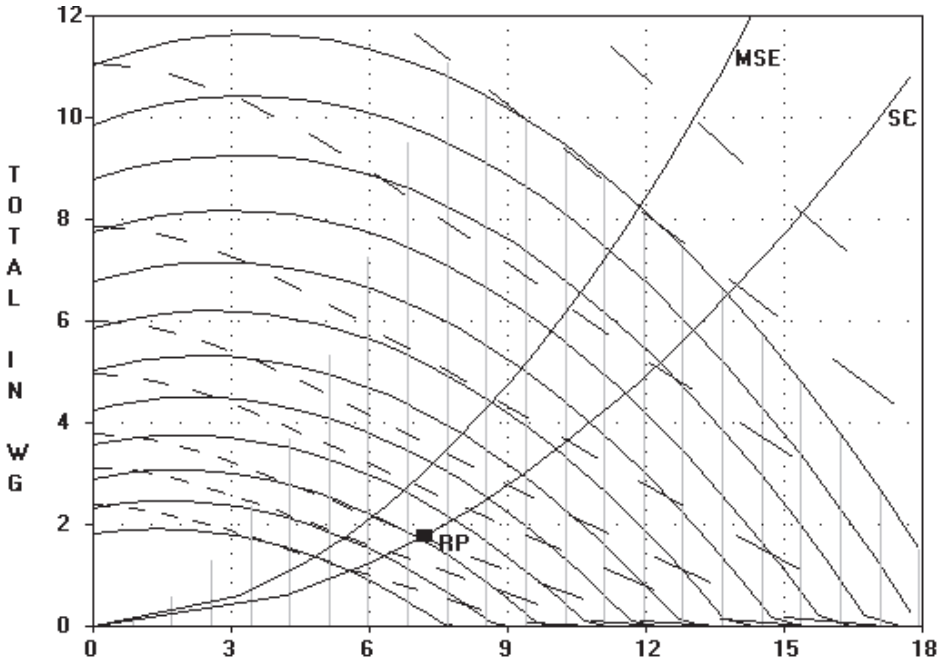

Legend:

\ - RPM \ - BHP MSE - Max. Static Eff. SC - System Curve RP - Rated Point

RPM = 1933 BHP = 3.0 CLASS III MAX. RPM = 3700

RPM's (x 100, L to R): 15. 17. 19. 21. 23. 25. 27. 29. 31. 33. 35. 37.

BHP's (L to R): 1.5 2.3 3 4.5 6 9 15 22.5 30

Supply Fan Performance Summary

Project: San Bernadino County Sherriff Station AHU
Unit Tag: AH 5

Fan Model	**39M1703HPEE-U**
Unit Size	**17W**
Fan Type	**ECM DIRECT DRIVE PLENUM (EBM-05)**
Fan Wheel Diameter	**15.7**
Fan Class	**III**
Fan Application	**Supply Fan**
Orientation	**Horizontal**
Actual Airflow, CFM	**8200**
Site Altitude, ft	**0**
Upstream Ext. Static, in wg	**0.00**
Downstream Ext. Static, in wg	**4.50**
Cooling Coil Static, in wg	**0.76**
Heating Coil Static, in wg	**0.00**
Total Accessory Static, in wg	**0.84**
Total Static Pressure, in wg	**6.10**
Calculated Fan RPM / Motor RPM	**2969 / 0**
Class III Max. RPM	**3700**
Static Efficiency (%)	**67**
Number of Fans	**3**
Each Fan BHP	**3.9**
Fan Total BHP	**11.8**
(n-1) Airflow, CFM	**8820**
(n-1) Redundancy (%)	**108**
Fan Electrical Power, kW	**10.1**
ECM Setting, VDC	**8.0**

AHRI CERTIFIED®
www.ahridirectory.org
Central Station Air-Handling Unit Supply Fans
AHRI Standard 430/431

Accessories:
(1) Flat Synthetic (2") MERV 13 [0.33]
(1) CARTRIDGE LONG/SHORT Synthetic MERV 14 [0.42]
(1) Side Mixing or Exhaust Box [0.10]

NOTE: Certified in accordance with the AHRI Central Station Air-Handling Unit Certification Program, which is based on AHRI Standards 430/431. Certified units may be found in the AHRI Directory at www.ahridirectory.org

Supply Fan Performance Summary

Project: San Bernadino County Sherriff Station AHU
Unit Tag: AH 5

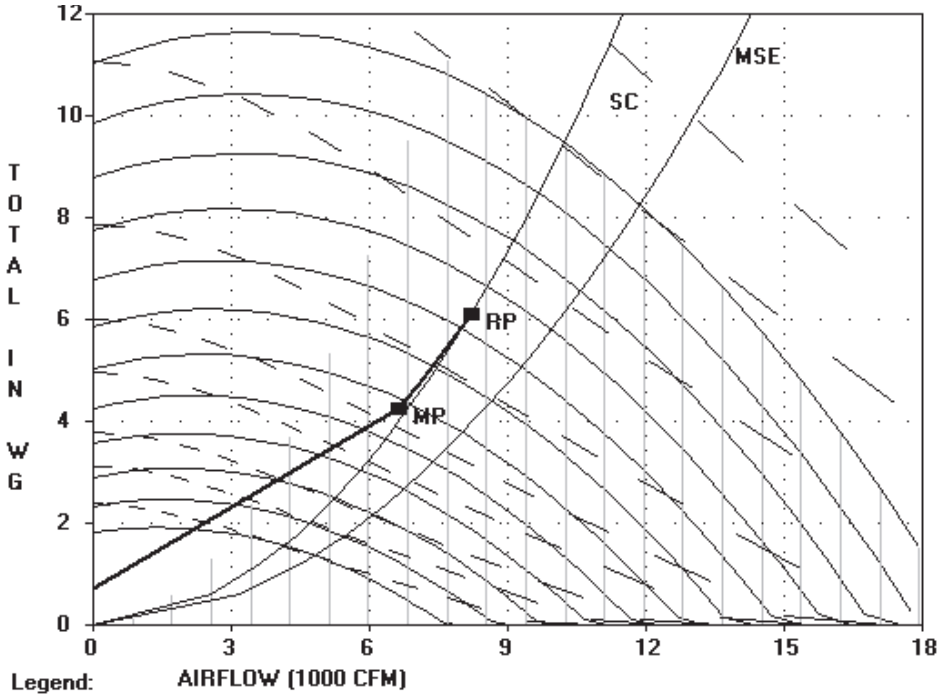

Legend:

- RPM - BHP MSE - Max. Static Eff. SC - System Curve RP - Rated Point

RPM = 2969 BHP = 11.8 CLASS III MAX. RPM = 3700

RPM's (x 100, L to R): 15. 17. 19. 21. 23. 25. 27. 29. 31. 33. 35. 37.

BHP's (L to R): 1.5 2.3 3 4.5 6 9 15 22.5 30

Sensor and Actuator Points List

Project: San Bernadino County Sherriff Station AHU
Unit Tag: AH 5

Name	AI	AO	DI	DO
Return/Exhaust Fan Status			X	
Mixed Air Temperature Sensor	X			
Low Temperature Thermostat			X	
Supply Fan Status			X	
Supply Air Temperature Sensor	X			

Carrier Part Number ..... OPN-UCXP
Manufacturer ..... Carrier

I-VU® UC Open XP

Unit Controller

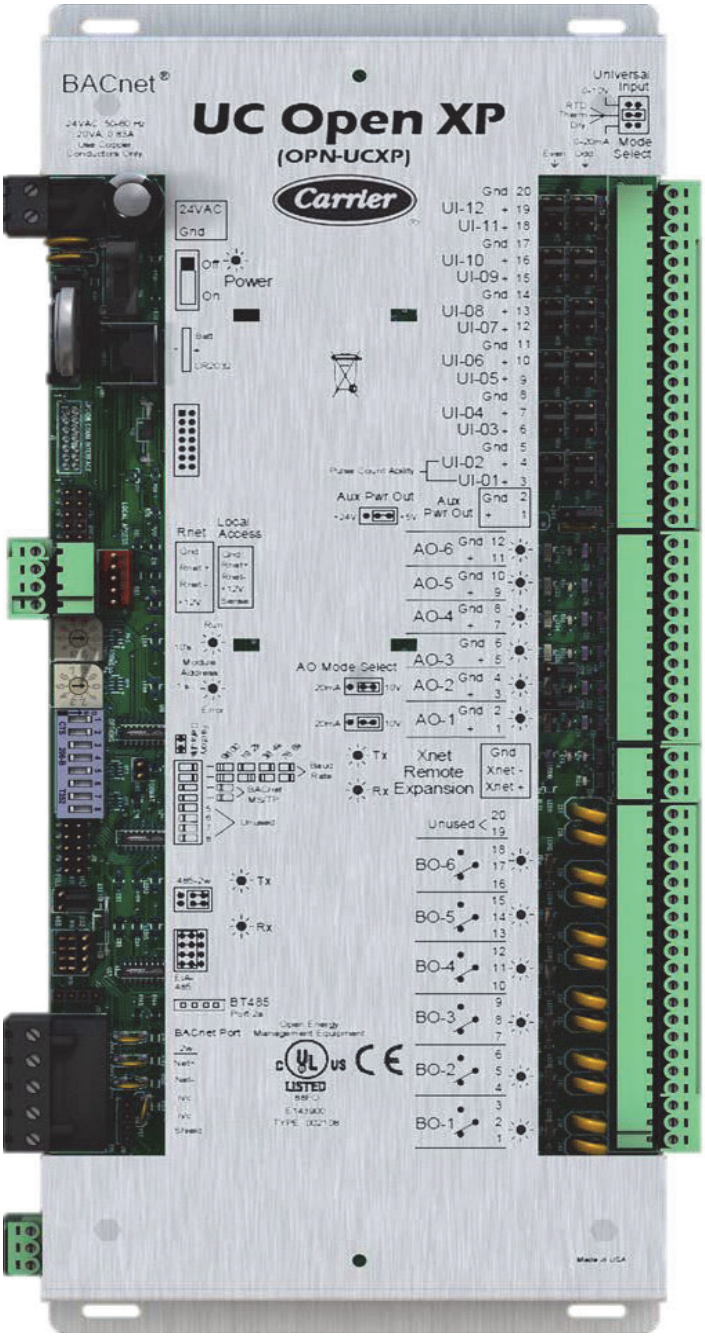

BACNet Support – Advanced application controller (B-AAC), as defined in BACNet 135-2001 Annex L
BACNet Communication Port – EIA-485 port for BACnet MS/TP communications (baud rate is DIP switch selectable)
Local Access Communication Port – For system start-up and troubleshooting (115.2 kbps)
Rnet Communication Port – For connecting Carrier communicating room sensors and Carrier's touchscreen user interface
Inputs – 12 inputs: Configurable for 0-10V, RTD/Thermistor/Dry contact, or 0-20mA. Inputs 1 and 2 may be used for pulse counting. All analog inputs have 12 bit A/D resolution.
Outputs – 6 binary outputs: Configured as dry contact, normally open or normally closed. All binary outputs must be powered from a Class 2 power source.
6 analog outputs: 1 and 2 are configurable for 0-10V or 0-20mA; 3-6 are 0-10V only. Analog outputs have 8 bit D/A resolution.
Protection – Incoming power and network connections are protected by non-replaceable internal solidstate polyswitches that reset themselves when the condition that causes a fault returns to normal. The power, network, input, and output connections are also protected against voltage transient and surge events.
Real Time Clock – Battery-backed real time clock keeps track of time in event of power failure.
Battery – 10-year Lithium CR2032 battery provides a minimum of 10,000 hours of trend data & time retention during power outages.
Status Indicators – LED status of power, running, and errors. LED indicators for transmit/receive for BACnet port and for each of the 12 outputs.
Controller Addressing – Rotary DIP switches set BACnet MS/TP MAC address of controller.
Listed By – UL-916, FCC Part 15-Subpart B- Class A, CE EN50082-1997
Operating/Storage Range – -24° to 140°F (-30° to 60°C), 10-90% relative humidity, non-condensing
Power Requirements – 24VAC +/- 10%, 50-60Hz
20VA power consumption
Single Class 2 source only, 100VA or less

Controller Expansion Board Submittal

Project: San Bernadino County Sherriff Station AHU
Unit Tag: AH 5

Carrier Part Number ..... OPN-UCXPIO
Manufacturer ..... Carrier

I-VU® UC Open XPIO

Unit Controller Expansion Board

Communication Ports – Xnet Remote Expansion port: For connecting to a UC XP Controller via the Xnet network.
Inputs – 8 binary inputs: Inputs 1-8 are binary only and support pulse counting up to 10 Hz.
8 analog inputs: Inputs 9-16 are universal inputs, jumper selectable between thermistor/dry contact and 0-5VDC. All analog inputs have 10 bit A/D resolution.
Outputs – 8 binary outputs: Configured as dry contact, normally open, and must be powered from a Class 2 power source.
Protection – Incoming power and network connections are protected by non-replaceable internal solidstate polyswitches that reset themselves when the condition that causes a fault returns to normal. The power, network, input, and output connections are also protected.
Status Indicators – LED status of power, outputs, running and errors.
Listed By – UL916 (Canadian Std. C22.2 No. 205-M 1983), CE, FCC Part15-Subpart B - Class A
Operating/Storage Range – -20°F to 140°F (-29° to 60°C), 10-90% relative humidity, non-condensing
Power Requirements – 24VAC +/- 10%, 50-60Hz
13VA power consumption
26VDC (25V min, 30V max)
Single Class 2 source only, 100VA or less

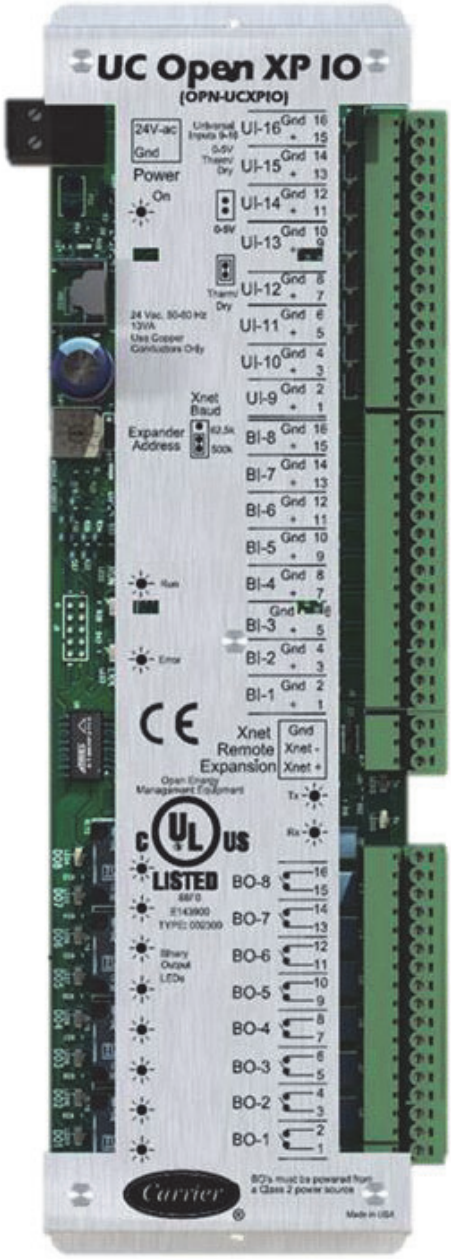

Supply Air Temperature (SAT) Sensor Submittal

Project: San Bernadino County Sherriff Station AHU
Unit Tag: AH 5

Carrier Part Number	33ZCSENSAT
Manufacturer	Automation Components, Inc.
Manufacturer Part Number	ACI/10K-CP-D4
Cable	1
Channel	UI-2
Terminal/Signal	TB2-10 / 10K Thermistor AI
Terminal/Signal	TB2-12 / Signal Ground

SAT

Supply Air Temperature Sensor

The SAT sensor consists of a thermistor encased within a stainless steel probe.

The thermistor has a temperature range of -245º to 185º F with a nominal resistance of 10,000 ohms at 77º F.

Wire Terminations

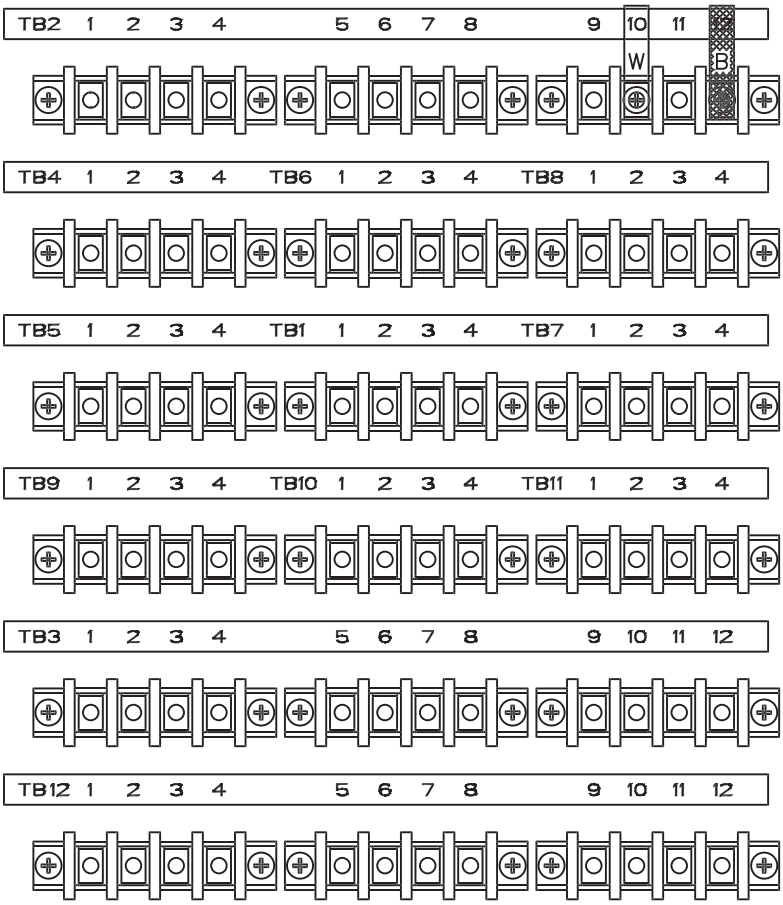

Mixed Air Temperature (MAT) Sensor Submittal

Project: San Bernadino County Sherriff Station AHU
Unit Tag: AH 5

Carrier Part Number HH79NZ041
Manufacturer ..... Automation Components, Inc.
Manufacturer Part Number ACI/10K-CP-A24
Cable 4
Channel UI-3
Terminal/Signal ..... TB2-7 / 10K Thermistor AI
Terminal/Signal ..... TB2-8 / Signal Ground

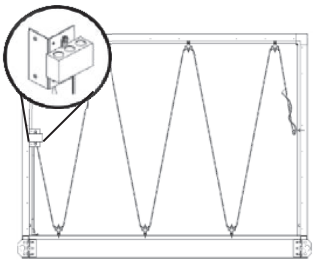

MAT

Mixed Air Temperature Sensor

The MAT sensor consists of multiple, evenly spaced thermistors encased within a flexible copper tube.

Mechanical and electrical averaging is used to achieve the temperature measurement over the entire element length.

The MAT sensor has a range of -40º to 185º F with a nominal resistance of 10,000 ohms at 77º F.

The sensor is located in the last mixing box in the airflow.

Wire Terminations

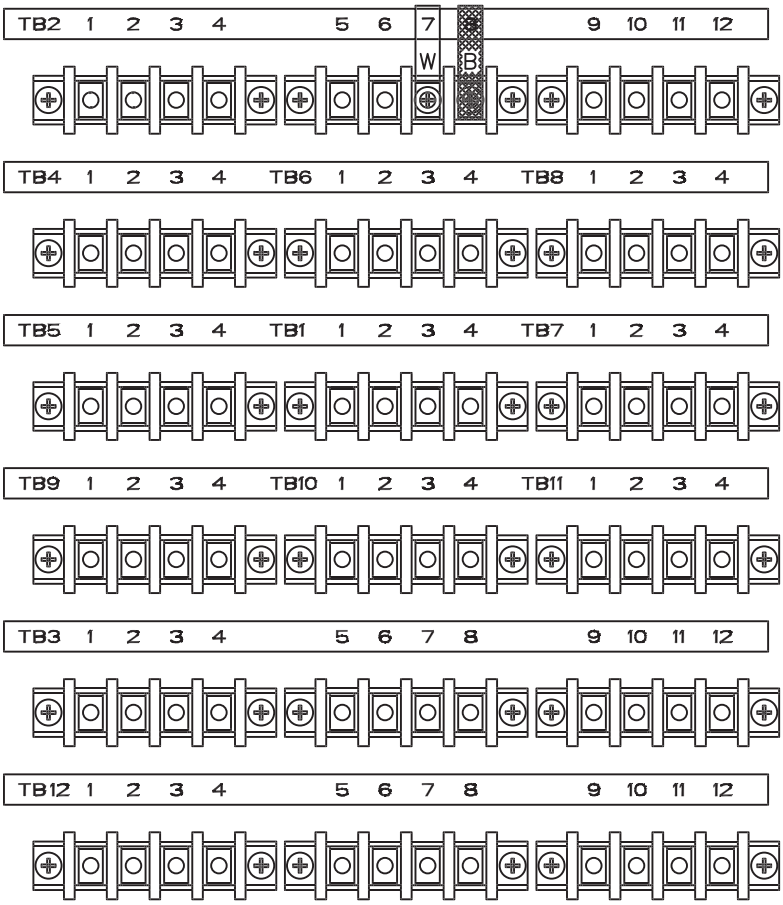

Low Temperature Thermostat Submittal

Project: San Bernadino County Sherriff Station AHU
Unit Tag: AH 5

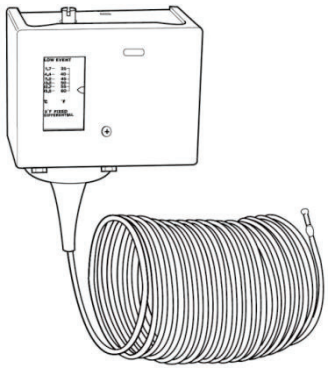

Carrier Part Number HH22BZ001
Manufacturer ..... Schneider Electric
Manufacturer Part Number TC-5231-702
Cable 2
Channel UI-5
Terminal/Signal ..... TB2-4 / Dry Contact DI
Terminal/Signal ..... TB2-3 / Signal Ground

LTT

Low Temperature Thermostat

20 ft. element senses temperature over a large area. Control responds to the coldest one-foot section of the sensor.

Adjustable setpoint from 35º F to 60º F with 5º F fixed differential.

Rated for use at 17 full load amps (120/208/240 Vac), 24 non-inductive amps (120/208/240 Vac), and 16 non-inductive amps (24 Vac).

Enclosure rating: NEMA Type 1.

Approvals: UL & CSA.
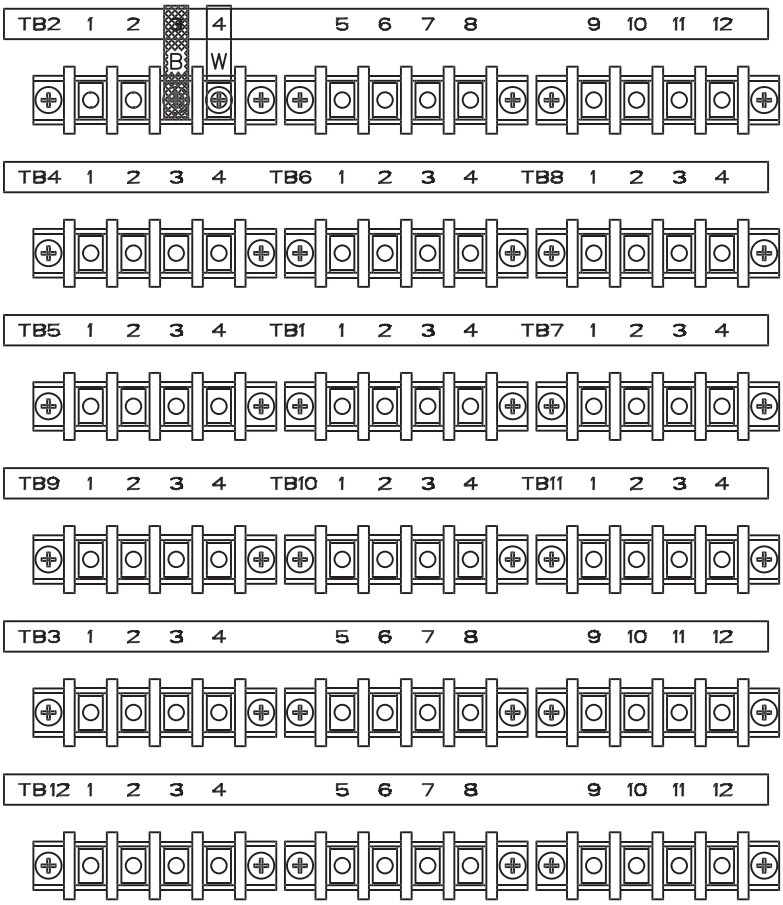
Wire Terminations