WARNING: ALL INDIVIDUALS INTERESTED IN BIDDING ON THIS PROJECT MUST OBTAIN THE FINAL PLANS AND SPECIFICATIONS FROM THE DEPARTMENT MANAGING THE PROJECT OR AS OTHERWISE STATED IN THE ADVERTISEMENT FOR BIDS FOR THE PROJECT. DO NOT USE THE PLANS AND SPECIFICATIONS POSTED ON THE CLERK OF THE BOARD'S WEBSITE FOR BIDDING ON THIS PROJECT.

NOT FOR BID

SAN BERNARDINO COUNTY
FIRE STATION #226
PROJECT # 10.10.1032

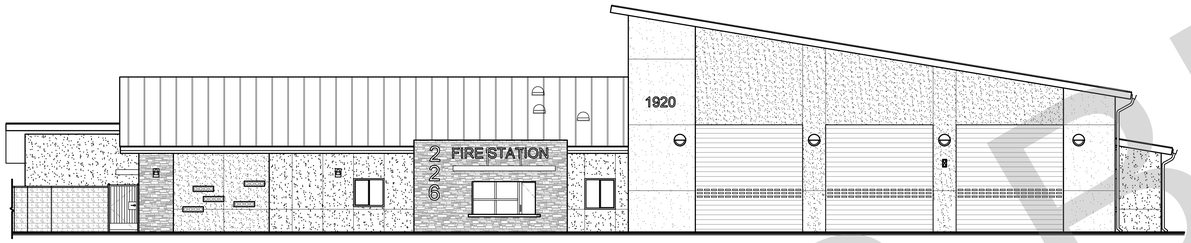

1920 DEL ROSA AVE. N.,
SAN BERNARDINO, CA. 92404

NOT FOR BID

ABBREVIATIONS / SYMBOLS LEGEND

AC	= AIR COMPRESSOR	MAX.	= MAXIMUM
CG	= CORNER GUARDS	MIN.	= MINIMUM
C.J.	= CONTROL JOINTS	NIC	= NOT IN CONTRACT
CONC.	= CONCRETE	O.C.	= ON CENTER (SPACING)
CONT	= CONTRACTOR	SS	= STAINLESS STEEL
DIA.	= DIAMETER	SW. BD.	= SWITCH BOARD
E.J.	= EXPANSION JOINT	TEL	= TELEPHONE BACKBOARD.
EM	= EMERGENCY	TV	= TELEVISION
EXH	= EXHAUST SYSTEM, SEE MECH.	TYP.	= TYPICAL CONDITION, UON
FD	= FLOOR DRAIN	UON	= UNLESS OTHERWISE NOTED
FE	= FIRE EXTINGUISHER		
FS	= FLOOR SINK		
GYP. BD.	= GYPSUM BOARD		
HM	= HOLLOW METAL		

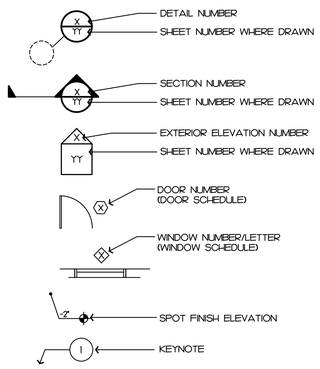

TITLE 24 MANDATORY MEASURES

INSTALLED INSULATING MATERIAL SHALL HAVE BEEN CERTIFIED BY THE MANUFACTURER TO COMPLY WITH THE CALIFORNIA QUALITY STANDARDS FOR INSULATING MATERIAL.

ALL INSULATING MATERIALS SHALL BE INSTALLED IN COMPLIANCE WITH THE FLAME SPREAD RATING AND SMOKE DENSITY REQUIREMENTS OF SECTION 2602 AND 707 OF THE CBC.

ALL EXTERIOR JOINTS AND OPENINGS IN THE BUILDING ENVELOPE THAT ARE OBSERVABLE SOURCES OF AIR LEAKAGE SHALL BE CAULKED, GASKETED, OR WEATHERSTRIPPED.

SITE CONSTRUCTED DOORS, WINDOWS AND SKYLIGHTS SHALL BE CAULKED BETWEEN THE UNIT AND THE BUILDING, AND SHALL BE WEATHER STRIPPED (EXCEPT FOR UNFRAMED GLASS DOORS AND FIRE DOORS)

MANUFACTURED DOORS AND WINDOWS INSTALLED SHALL HAVE AIR INFILTRATION RATES CERTIFIED BY THE MANUFACTURER PER 2-5369(a). AFTER JULY 1, 1993, MANUFACTURED FENESTRATION PRODUCTS MUST BE LABELED FOR U-VALUE ACCORDING TO NFRC PROCEDURES. ALSO ALL OVERHEAD DOORS OF APPARATUS ROOM, PROVIDE CERTIFICATES OF COMPLIANCE FOR DOORS, WINDOWS & INSULATION.

SCOPE OF WORK/PROJECT DESCRIPTION

THE COUNTY OF SAN BERNARDINO WISHES TO CONSTRUCT A NEW FIRE STATION ON 1920 DEL ROSA AVE. N, SAN BERNARDINO, CA. 92404. THE NEW FIRE STATION IS 8,952 S.F. WHICH INCLUDES TWO APPARATUS BAYS W/ LOCKER ROOM, 8 SLEEPING QUARTERS, 4 BATHROOMS, 1 OFFICE, KITCHEN, DAYROOM, LAUNDRY, FITNESS, ETC. THE EXTERIOR INCLUDES A 20X20 STORAGE BUILDING, DIESEL FUEL TANK, EMERGENCY GENERATOR, HOSE DRYING RAMP, CMU SITE WALLS, ETC.

GEOTECHNICAL INSPECTION CHECKLIST

A PRE-CONSTRUCTION CONFERENCE WITH THE GEOTECHNICAL ENGINEER SHALL BE HELD AT THE SITE PRIOR TO THE INITIATION OF SITE GRADING TO ASSURE A COMPLETE UNDERSTANDING OF THE RECOMMENDATIONS PRESENTED IN THIS REPORT AS THEY APPLY TO THE ACTUAL GRADING PERFORMED.

THE FOLLOWING SHALL BE INSPECTED BY THE GEOTECHNICAL ENGINEER:

BUILDING PAD - WHEN OVER EXCAVATION WORK HAS REACHED BOTTOM.

BUILDING PAD - WHEN OVER EXCAVATION MATERIAL IS BEING PLACED. TESTS SHOULD BE TAKEN @ 2'-0" VERTICAL INTERVALS.

MATERIAL IMPORT - WHEN PLACEMENT OF IMPORT MATERIAL. TESTS SHOULD BE TAKEN @ 2'-0" VERTICAL INTERVALS.

CONCRETE - PRIOR TO ANY BUILDING OR SITE CONCRETE PLACEMENT. (NON-RETAINING CMU WALLS DO NOT REQUIRE TESTING)

CONCRETE - PRIOR TO THE PLACEMENT OF BASE, STEEL, & CONCRETE. THE CONCRETE SUB-GRADE SHOULD BE TESTED. THIS INCLUDES ALL CONCRETE SLABWORK.

SITE UTILITY TRENCHES - ALL SITE UTILITY TRENCHES MUST BE TESTED FOR PROPER COMPACTION.

SITE LIGHTING ELECTRICAL TRENCHES - ALL TRENCHES MUST BE TESTED FOR PROPER COMPACTION.

LANDSCAPE SLEEVES - ALL TRENCHES FOR LANDSCAPE SLEEVES MUST BE TESTED FOR PROPER COMPACTION.

NOTE: THE GENERAL CONTRACTOR SHOULD BECOME FAMILIAR W/ THE SOILS REPORT PROVIDED AS PART OF THE SPECIFICATIONS.

NOTES TO GENERAL CONTRACTOR

THE GENERAL BUILDING CONTRACTOR SHALL SUBMIT TO THE COUNTY OF SAN BERNARDINO PROJECT MANAGEMENT DIVISION THE FOLLOWING DOCUMENTS FOR REVIEW AND APPROVAL PRIOR TO OBTAINING BUILDING PERMIT:

1. FIRE SPRINKLER SYSTEM SHALL BE DESIGNED, ENGINEERED AND BUILT BY GENERAL CONTRACTOR & FIRE SPRINKLER SUB-CONTRACTOR. GENERAL CONTRACTOR TO DESIGN THE SYSTEM TO MEET NFPA 13D IN THE LIVING AREA AND NFPA 13 LIGHT HAZARD IN THE APPARATUS BAYS. SPRINKLER PLANS SHALL BE SUBMITTED AND APPROVED BY THE FIRE PREVENTION BUREAU UNDER A SEPARATE PERMIT (CBC 106.3.3). CONTRACTOR SHALL PROVIDE A COMPLETE AND FUNCTIONING SYSTEM, INCLUDING ANY REQUIRED ELECT. WORKS, TRENCHING, ETC., TO THE OWNER AT NO ADDED COST.
2. COMPLY W/ C.B.C. SECTION 3303.7 - "PEDESTRIAN PROTECTION" DURING CONSTRUCTION.
3. GENERAL CONTRACTOR TO PROVIDE ALL BACKING/FRAMING AS NECESSARY FOR LIGHTS, GRAB BARS, PLASTER REVEALS, SIGNS, ETC. WITH NO ADDED COST TO THE OWNER.
4. DEFERRED SUBMITTAL / SEPARATE PERMITS

   THE FOLLOWING ARE UNDER DEFERRED SUBMITTAL/SEPARATE PERMITS (TO BE OBTAINED BY THE GENERAL CONTRACTOR):
   - SITE WALLS
   - FLAGPOLE
   - LIGHT POLE
   - SIGNS
   - FIRE SPRINKLER SYSTEM
   - TRUSSES
   - GENERATOR (AQMD APPROVAL REQUIRED)
   - ABOVE GROUND FUEL TANK (FIRE DEPT. & SAN BERNARDINO COUNTY ENVIRONMENTAL HEALTH APPROVAL REQUIRED).
   - UNDERGROUND FIRE LINE FROM STREET MAIN TO BUILDING
   - FIRE ALARM

   SUBMITTAL DOCUMENTS (PLANS & CALCULATIONS) FOR DEFERRED ITEMS SHALL BE SUBMITTED TO THE ARCHITECT OR ENGINEER OF RECORD, WHO SHALL REVIEW THEM AND FORWARD THEM TO THE BUILDING OFFICIAL WITH A NOTATION INDICATING THAT THE DEFERRED DOCUMENTS HAVE BEEN REVIEWED AND THAT THEY HAVE BEEN FOUND TO BE IN GENERAL CONFORMANCE WITH THE DESIGN OF THE BUILDING. THE DEFERRED ITEMS SHALL NOT BE INSTALLED UNTIL THEIR DESIGN AND SUBMITTAL DOCUMENTS HAVE BEEN APPROVED BY THE BUILDING OFFICIAL.
5. CLEANOUTS INSTALLED UNDER CONCRETE OR ASPHALT PAVING SHALL BE ACCESSIBLE BY YARD BOXES, OR EXTENDED FLUSH WITH PAVING WITH A "BRASS CAP" OR OTHER APPROVED MATERIAL WHEN SUBJECT TO VEHICULAR TRAFFIC. (TMCC 15.0.04(F))
6. ELECTRICAL CONDUITS IN COMMERCIAL BUILDINGS TO BE BURIED 6" BELOW CONCRETE SLAB. (TMCC 15.04.050C.3)
7. VERTICAL GLAZING SHALL HAVE U-FACTORS PER NFRC 100-5B OR DEFAULT VALUES PER APPENDIX I OR ACM MANUAL. (CEC EXCEPTION TO 116(A) 2)
8. REQUIRED SPECIAL INSPECTIONS

   THE FOLLOWING SPECIAL INSPECTIONS PER 2019 C.B.C. ARE REQUIRED:
   -- SOILS COMPLIANCE PRIOR TO FOUNDATION INSPECTIONS.
   -- STRUCTURAL CONCRETE OVER 2,500 P.S.I.
   -- FIELD WELDING.
   -- HIGH-STRENGTH BOLTS.
   -- EXPANSION EPOXY ANCHORS.
   -- PROVIDE STRUCTURAL SPECIAL INSPECTIONS. SEE SHEET S0.1.
9. STRUCTURAL OBSERVATION BY THE ENGINEER/ARCHITECT SHALL BE PERFORMED. A STATEMENT IN WRITING SHALL BE GIVEN TO THE BUILDING OFFICIAL, STATING THAT THE SITE VISIT HAVE BEEN MADE AND WHETHER OR NOT ANY OBSERVED DEFICIENCIES HAVE BEEN CORRECTED TO CONFORM TO THE APPROVED PLANS AND SPECIFICATIONS. SECTION 1701.
10. WHEN SERVING MORE THAN 100 SPRINKLER HEADS, AUTOMATIC SPRINKLER SYSTEMS SHALL BE SUPERVISED BY AN APPROVED CENTRAL, PROPRIETARY OR REMOTE STATION SERVICE, OR SHALL BE PROVIDED WITH A LOCAL ALARM WHICH WILL GIVE AN AUDIBLE SIGNAL AT A CONSTANTLY ATTENDED LOCATION. SECTION 904.3. GENERAL CONTRACTOR SHALL PROVIDE FIRE ALARM AS REQUIRED BY THE FIRE DEPARTMENT. CONTRACTOR SHALL PROVIDE A COMPLETE AND FUNCTIONING SYSTEM, INCLUDING ANY REQUIRED ELECT. WORKS, TRENCHING, ETC., TO THE OWNER AT NO ADDED COST.
11. NO HAZARDOUS MATERIALS ARE TO BE STORED OR USED WITHIN THE BUILDING WHICH EXCEED THE QUANTITIES IN U.B.C. TABLES 3-D & 3-E.
12. PROVIDE CABLE/WIRE/CONDUIT FOR CATV SYSTEM PER ELECT'L.
13. PAINT CONC. CURB "RED" & PROVIDE "BLUE" REFLECTOR IN THE STREET PER THE COUNTY OF SAN BERNARDINO FIRE DEPARTMENT REQUIREMENTS AT NO ADDED COST.
14. THE UNDERGROUND FIRE LINE IS NOT TO BE CONSTRUCTED UNTIL THE ABOVEGROUND FIRE SPRINKLER SYSTEM PLANS HAVE BEEN APPROVED BY THE COUNTY OF SAN BERNARDINO FIRE DEPARTMENT AND DISTRIBUTED TO ALL PARTIES (ARCHITECT AND OWNER).
15. GENERAL CONTRACTOR TO COORDINATE / PROVIDE A "COPPER-WIRE" PHONE LINE FROM TELEPHONE COMPANY TO TELEPHONE BACK BOARD.
16. PROVIDE A CONSTRUCTION WASTE MANAGEMENT PLAN AND DOCUMENTATION WHICH COMPLIES WITH CGBC 5.408.2. REDUCE CONSTRUCTION WASTE BY RECYCLING OR SALVAGING FOR RE-USE A MINIMUM OF 50% OF CONSTRUCTION AND DEMOLITION DEBRIS, OR MEET LOCAL CONSTRUCTION AND DEMOLITION WASTE MANAGEMENT ORDINANCE, WHICHEVER IS MORE STRINGENT. CGBC 5.408.3
17. PROJECT PHASING:

    THE EXISTING FIRE STATION BUILDING SHALL REMAIN FULLY FUNCTIONAL AND OCCUPIED DURING THE DURATION OF THE CONSTRUCTION OF THE NEW FIRE STATION. THE GENERAL CONTRACTOR SHALL PROVIDE ANY TEMPORARY UTILITIES AND OR ACCESS PATHWAYS/DRIVEWAYS THAT MAY BE REQUIRED FOR EITHER OR BOTH BUILDINGS TO REMAIN OPERATIONAL. THIS SHALL BE INCLUDED IN THE CONTRACTORS BID AND SHALL NOT INCUR ADDITIONAL COST TO THE OWNER.

    PHASE I:
    - DEMOLISH AND SITE PREP ALL THAT IS REQUIRED WEST OF THE EXISTING FIRE STATION.
    - CONSTRUCT ALL IMPROVEMENTS POSSIBLE TO THE WEST OF AND AROUND THE EXISTING FIRE STATION STRUCTURE WHILE KEEPING THE EXISTING FIRE STATION OPERATIONAL.
    - ONCE THE NEW FIRE STATION IS COMPLETE AND TEMPORARY OCCUPANCY IS GRANTED BY THE BUILDING OFFICIAL THE OCCUPANTS OF THE EXISTING FIRE STATION MAY MOVE INTO THE NEW FIRE STATION.

    PHASE II:
    - DEMOLISH THE EXISTING / OLD FIRE STATION AND ALL THE OLD IMPROVEMENTS EAST OF THE NEW FIRE STATION.
    - CONSTRUCT THE BALANCE OF IMPROVEMENTS REQUIRED EAST OF THE NEW FIRE STATION.

    GENERAL CONTRACTOR SHALL SUBMIT WRITTEN PLANS AND SCHEDULE THAT ADDRESSES ALL OF THE ABOVE IN MORE DETAIL PRIOR TO BEGINNING AND ON SITE CONSTRUCTION WORK.

DESIGN TEAM

OWNER
SAN BERNARDINO COUNTY
PROJECT & FACILITIES MANAGEMENT DEPARTMENT
BEVILLE LLOYD, PROJECT MANAGER
385 N. ARROWHEAD AVE.
SAN BERNARDINO, CA 92415
PHONE: (909) 387-5000

ARCHITECT
STK ARCHITECTURE, INC.
TONY FINALDI, ARCHITECT
42095 ZEVO DRIVE, STE. A-15
TEMECULA, CA 92590
951-296-9110 / Tfinaldi@stkinc.com

STRUCTURAL ENGINEER
INNOVATIVE STRUCTURAL ENGINEERING
SHAWN LOTHROP, P.E., S.E. / CEO
27369 VIA INDUSTRIA
TEMECULA, CA 92590
951-600-0032 / Shawn@iseengineers.com

MPE ENGINEER
SALAS O'BRIEN
ED DAVID, P.E.
3220 EXECUTIVE RIDGE, STE. 210
VISTA, CA 92081
(760) 560-0100 / ed.david@salasobrien.com

CIVIL ENGINEER
ERSC REDLANDS LOCATION
MATT BRUDIN, P.E. / PRINCIPAL
1861 W REDLANDS BLVD.
REDLANDS, CA 92373
909-890-1255 / Matt@erscinc.com

LANDSCAPE ARCHITECT
ALHAMBRA GROUP
VINCE DI DONATO
41635 ENTERPRISE CIRCLE N., STE. C
TEMECULA, CA 92590
951-296-6802 / Vince@alhambragroup.net

VICINITY MAP

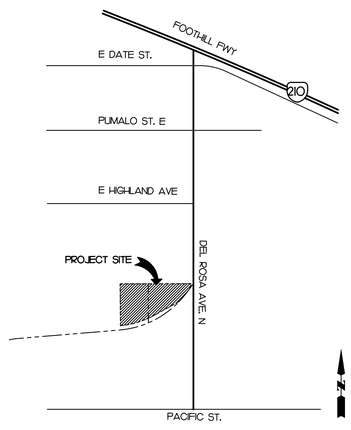

N.T.S.

ASSESSOR'S PARCEL NUMBER:	0273 - 011 - 22

FIRE STATION

OCCUPANCY GROUP	= B, R2
TYPE OF CONSTRUCTION	= V-B
SPRINKLERED (YES/NO)	= YES
STORIES	= 1
HEIGHT (ALLOWABLE 40'-0")	= 20'-3"
BASIC ALLOWABLE FLOOR AREA	= 28,000 S.F.
ACTUAL WORK/SLEEP FLOOR AREA	**= 4,803 S.F. < 28,000 S.F. (OK)**

APPARATUS BAY

OCCUPANCY GROUP	= S2
TYPE OF CONSTRUCTION	= V-B
SPRINKLERED (YES/NO)	= YES
STORIES	= 1
HEIGHT (ALLOWABLE 60'-0")	= 26'-8"
BASIC ALLOWABLE FLOOR AREA	= 54,000 S.F.
ACTUAL APPARATUS BAY FLOOR AREA	**= 5,064 S.F. < 54,000 F.S. (OK)**

TOTAL FLOOR AREA R-2 PLUS S-2 (FIRE STATION & APPARATUS)	**=9,867 S.F.**

STORAGE BUILDING

OCCUPANCY GROUP	= S1
TYPE OF CONSTRUCTION	= V-B
SPRINKLERED (YES/NO)	= NO
STORIES	= 1
HEIGHT	= 14'-0"
BASIC ALLOWABLE FLOOR AREA	= 9,000 S.F.
ACTUAL STORAGE BLDG. FLOOR AREA	**= 400 S.F. < 9,000 S.F. (OK)**

APPLICABLE CODES

ALL WORK SHALL COMPLY WITH CURRENTLY ADOPTED:

2019 CALIFORNIA BUILDING CODE (CBC), PART 2, TITLE 24 C.C.R. (2018 INTERNATIONAL BUILDING CODE)

2019 CALIFORNIA ELECTRICAL CODE (CEC), PART 3, TITLE 24 C.C.R. (2018 NATIONAL ELECTRICAL CODE)

2019 CALIFORNIA MECHANICAL CODE (CMC) PART 4, TITLE 24 C.C.R. (2018 UNIFORM MECHANICAL CODE)

2019 CALIFORNIA PLUMBING CODE (CPC), PART 5, TITLE 24 C.C.R. (2018 UNIFORM PLUMBING CODE)

2019 CALIFORNIA GREEN BUILDING STANDARDS CODE

2019 CALIFORNIA ENERGY CODE

AMERICANS WITH DISABILITIES ACT 1990 WITH 2010 ADA STANDARDS FOR ACCESSIBLE DESIGN AND 2010 REVISIONS TO TITLE II

LEGAL DESCRIPTION/CODE ANALYSIS

SHEET INDEX

T1.1 - TITLE SHEET
T1.2 - CAL GREEN

CIVIL
C1.1 - TITLE SHEET
C2.1 - PRECISE GRADING
C3.1 - UTILITY PLAN
C4.1 - EROSION CONTROL
C5.1 - WQMP PLAN
C6.1 - PRE-HYDROLOGY MAP
C7.1 - POST-HYDROLOGY MAP

LANDSCAPING
L-1 - PLANTING PLAN
L-2 - IRRIGATION PLAN
L-2 - PLANTING & IRRIGATION DETAILS

ARCHITECTURAL
A1.0 - DEMOLITION PLAN
A1.1 - SITE PLAN
A1.2 - SITE DETAILS
A1.3 - SITE DETAILS
A1.4 - SITE DETAILS
A1.5 - CAR PARK CANOPY DETAILS
A1.5.1 - CANOPY SECTIONS/ ELEVATIONS
A2.0 - DIMENSION FLOOR PLAN
A2.1 - REFERENCE FLOOR PLAN
A2.2 - CLERESTORY FLOOR PLAN
A2.3 - SCHEDULES
A2.4 - DOOR & WINDOW DETAILS
A2.5 - REFLECTED CEILING PLAN & DETAILS
A2.6 - ROOF PLAN & DETAILS
A2.7 - FINISH FLOOR PLAN
A3.1 - BUILDING SECTIONS & DETAILS
A3.2 - EXTERIOR ELEVATIONS
A4.2 - INTERIOR ELEVATIONS
A5.1 - INTERIOR ELEVATIONS
A5.2 - INTERIOR ELEVATIONS
A6.1 - MISCELLANEOUS DETAILS
A6.2 - MISCELLANEOUS DETAILS

STRUCTURAL
SC5 - STRUCTURAL COVER SHEET
SN1 - STRUCTURAL NOTES
SN2 - STRUCTURAL NOTES
S1 - FOUNDATION PLAN
S2 - LOW ROOF FRAMING PLAN
S3 - HIGH/ CLERESTORY ROOF FRAMING PLAN
S4 - SITE STRUCTURES, STORAGE BUILDING & TRASH ENCLOSURE- ROOF FRAMING & FOUNDATION PLANS.
S5 - SITE STRUCTURES, FUEL GENERATOR/ TANK CANOPY - ROOF FRAMING & FOUNDATION PLANS
SD1 - FOUNDATION DETAILS
SD1.1 - SITE & RETAINING WALL DETAILS
SD2 - GENERAL WOOD FRAMING DETAILS
SD3 - ROOF FRAMING DETAILS
SD3.1 - AWNING FRAMING DETAILS
SD4 - SITE STRUCTURES -ADDITIONAL DETAILS

MECHANICAL
M0.1 - MECHANICAL LEGEND AND GENERAL NOTES
M0.2 - MECHANICAL SCHEDULES
M0.3 - TITLE 24
M0.4 - TITLE 24
M2.1 - MECHANICAL FLOOR PLAN
M5.1 - MECHANICAL DETAILS
M5.2 - MECHANICAL DETAILS

PLUMBING
P0.1 - PLUMBING LEGEND AND GENERAL NOTES
P0.2 - PLUMBING SCHEDULES & CALCULATIONS
P0.3 - PLUMBING SCHEDULES
P1.1 - PLUMBING SITE PLAN
P2.1 - PLUMBING FLOOR PLAN SEWER & VENT
P2.2 - PLUMBING FLOOR PLAN DOMESTIC WATER
P2.3 - PLUMBING FLOOR PLAN
P4.1 - PLUMBING RISER DIAGRAM
P4.2 - PLUMBING RISER DIAGRAM
P5.1 - PLUMBING DETAILS
P5.2 - PLUMBING DETAILS

ELECTRICAL
E0.1 - ELECTRICAL LEGEND AND GENERAL NOTES
E0.2 - ELECTRICAL SCHEDULES
E0.3 - EXTERIOR TITLE 24
E0.4 - INTERIOR TITLE 24
E1.1 - ELECTRICAL SITE PLAN
E2.1 - LIGHTING FLOOR PLAN
E2.1EM - LIGHTING PHOTOMETRIC EMERGENCY
E2.1PH - LIGHTING PHOTOMETRIC
E2.2 - POWER FLOOR PLAN
E2.3 - ELECTRICAL FLOOR PLAN
E4.1 - SINGLE LINE DIAGRAM AND LOAD SUMMARY
E4.2 - PANEL SCHEDULES
E5.1 - ELECTRICAL DETAILS

COMMUNICATION
DATA2.1 - DATA PLAN
DATA2.2 - FIRE ALERT SYSTEM

STK
42095 ZEVO DR., TEMECULA, CALIFORNIA 92590-3780
Phone: 951.296.9110 Fax: 951.296.6079 Email: stk@stkinc.com

CONSULTANT:

PROJECT ADMINISTERED BY:
SAN BERNARDINO COUNTY
PROJECT & FACILITIES
MANAGEMENT DEPARTMENT

385 N. ARROWHEAD AVE.
SAN BERNARDINO, CA 92415

PROJECT NAME:
SAN BERNARDINO
COUNTY FIRE
DEPARTMENT:
FIRE STATION 226

PROJECT # 10.10.1032

CIP #21-037

CAFM # SAB198

APN # 0273-011-22

1920 DEL ROSA AVE N.
SAN BERNARDINO,
CA 92404

ISSUE INFORMATION:

DATE:	INFORMATION:
04-11-2022	20% CD SET
04-28-2022	50% CD SET
06-15-2022	95% CD SET
09-16-2022	95% CD- 3rd BAY
10-03-2022	PLAN CHECK

SHEET INFORMATION:
STK PROJECT NO.: 374-154-21
SCALE: AS NOTED
DATE: JANUARY 2021
PLOT DATE: –
DRAWING NAME:

SEAL:
LICENSED ARCHITECT
ANTONIO FINALDI
No. C31476
REN. 07-31-23
STATE OF CALIFORNIA

SHEET TITLE:
TITLE SHEET

SHEET NO.:
T1.1

CA GREEN BUILDING CODE REQUIREMENTS

1. STORM WATER POLLUTION PREVENTION: Newly constructed projects and additions which disturb less than one acre of land shall prevent the pollution of storm water runoff from the construction activities through Local ordinances - SWPPP. The SWPPP shall be designed conforming to the State Storm Water NPDES Construction Permit and be specific to the site. CGBC Section 5.106.1

2. BICYCLE PARKING: Shall comply with the requirements of CGBC 5.106.4.1 and 5.106.4.2. Provide for short term and long term bicycle parking.

3.1 DESIGNATED PARKING for CLEAN AIR VEHICLES: Provide designated parking for low-emitting, fuel-efficient and carpool/van pool vehicles per CGBC Table 5.106.5.2, and mark CLEAN AIR VEHICLE. CGBC 5.106.5.2

3.2 ELECTRIC VEHICLE CHARGING: Provide charging space requiements, amount of spaces and identification per CGBC 5.106.5.3.1-4

4. LIGHT POLLUTION REDUCTION: Design interior and exterior lighting such that zero direct-beam illumination leaves the building site. CGBC 5.106.8

5. GRADING and PAVING: The site shall be planned and developed to keep surface water from entering building. CGBC 5.106.10

6. ENERGY EFFICIENCY: California Energy Code [DSA-SS]. For the purposes of mandatory energy efficiency standards in this code, the California Energy Commission will continue to adopt mandatory building standards. CGBC 5.201.1

7. WATER CONSERVING FIXTURES: Plumbing fixtures and fittings shall meet the Standards Referenced in table 5.303.3.
Reduce potable water use by at least 20 percent. CGBC 5.303.2

8. OUTDOOR WATER USE: The provisions of Section 5.304, Outdoor Water Use reference the mandatory Model Water Efficiency Landscape Ordinance (MWELO) contained within Chapter 2.7, Division 2, Title 23, California Code of Regulations.

9. OUTDOOR WATER USE: REHABILITATED LANDSCAPE PROJECTS EQUAL TO OR GREATER THAN 2,500 SQUARE FEET. Rehabilitated landscape project with an aggregate landscape area equal to or greater than 2.500 square feet requiring a building or landscape permit, plan check, or design review shall comply with CGBC 5.304.2, Item 1 or 2.

10. OUTDOOR WATER USE: Areas equal to or greater than 500 SF. When water is used for outdoor irrigation for new construction projects with an aggregate landscape area equal to or greater than 500 square feet requiring a building or landscape permit, plan check or design review, one of the following shall apply: A local water efficient landscape ordinance that is, based on evidence in the record, at least as effective in conserving water as the updated model ordinance adopted by the Department of Water Resouces (DWR) per Government Code Section 65595(c).The California Department of Water Resources Model Water Efficient Landscape Ordinance (MWELO) commencing with Section 490 of Chapter 2.7, Division 2, Title 23, California Code of Regulations.CGBC 5.304.2

11. OUTDOOR WATER USE IN LANDSCAPE AREAS 2,500 SF and Less: Any project with an aggregate area of 2,500 square feet of less may comply with the performance requirements of MWELO or conform to the prescriptive compliance measures contained in MWELO's Appendix D. CGBC 5.304.4

12. Automatic irrigation controllers that are weather- or soil moisture-based shall be installed at the time of final inspection. CGBC 5.304.3.1

13. SPRINKLERS: Sprinklers shall be designed to prevent spray on structures CGBC 5.407.2.1

14. ENTRIES AND OPENINGS: Exterior entries and openings shall be designed to prevent water intrusion into buildings. CGBC 5.407.2.2.1 Install flashing integrated with a drainage plane. CGBC 5.407.2.2.2

15. CONSTRUCTION WASTE REDUCTION: Reduce construction waste by recycling or salvaging for re-use a minimum of 65 percent of the nonhazardous construction and demolition debris, or meet the local construction and demolition waste management ordinance, whichever is more stringent. CGBC 5.408.3

16. CONSTRUCTION WASTE REDUCTION: A construction waste management plan shall be provided prior to start of construction. CGBC 5.408.1.1

17. CONSTRUCTION WASTE REDUCTION: Provide a construction waste management plan and documentation which complies with CGBC 5.408.1.1

18. EXCAVATED SOIL and LAND CLEARING DEBRIS: 100% of trees, stumps, rocks, and associated vegetation and soils resulting primarily from land clearing shall be reused or recycled. CGBC 5.408.4

19. RECYCLING BY OCCUPANTS: Readily accessible areas for recycling paper, corrugated cardboard, glass, plastics and metals shall be provided to serve the entire building CGBC 5.410.1

20. Provide commisioning requirements as listed. Include owner's project requirement, basis of design, commissioning plan, and all other requirements per CGBC 5.410.2.1-2

21. POLLUTANT CONTROL: All duct openings and other air distribution component openings shall be protected during storage on the construction site until final start-up with tape, plastic, sheet metal, or other acceptable methods to reduce the amount of dust and debris which may collect in the system. CGBC 5.504.3

22. FINISH MATERIAL POLLUTANT CONTROL: Adhesives, adhesive bonding primers, adhesive primers, sealants, sealant primers, and caulks shall comply with local or regional air pollution control or air quality management district rules where applicable, or SCAQMD Rule 1168 VOC limits and prohibition on the use of certain toxic chemicals, except per subsection 2. CGBC 5.504.4.1, subsection 1

23. ADHESIVES, SEALANTS AND CAULKS: Aerosol adhesives, smaller unit sizes of adhesives, and sealant or caulking compounds (in units of product, less packing, which do not weigh more than 1 pound and do not consist of more than 16 fluid ounces) shall comply with statewide VOC standards and other requirements, including prohibitions on the use of certain toxic compounds, of CCR, Title 17, commencing with Section 94507. CGBC 5.504.4.1, subsection 2

24. PAINTS AND COATINGS: VOC Content Limits for Architectural Coatings (Architectural Paints) shall comply with CGBC Table 5.504.4.3, unless more stringent local limits apply. CGBC 5.504.4.3

25. PAINTS AND COATINGS: Aerosol paints and coatings shall meet the requirements of Sections 94522(a)(3), 94522(c)(2), and (d)(2) of California Code of Regulations, Title 17 commencing with Section 94520. CGBC 5.504.4.3.1)

26. CARPET SYSTEMS: Carpets shall meet one of the following: 1. Carpet and Rug Institute's Green Label Plus Program, 2. California Department of Public Health Standard Practice for the testing of VOCs (Specification 01350), 3. NSF/ANSI 140 at the Gold Level. 4. Scientific Certifications Systems Indoor AdvantageTM Gold. CGBC 5.504.4.4

27. CARPET SYSTEMS: Carpet cushion shall meet the requirements of the Carpet and Rug Institute Green Label Program, carpet adhesive shall meet the requirements of Table 5.504.4.1
CGBC 5.504.4.4.1, 5.504.4.4.2

28. COMPOSITE WOOD PRODUCTS: Hardwood plywood, particleboard, and medium density fiberboard composite wood products shall meet the requirements for Formaldehyde Limits in Table 5.504.4.5. and as specified AN ARBs Air Toxics Control Measure for Composite Wood. GBC 5.504.4.5

29. RESILIENT FLOORING SYSTEMS: At least 80 percent of the floor area shall comply with VOC emission limits defined in the 2009 Collaborative for High Performance Schools (CHPS) Low-emitting Materials List or certified under the Resilient Floor Covering Institute (RFCI) FloorScore program. CGBC 5.504.4.7

30. DOCUMENTATION/VERIFICATION of COMPLIANCE: Pollutant control documentation shall be provided to indicate compliance with Section 5.504 and shall include at least one of the following: Product certifications and specifications, chain of custody certifications, or other methods acceptable to the enforcing agency. CGBC 5.504.4.5.2

31. FILTERS: Provide filters with a Minimum Efficiency Reporting Value (MERV) of at least 8 for outside and return air in regularly occupied areas of mechanically ventilated buildings. CGBC 5.504.5.3

32. ENVIRONMENTAL TOBACCO SMOKE: Where outdoor areas are provided for smoking, prohibit smoking within 25 feet of building entries, outdoor air intakes, and operable windows and in buildings. Meet additional and more stringent requirements in applicable ordinances, regulations, and policies. CGBC 5.504.7

33. INDOOR MOISTURE CONTROL: buildings shall comply with CBC Section 1203 (Ventilation) and Chapter 14 (Exterior Walls). CGBC 5.505 Also refer to the requirements of CGBC 5.407 that reference CBC Section 1403.2 (Weather Protection), CEC section 150 (Mandatory Features and Devices), and text indicating the proper design of sprinklers and building openings shall help assure water remains outside the building. CGBC 5.505.1 31. For indoor air quality, meet the requirements of the CEC for outside air delivery and carbon dioxide monitoring. CGBC 5.506

34. HVAC, refrigeration, and fire-suppression equipment shall not contain CFCs or Halon. CGBC 5.508

35. Provide an operation and maintenance manual with content per 5.410.4.5 (when new construction is over 10,000SF) and in a format acceptable to the Enforcing Agency - shall be placed in the building at the time of Final Inspection. CGBC 5.410.4.5

36. ENVIRONMENTAL COMFORT: Roof and wall assemblies exposed to noise sources shall have an STC rating of at least 50, with exterior windows having a minimum of 40 in the following locations, per CBGC 5.507.4 (or as directed by the Building Official):

a) Within the 65 CNEL Noise Contour of a freeway, railroad or industrial source, as determined by the jurisdiction"s Noise Element of the General Plan.
b) Within the 65 CNEL contour of an airport.

37. OUTDOOR AIR QUALITY: Ozone Depletion and Greenhouse Gas Reductions. installations of HVAC, Refrigeration and Fire Suppression Equipment shall comply with SECTIONS 5.508.1.1 AND 5.508.1.2.

38. 5.508.1.1 CHLOROFLUOROCARBONS (CFCS). INSTALL HVAC, REFRIGERATION AND FIRE SUPPRESSION EQUIPMENT THAT DO NOT CONTAIN CFCS.

39. 5.508.1.2 HALONS. INSTALL HVAC, REFRIGERATION AND FIRE SUPPRESSION EQUIPMENT THAT DO NOT CONTAIN HALONS.

NOT FOR BID

09/30/2022 4:56PM J:\374-SANPMD\374-154-21 SBC Fire Station No. 226\Architectural\0T1.2- CAL GREEN.dwg

STK ARCHITECTURE, INC.
42095 ZEVO DR., TEMECULA, CALIFORNIA 92590-3780
Phone: 951.296.9110 Fax: 951.296.6079 Email: stk@stkinc.com

CONSULTANT:

PROJECT ADMINISTERED BY:
SAN BERNARDINO COUNTY
PROJECT & FACILITIES
MANAGEMENT DEPARTMENT

385 N. ARROWHEAD AVE.
SAN BERNARDINO, CA 92415

PROJECT NAME:
SAN BERNARDINO
COUNTY FIRE
DEPARTMENT:
FIRE STATION 226

PROJECT # 10.10.1032
CIP #21-037
CAFM # SAB198
APN # 0273-011-22

1920 DEL ROSA AVE N.
SAN BERNARDINO,
CA 92404

ISSUE INFORMATION:

DATE:	INFORMATION:
04-11-2022	20% CD SET
04-28-2022	50% CD SET
06-15-2022	95% CD SET
09-16-2022	95% CD- 3rd BAY
10-03-2022	PLAN CHECK

SHEET INFORMATION:

STK PROJECT NO.:	374-154-21
SCALE:	AS NOTED
DATE:	JANUARY 2021
PLOT DATE:	–
DRAWING NAME:	

SEAL:

SHEET TITLE:
CAL GREEN

SHEET NO.:
T1.2

SAN BERNARDINO COUNTY

FIRE STATION NO.226

GRADING NOTES:

1. ALL GRADING SHALL CONFORM TO THE LATEST CALIFORNIA BUILDING CODE (CBC) CHAPTERS 17, 18, APPENDIX-J AND ALL APPLICABLE SECTIONS.
2. A GRADING PERMIT SHALL BE OBTAINED PRIOR TO COMMENCEMENT OF ANY WORK ON THE SITE.
3. ISSUANCE OF A GRADING PERMIT DOES NOT ELIMINATE THE NEED FOR PERMITS FROM OTHER REGULATORY AGENCIES WITH REGULATORY RESPONSIBILITIES FOR CONSTRUCTION ACTIVITIES ASSOCIATED WITH THE WORK AUTHORIZED IN THIS PLAN.
4. ALL WORK UNDER THIS PERMIT SHALL BE LIMITED TO WORK WITHIN THE PROPERTY LINES. A SEPARATE CONSTRUCTION, EXCAVATION OR ENCROACHMENT PERMIT FROM THE DEPARTMENT OF PUBLIC WORKS MAY BE REQUIRED FOR ANY WORK WITHIN THE COUNTY RIGHT-OF-WAY.
5. APPROVAL OF THESE PLANS DOES NOT AUTHORIZE ANY WORK OR GRADING TO BE PERFORMED UNTIL THE EFFECTIVE PROPERTY OWNER'S PERMISSION HAS BEEN OBTAINED AND VALID GRADING PERMIT HAS BEEN ISSUED.
6. THIS PLAN IS FOR GRADING PURPOSES ONLY AND IS NOT TO BE USED FOR THE PURPOSE OF CONSTRUCTING ONSITE OR OFFSITE IMPROVEMENTS. ISSUANCE OF A PERMIT BASED ON THIS PLAN DOES NOT CONSTITUTE APPROVAL OF DRIVEWAY LOCATIONS OR SIZES, PARKING LOT STRUCTURAL SECTIONS OR LAYOUT, ADA-RELATED REQUIREMENTS, BUILDING LOCATIONS OR FOUNDATIONS, WALLS, CURBING, OFFSITE DRAINAGE FACILITIES OR OTHER ITEMS NOT RELATED DIRECTLY TO THE BASIC GRADING OPERATION. ONSITE IMPROVEMENTS SHALL BE CONSTRUCTED IN ACCORDANCE TO THE APPROVED BUILDING PERMIT PLANS. OFFSITE IMPROVEMENTS SHALL BE CONSTRUCTED IN ACCORDANCE TO PLANS APPROVED FOR THIS PURPOSE BY THE PUBLIC WORKS DEPARTMENT.
7. MAXIMUM CUT AND FILL SLOPE = 2:1 (HORIZONTAL TO VERTICAL) AND MAXIMUM VERTICAL HEIGHT = 30 FEET, UNLESS AN APPROVED GEOTECHNICAL REPORT CAN JUSTIFY A STEEPER AND TALLER SLOPE.
8. NO FILL SHALL BE PLACED ON EXISTING GROUND UNTIL THE GROUND HAS BEEN CLEARED OF WEEDS, DEBRIS, TOPSOIL AND OTHER DELETERIOUS MATERIAL.
9. FILL SLOPES SHALL NOT HAVE LESS THAN 90% RELATIVE COMPACTION, OR AS RECOMMENDED ON THE APPROVED GEOTECHNICAL REPORT.
10. IT IS THE GRADING CONTRACTOR'S RESPONSIBILITY TO ENSURE THAT ADEQUATE COMPACTION HAS BEEN ATTAINED ON THE ENTIRE GRADING SITE, INCLUDING FILL AREAS OUTSIDE THE BUILDING PADS AND ON ALL FILL SLOPES.
11. UNLESS OTHERWISE RECOMMENDED IN AN APPROVED GEOTECHNICAL REPORT, OVER-EXCAVATION SHALL BE AT LEAST 24 INCHES MINIMUM BELOW THE BOTTOM OF FOOTINGS OR TO COMPETENT NATIVE SOIL OR BEDROCK MATERIALS, WHICHEVER IS DEEPER, AS APPROVED BY THE PROJECT'S GEOTECHNICAL ENGINEER OR GEOLOGIST.
12. EARTHWORK VOLUMES:
    CUT 887 (CY), FILL 2,863 (CY), TOTAL DISTURBED AREA 70,049 (SF)
13. EARTHWORK QUANTITIES ARE SHOWN FOR GRADING PERMIT PURPOSES ONLY, AND SAN BERNARDINO COUNTY IS NOT RESPONSIBLE FOR THEIR ACCURACY.
14. A COPY OF THE GRADING PERMIT AND APPROVED GRADING PLANS MUST BE IN THE POSSESSION OF A RESPONSIBLE PERSON AND AVAILABLE AT THE SITE AT ALL TIMES.
15. ANY ONSITE RETAINING WALLS SHOWN ON THE GRADING PLANS THAT ARE OVER 4' IN HEIGHT, MEASURED FROM TOP OF WALL TO BOTTOM OF FOOTING, ARE FOR REFERENCE ONLY. RETAINING WALLS OVER 4' IN HEIGHT ARE NOT CHECKED, PERMITTED, OR INSPECTED PER THE GRADING PERMIT. A SEPARATE RETAINING WALL PERMIT IS REQUIRED FOR ALL RETAINING WALLS OVER 4' IN HEIGHT.
16. ANY WALLS, FENCES, STRUCTURES AND/OR APPURTENANCES ADJACENT TO THIS PROJECT ARE TO BE PROTECTED IN PLACE. IF GRADING OPERATIONS DAMAGE OR ADVERSELY AFFECT SAID ITEMS IN ANY WAY, THE CONTRACTOR AND/OR DEVELOPER IS RESPONSIBLE FOR WORKING OUT AN ACCEPTABLE SOLUTION TO THE SATISFACTION OF THE AFFECTED PROPERTY OWNER(S).
17. FOR SITES WITH PROTECTED SPECIES OR TREES, THE PROPOSED GRADING MAY BE SUBJECT TO A SEPARATE PERMIT.
18. ADEQUATE FIRE ACCESS AROUND BUILDINGS (INCLUDING GARAGES) SHOULD BE PROVIDED AS APPROVED BY COUNTY FIRE.
19. EXISTING DRAINAGE COURSES SHALL NOT BE OBSTRUCTED, ALTERED, OR DIVERTED WITHOUT PRIOR APPROVAL FROM THE COUNTY OF SAN BERNARDINO, LAND DEVELOPMENT DIVISION. A STREAMBED ALTERATION AGREEMENT MAY ALSO BE REQUIRED FROM THE CALIFORNIA DEPARTMENT OF FISH AND WILDLIFE.
20. DRAINAGE EASEMENTS SHALL NOT BE OBSTRUCTED, ALTERED OR DIVERTED WITHOUT PRIOR APPROVAL OF THE COUNTY OF SAN BERNARDINO, LAND DEVELOPMENT DIVISION.
21. SETBACKS AND BUILDING LOCATIONS SHOWN ON THIS PLAN ARE FOR REFERENCE ONLY AND MUST BE REVIEWED AND APPROVED UNDER A SEPARATE BUILDING PERMIT.
22. UTILITY AND SEPTIC IMPROVEMENTS SHOWN ON THIS PLAN ARE FOR REFERENCE ONLY AND MUST BE REVIEWED AND APPROVED UNDER A SEPARATE BUILDING PERMIT.
23. ON PROJECTS DISTURBING ONE ACRES OR MORE, THE FOLLOWING NOTE MUST BE ADDED: A NOTICE OF INTENT (NOI) HAS BEEN, OR WILL BE FILED WITH THE STATE WATER RESOURCES CONTROL BOARD (SWRCB) AND A STORM WATER POLLUTION PREVENTION PLAN (SWPPP) HAS BEEN OR WILL BE PREPARED IN ACCORDANCE WITH THE REQUIREMENTS OF CALIFORNIA GENERAL PERMIT FOR STORM WATER DISCHARGES ASSOCIATED WITH CONSTRUCTION ACTIVITY (PERMIT NO. CAS000002) FOR ALL OPERATIONS ASSOCIATED WITH THESE PLANS. THE PERMITTEE SHALL KEEP A COPY OF THE SWPPP ON SITE AND AVAILABLE FOR REVIEW BY COUNTY.
24. IN CONJUNCTION WITH THE CALIFORNIA GENERAL PERMIT FOR PROPOSED DISTURBANCE OVER ONE ACRE, AN ACTIVE WASTEWATER DISCHARGE ID # (WDID) MUST BE INCLUDED ON THE FINAL GRADING PLAN.
25. FOR ENGINEERED GRADING, A FINAL GRADING CERTIFICATION WILL BE COLLECTED BY THE BUILDING INSPECTOR AT THE FINAL BUILDING INSPECTION OR PRIOR A GRADING FINAL STATUS ON THE PERMIT. THE FINAL GRADING CERTIFICATION IS TO BE COMPLETED BY THE ENGINEER OF RECORD ON THE APPROVED GRADING PLANS.
26. ALL FLOOD ZONE REQUIREMENTS MUST BE REFLECTED OR ACCOUNTED FOR ON THE GRADING PLANS. ELEVATIONS OR CONSTRUCTION NOTES MUST BE INCLUDED IN THE PLANS TO ENSURE COMPLIANCE WITH ALL APPLICABLE FIRST FLOOR ELEVATION REQUIREMENTS PER FEMA AND SAN BERNARDINO COUNTY DEVELOPMENT CODE GUIDELINES.
27. FOR NONRESIDENTIAL PROJECTS, PROVIDE FOLLOWING NOTE ON PLANS:
    CALIFORNIA GREEN BUILDING STANDARDS CODE
    5.408.3 EXCAVATED SOIL AND LAND CLEARING DEBRIS.
    100 PERCENT OF TREES, STUMPS, ROCKS AND ASSOCIATED VEGETATION AND SOILS RESULTING PRIMARILY FROM LAND CLEARING SHALL BE REUSED OR RECYCLED. FOR A PHASED PROJECT, SUCH MATERIAL MAY BE STOCKPILED ON SITE UNTIL THE STORAGE SITE IS DEVELOPED.
    EXCEPTION: REUSE, EITHER ON-OR OFF-SITE, OF VEGETATION OR SOIL CONTAMINATED BY DISEASE OR PEST INFESTATION.

EROSION CONTROL NOTES:

1. IN CASE OF EMERGENCY, CALL (RESPONSIBLE PERSON) AT (24-HOUR TELEPHONE).
2. POLLUTION AND EROSION PREVENTION MEASURES, ALSO KNOWN AS BEST MANAGEMENT PRACTICES (BMPS), MUST BE INSTALLED PRIOR TO GRADING. THESE MEASURES, INCLUDING THE PREVENTION OF SEDIMENTATION OR FLOOD DAMAGE, TO OFFSITE PROPERTY SHALL BE ADEQUATE WHETHER OR NOT AN EROSION CONTROL PERMIT IS REQUIRED.
3. ERODED SEDIMENTS AND OTHER POLLUTANTS MUST BE RETAINED ONSITE AND MAY NOT BE TRANSPORTED FROM THE SITE VIA SHEET FLOW, SWALES, AREA DRAINS, NATURAL DRAINAGE COURSES, OR WIND.
4. EROSION CONTROL DEVICES SHALL BE FUNCTIONING AT ALL TIMES. IN CASE OF FAILURE, RAPID CONSTRUCTION OF EMERGENCY DEVICES SHALL BE IMPLEMENTED.
5. STOCKPILES OF EARTH AND OTHER CONSTRUCTION-RELATED MATERIALS MUST BE PROTECTED FROM BEING TRANSPORTED FROM THE SITE BY THE FORCES OF WIND OR WATER.
6. FUELS, OILS, SOLVENTS, AND OTHER TOXIC MATERIALS MUST BE STORED IN ACCORDANCE WITH THEIR LISTING AND ARE NOT TO CONTAMINATE THE SOILS AND SURFACE WATERS. ALL APPROVED STORAGE CONTAINERS ARE TO BE PROTECTED FROM THE WEATHER. SPILLS MUST BE CLEANED UP IMMEDIATELY AND DISPOSED OF IN A PROPER MANNER. SPILLS MAY NOT BE WASHED INTO THE DRAINAGE SYSTEM.
7. EXCESS OR WASTE CONCRETE MUST BE CONTAINED ONSITE. PROVISIONS SHALL BE MADE TO RETAIN CONCRETE WASTES ONSITE UNTIL THEY CAN BE DISPOSED OF AS SOLID WASTE.
8. DEVELOPERS/CONTRACTORS ARE RESPONSIBLE TO ENSURE ALL EROSION CONTROL DEVICES AND BMPS ARE INSTALLED AND FUNCTIONING PROPERLY PER PLAN. PROPER PRECAUTION SHALL BE CONSIDERED WHEN 50% OR GREATER PROBABILITY OF PREDICTED PRECIPITATION, AND AFTER ACTUAL PRECIPITATION. A CONSTRUCTION SITE INSPECTION CHECKLIST AND INSPECTION LOG SHALL BE MAINTAINED AT THE PROJECT SITE AT ALL TIMES AND AVAILABLE FOR REVIEW BY THE BUILDING OFFICIAL.
9. TRASH AND CONSTRUCTION-RELATED SOLID WASTES MUST BE DEPOSITED INTO A COVERED RECEPTACLE TO PREVENT CONTAMINATION OF RAINWATER AND DISPERSAL BY WIND.
10. SEDIMENTS AND OTHER MATERIALS MAY NOT BE TRACKED FROM THE SITE BY VEHICLE TRAFFIC. THE CONSTRUCTION ENTRANCE ROADWAYS MUST BE STABILIZED SO AS TO INHIBIT SEDIMENTS FROM BEING DEPOSITED INTO THE PUBLIC WAY. ACCIDENTAL DEPOSITIONS MUST BE SWEPT UP IMMEDIATELY AND MAY NOT BE WASHED DOWN BY RAIN OR OTHER MEANS.
11. ANY SLOPES WITH DISTURBED SOILS OR DENUDED OF VEGETATION MUST BE STABILIZED SO AS TO INHIBIT EROSION BY WIND AND WATER.
12. ALL SILT AND DEBRIS SHALL BE REMOVED FROM ALL DEVICES WITHIN 24 HOURS AFTER EACH RAINSTORM AND BE DISPOSED OF PROPERLY.
13. ALL STORM WATER CAPTURE DEVICES SHALL BE PROTECTED AT ALL TIMES.

CIVIL ENGINEER'S STATEMENT:

"I CERTIFY THAT I WILL BE RESPONSIBLE FOR THIS GRADING IN ACCORDANCE WITH SECTION 7014(C) OF THE BUILDING CODE TO INCLUDE INCORPORATING ALL RECOMMENDATIONS OF THE SOILS ENGINEER, REPORT AND BE RESPONSIBLE FOR PROFESSIONAL INSPECTION AND APPROVAL OF THE GRADING. THIS SHALL INCLUDE, BUT NOT BE LIMITED TO, INSPECTION AND APPROVAL AS TO THE ESTABLISHMENT OF LINE GRADE AND DRAINAGE OF DEVELOPMENT AREA. I WILL ALSO BE RESPONSIBLE FOR THE PREPARATION OF REVISED PLANS AND THE SUBMISSION OF 'AS GRADED' GRADING PLANS UPON THE COMPLETION OF THE WORK.

SUPERVISING CIVIL ENGINEER R.C.E. NUMBER DATE

SOILS ENGINEER'S STATEMENT:

"I SHALL PROVIDE PROFESSIONAL INSPECTION AND APPROVAL CONCERNING THE PREPARATION OF GROUND TO RECEIVE FILLS, TESTING FOR REQUIRED COMPACTION STABILITY OF ALL FINISHED SLOPES AND INCORPORATING THE DATE SUPPLIED BY THE ENGINEERING GEOLOGIST AND THE PREPARATION OF THE SOILS GRADING REPORT."

SUPERVISING CIVIL ENGINEER R.C.E. NUMBER DATE
(TO BE SIGNED PRIOR TO ISSUANCE OF GRADING PERMIT BY SOILS ENGINEER OF RECORD)

NO GRADING IN EXCESS OF 5000 CU. YDS. SHALL BE STARTED WITHOUT FIRST NOTIFYING THE ENGINEER. A PRE-GRADING MEETING AT THE SITE IS REQUIRED BEFORE START OF GRADING WITH THE FOLLOWING PEOPLE PRESENT: OWNER, GRADING CONTRACTOR, SUPERVISING CIVIL ENGINEER, SOILS ENGINEER AND/OR GEOLOGIST, CITY CONSTRUCTION INSPECTORS OR THEIR REPRESENTATIVES.

THE PERMITTEE OR HIS AGENT SHALL NOTIFY THE CITY OF SAN BERNARDINO WHEN THE GRADING OPERATION (EXCEEDING 5000 CU. YDS.) IS READY FOR REQUIRED INSPECTIONS AS SHOWN IN THE TESTING AND INSPECTION REQUIREMENTS OF DIVISION V.

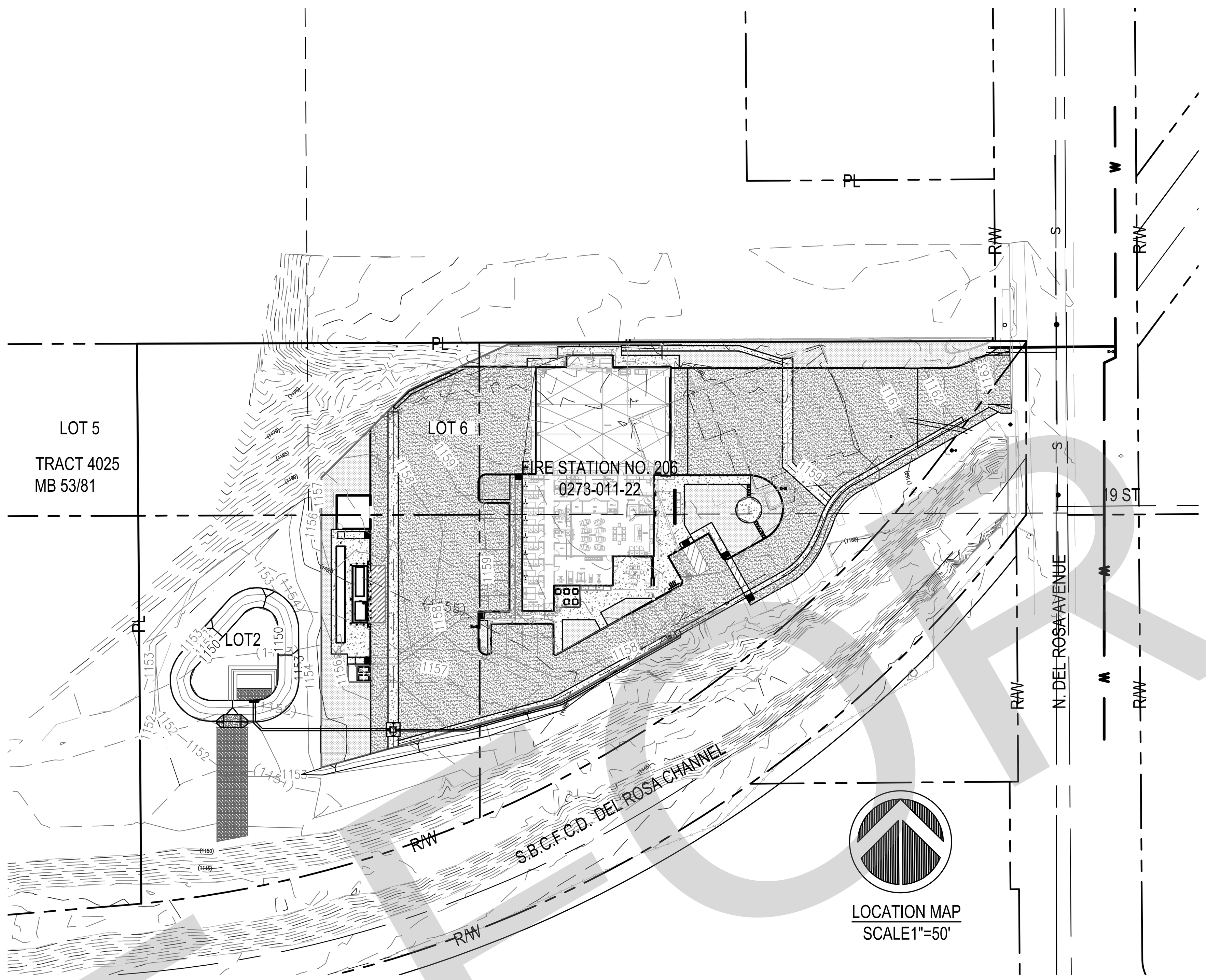

LOCATION MAP
SCALE1"=50'

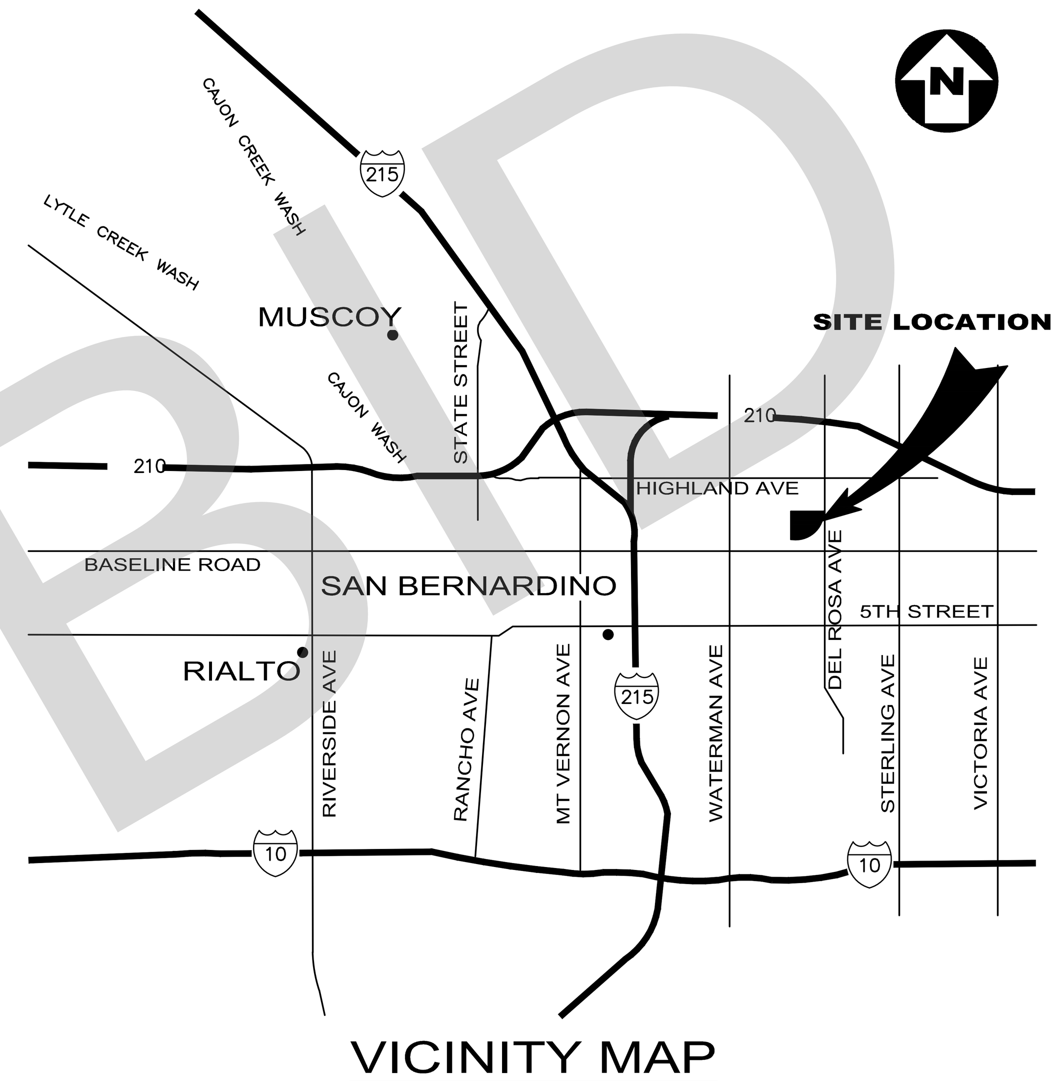

VICINITY MAP
NTS

SHEET NO.	DESCRIPTION
C1.1	TITLE SHEET
C2.1	PRECISE GRADING PLAN
C3.1	UTILITY PLAN
C4.1	EROSION CONTROL PLAN

LEGEND:

- PROPOSED RIGHT OF WAY
- PROPOSED IMPROVEMENTS
- PROPOSED FLOW LINE
- EXISTING IMPROVEMENTS
- EXISTING OVERHEAD LINE
- EXISTING GAS LINE
- EXISTING SEWER LINE
- EXISTING STORM DRAIN LINE
- EXISTING TELECOMM.
- EXISTING WATER LINE
- ℄/CENTER LINE
- CONSTRUCT RIP-RAP
- CONSTRUCT PCC IMPROVEMENTS
- POWER POLE
- STREET LIGHT
- FIRE HYDRANT
- UTILITY VALVE
- PALM TREE
- TREE
- EXISTING SIGN
- UTILITY PULL BOX
- STORM DRAIN MANHOLE
- TELEPHONE MANHOLE
- ELECTRICAL MANHOLE
- SEWER MANHOLE
- WATER MANHOLE
- WATER METER
- ELECTRICAL PULLBOX
- BENCH MARK
- SPOT ELEVATION
- FENCE

EARTHWORK QUANTITIES

CUT= 916 C.Y.
FILL= 3,467 C.Y.
TOTAL IMPORT= 2,551 C.Y.

TOPOGRAPHY SOURCE
ERSC.INC
1810 W. REDLANDS AVE., REDLANDS, CALIFORNIA 92373
(909) 890-1255

SITE ADDRESS
1920 N. DEL ROSA AVENUE, CITY OF SAN BERNARDINO, CALIFORNIA.

BENCH MARK
VERTICAL CONTROL FOR THIS SURVEY IS A NGS: BENCHMARK G-523 RESET

DESCRIPTION: "G-523 RESET" DESCRIBED BY SAN BERNARDINO COUNTY CALIFORNIA 1959 AT SAN BERNARDINO, 0.85 MILES SOUTH ALONG STERLING AVENUE FROM THE AQUINAS CATHOLIC SCHOOL FOR BOYS, AT THE INTERSECTION OF PACIFIC AVENUE, IN THE TOP OF THE NORTHWEST CORNER OF A CONCRETE CLEANOUT STRUCTURE AT THE SOUTHEAST CORNER OF THE INTERSECTION.

ELEVATION:1138.4' (NAVD88)

TOTAL DISTURBED AREA
1.60 ACRES

ASSESSOR PARCEL NUMBER
0273-011-22

GEOTECHNICAL ENGINEER'S
INLAND FOUNDATION ENGINEERING, INC.10391 1310 S. SANTA FE AVENUE, SAN JACINTO, CALIFORNIA 92581
(951) 654-1555

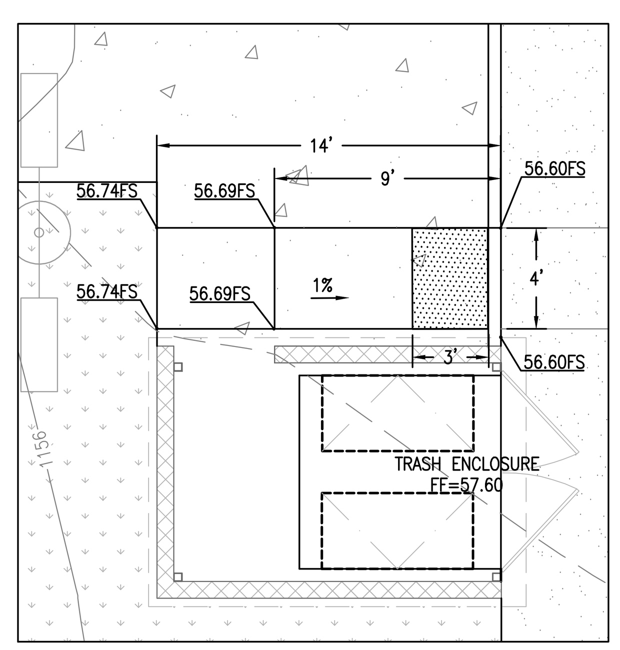

RAMP-1 DETAIL
1"=5'

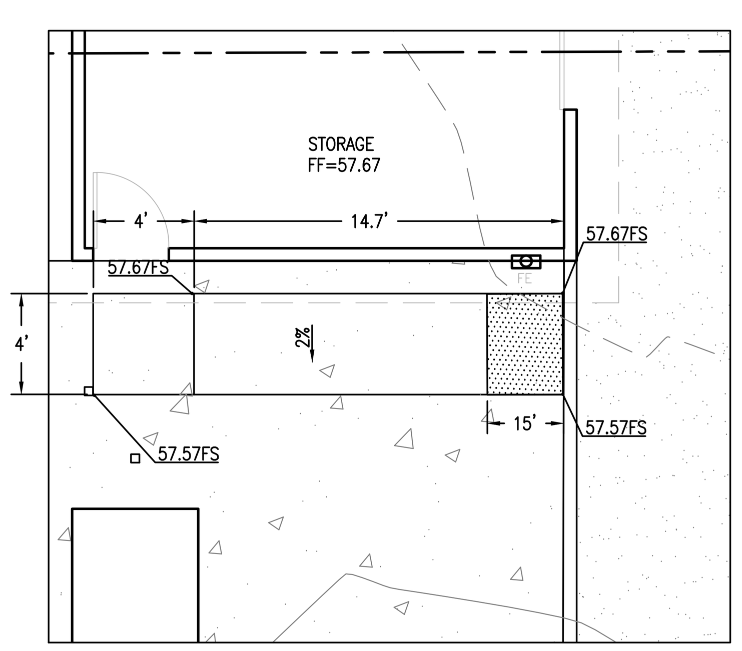

RAMP-2 DETAIL
1"=5'

STK ARCHITECTURE, INC.
42095 ZEVO DR., TEMECULA, CALIFORNIA 92590-3780
Phone: 951.296.9110 Fax: 951.296.6079 Email: stk@stkinc.com

CONSULTANT:

ERSC INC.COM
Engineering Resources of Southern California
1861 W. Redlands Blvd, Bldg 7B
Redlands, Ca. 92373
P: (909) 890-1255
F: (909) 890-0995

PROJECT ADMINISTERED BY:
SAN BERNARDINO COUNTY
PROJECT & FACILITIES
MANAGEMENT DEPARTMENT

385 N. ARROWHEAD AVE.
SAN BERNARDINO, CA 92415

PROJECT NAME:
SAN BERNARDINO COUNTY FIRE DEPARTMENT:
FIRE STATION 226

PROJECT # 10.10.1032
CIP #21-037
CAFM # SAB198
APN # 0273-011-22

1920 DEL ROSA AVE N.
SAN BERNARDINO,
CA 92404

ISSUE INFORMATION:

DATE:	INFORMATION:
04-11-2022	20% CD SET
04-28-2022	50% CD SET
06-15-2022	95% CD SET
09-16-2022	95% CD- 3rd BAY
10-03-2022	PLAN CHECK

SHEET INFORMATION:
STK PROJECT NO.: 374-154-21
SCALE: AS NOTED
DATE: JANUARY 2021
PLOT DATE: -
DRAWING NAME:

SEAL:
REGISTERED PROFESSIONAL ENGINEER JOHN M. BRUDIN No. 41836 Exp. 3/31/22 CIVIL STATE OF CALIFORNIA
1" = 20'-0"
Issue Date

SHEET TITLE:
TITLE SHEET

SHEET NO.:
C1.1

NOT FOR BID

09/29/2022 9:35AM T:\Projects\09003056 - Fire Station No. 226\DESIGN\CAD\FS226-3rd bay design\PG-FS226- thirdbay-09-16-2022_recover.dwg

GRADING CONSTRUCTION NOTES

		QUANTITIES
1	CONSTRUCT 12-INCH PCC:4500 PSI PAVEMENT OVER 6-INCH OF CLASS 2 AGGREGATE BASE COMPACTED 95% RELATIVE COMPACTION.	1,000 SQ. FT.
2	CONSTRUCT 9-INCH PCC:4500 PSI PAVEMENT OVER 6-INCH OF CLASS 2 AGGREGATE BASE COMPACTED 95% RELATIVE COMPACTION.	33,210 SQ.FT.
3	CONSTRUCT COMMERCIAL DRIVEWAY APPROACH TYPE I PLAN PER CITY OF SAN BERNARDINO STD. 204.	1 EA.
4	CONSTRUCT 36-INCH CROSS GUTTER PER CITY OF SAN BERNARDINO STD. 201.	95 LF.
5	CONSTRUCT 72-INCH CROSS GUTTER PER CITY OF SAN BERNARDINO STD. 201.	190 LF.
6	CONSTRUCT 6-INCH TYPE "A" PCC CURB PER CITY OF SAN BERNARDINO STD. 200.	550 LF.
7	CONSTRUCT 4-INCH ROLLED CURB PER CITY OF SAN BERNARDINO STD. 200.	350 LF.
8	CONSTRUCT "0" CURB FACE.	380 LF.
9	CONSTRUCT 5-INCH CONCRETE WHEEL STOP PER DETAIL.	1 EA.
10	CONSTRUCT CMU PERIMETER WALL. SEE ARCHITECTURE PLAN A2.0	1 SL.
11	CONSTRUCT RETAINING WALL PER SEPARATE PERMIT.	1 SL.
12	CONSTRUCT 4-INCH THICK CONCRETE SLAB ON-GRADE W/ #4 BARS @ 18" O.C. OVER BOTH WAYS OVER 12-COMPACTED SUBGRADE.	6330 SQ. FT.

DRAINAGE CONSTRUCTION NOTES

1	CONSTRUCT 36"X36" JENSEN CATCH BASIN MODEL 3636 CB.	2 EA.
2	CONSTRUCT HEADWALL SINGLE PIPE PER JENSEN STD. 601-4.	1 EA.
3	CONSTRUCT 10" SCH. 40 PVC PIPE.	181 LF.
4	CONSTRUCT 16" SCH. 40 PVC PIPE.	109 LF.
5	CONSTRUCT BACKING#2 PER DETAIL.	11 CY.
6	CONSTRUCT 6" THICK CONCRETE SPILLWAY PER DETAIL	1 EA.

STRIPPING CONSTRUCTION NOTES

1	CONSTRUCT 4-INCH WHITE THERMOPLASTIC PARKING STRIPE.	270 LF.
2	ADA STRIPPING SYMBOLS AND SIGN PER ARCHITECTURE PLAN, SEE SHEET A1.3.	1 SL.
3	ACCESSIBLE ROUTE HATCHED LINES PAINTED BLUE PER CBC SECTION 11B-501.	1 SL.

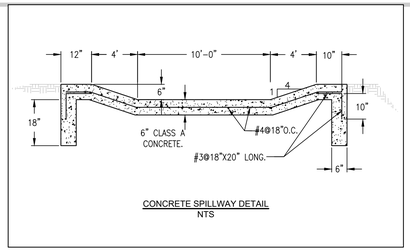

CONCRETE SPILLWAY DETAIL
NTS

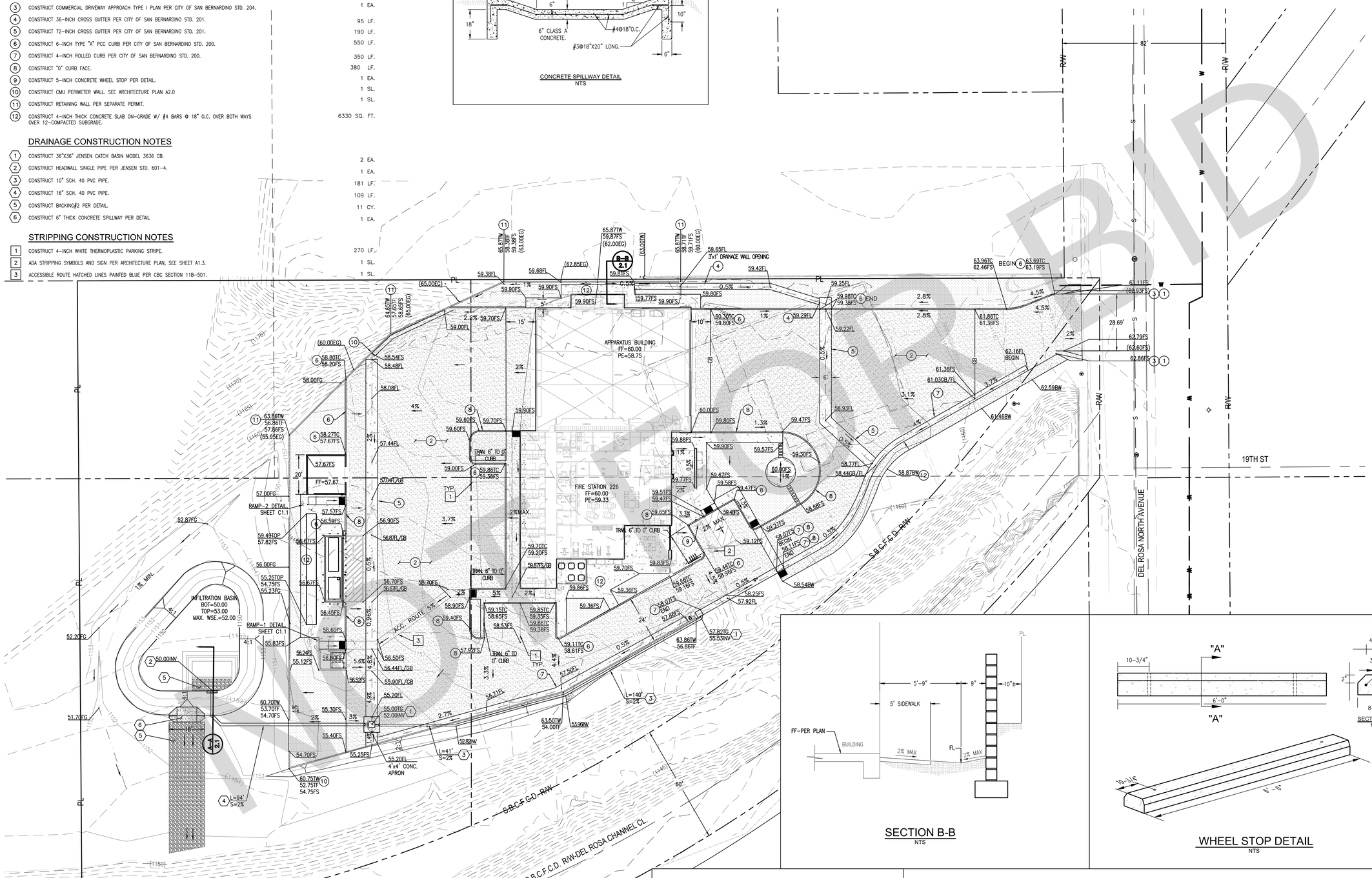

BENCHMARK:

VERTICAL CONTROL FOR THIS SURVEY IS A NGS: BENCHMARK G-523 RESET

DESCRIPTION: "G-523 RESET" DESCRIBED BY SAN BERNARDINO COUNTY CALIFORNIA 1959 AT SAN BERNARDINO, 0.85 MILES SOUTH ALONG STERLING AVENUE FROM THE AQUINAS CATHOLIC SCHOOL FOR BOYS, AT THE INTERSECTION OF PACIFIC AVENUE, IN THE TOP OF THE NORTHWEST CORNER OF A CONCRETE CLEANOUT STRUCTURE AT THE SOUTHEAST CORNER OF THE INTERSECTION.

ELEVATION:1138.4' (NAVD88)

0 10 20 Feet

SECTION B-B
NTS

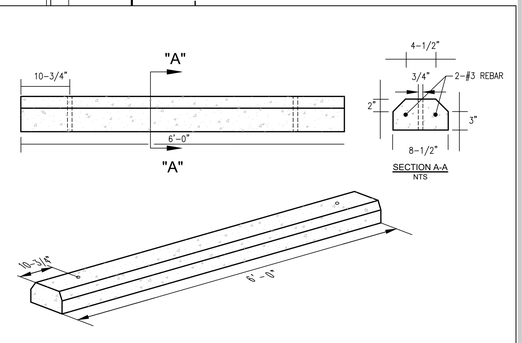

WHEEL STOP DETAIL
NTS

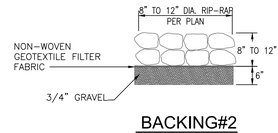

BACKING#2
NTS

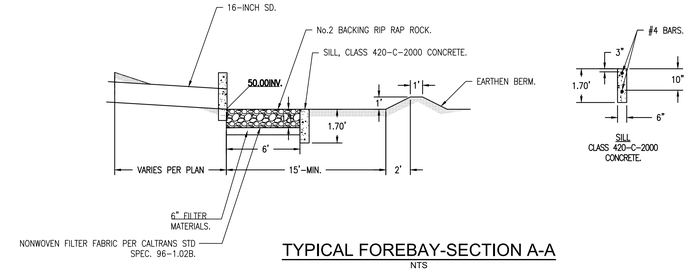

TYPICAL FOREBAY-SECTION A-A
NTS

STK ARCHITECTURE, INC.
42095 ZEVO DR., TEMECULA, CALIFORNIA 92590-3780
Phone: 951.296.9110 Fax: 951.296.6079 Email: elk@stkinc.com

CONSULTANT:

ERSC INC.COM
Engineering Resources of Southern California
1861 W. Redlands Blvd, Bldg 7B
Redlands, Ca. 92373
P: (909) 890-1255
F: (909) 890-0995

PROJECT ADMINISTERED BY:
SAN BERNARDINO COUNTY
PROJECT & FACILITIES
MANAGEMENT DEPARTMENT

385 N. ARROWHEAD AVE.
SAN BERNARDINO, CA 92415

PROJECT NAME:

SAN BERNARDINO
COUNTY FIRE
DEPARTMENT:
FIRE STATION 226

PROJECT # 10.10.1032
CIP #21-037
CAFM # SAB198
APN # 0273-011-22

1920 DEL ROSA AVE N.
SAN BERNARDINO,
CA 92404

ISSUE INFORMATION:

DATE:	INFORMATION:
04-11-2022	20% CD SET
04-28-2022	50% CD SET
06-15-2022	95% CD SET
09-16-2022	95% CD- 3rd BAY
10-03-2022	PLAN CHECK

SHEET INFORMATION:

STK PROJECT NO.: 374-154-21
SCALE: AS NOTED
DATE: JANUARY 2021
PLOT DATE: –
DRAWING NAME:

SEAL:

REGISTERED PROFESSIONAL ENGINEER JOHN M. BRUIN C 41836 Exp. 12/31/22 CIVIL STATE OF CALIFORNIA

= 20'-0"
Issue Date

SHEET TITLE:

PRECISE
GRADING

SHEET NO.:

C2.1

DOMESTIC WATER

		QUANTITIES
1	3-INCH SCH. 40 STEEL PIPE.	399 LF.
2	3-INCH DUCTILE IRON PIPE (D.I.P.), P.E x P.E.	100 LF.
3	INSTALL 3-INCH SCH. 40, 90° ELBOW.	2 EA.
4	INSTALL 3-INCH R.S.G.V.	1 EA.
5	INSTALL STAINLESS STEEL TAPPING SLEEVE ON MAIN WATER PER EVWD DWG. W-104.	1 EA.
6	3-INCH REDUCED PRESSURE PRINCIPAL BACKFLOW PREVENTION ASSEMBLY (RPP) PER EVWD STD. DWG. W-114.	1 EA.
7	INSTALL 3-INCH WATER METER PER EVWD STD. DWG. W-102.	1 EA.
8	INSTALL 3'x5' PRE-FABRIC VAULT AND LID.	1 EA.
9	2-INCH SCH. 40 STEEL PIPE.	176 LF.
10	INSTALL 2-INCH SCH. 40, 90° ELBOW.	2 EA.
11	INSTALL STAINLESS VALVE BOX PER EVWD DWG. W-119.	2 EA.
12	INSTALL 3-INCH SCH. 40, 45° ELBOW.	3 EA.
13	INSTALL 3-INCH SCH. 40, 22.5° ELBOW.	2 EA.

FIRE PROTECTION

1	INSTALL STAINLESS STEEL TAPPING SLEEVE ON MAIN WATER PER EVWD DWG. W-104.	1 EA.
2	INSTALL 8-INCH D.I.P. PIPE.	88 LF.
3	INSTALL 8-INCH C900, PVC PIPE.	615 LF.
4	INSTALL 8-INCH GATE VALVE FLG.xM.J.	1 EA.
5	INSTALL MEGALUG RESTRAIN	1 EA.
6	INSTALL LOW PROFILE DOUBLE DETECTOR CHECK ASSEMBLY (N-SHAPE) PER EVWD STD. DWG. W-110.	1 EA.
7	INSTALL 8x8x8-INCH TEE.	2 EA.
8	INSTALL 6-INCH, WET BARREL FIRE HYDRANT PER CITY OF SAN BERNARDINO STD. DWG. W-103B.	3 EA.
9	INSTALL 8-INCH 90° ELBOW	4 EA.
10	INSTALL RESTRAIN JOINTS PER EVWD SPECIFICATIONS.	1 SL.
11	INSTALL 8-INCH 22.5° FITTING.	3 EA.
12	INSTALL 8-INCH 45° ELBOW.	3 EA.
13	INSTALL 8-INCH X 6-INCH REDUCTION	1 EA.
14	INSTALL 6-INCH C900, PVC PIPE.	97 LF.
15	CONNECT FIRE LINE PER IN-BUILDING RISER DETAIL	1 EA.
16	INSTALL BOLLARDS PER EVWD STD. DWG. W-111.	8 EA.
17	INSTALL 6-INCH 90° ELBOW	1 EA.

DOMESTIC SEWER

1	INSTALL 6-INCH PVC PIPE, SDR35.	620 LF.
2	INSTALL PIPE CLEANOUT PER EVWD STD. DWG. S-107.	4 EA.
3	INSTALL 750 GALLON OIL INTERCEPTOR PER PLUMBING PLAN, SEE SHEET P5.1.	1 EA.
4	INSTALL SEWER LATERAL TYPICAL HOUSE CONNECTION PER EVWD STD. DWG. S-101.	1 EA.

LEGEND

- TAPPING SADDLE
- DDCA — DETECTOR DETECTOR CHECK ASSEMBLY
- POST INDICATOR VALVE
- GATE VALVE
- FIRE HYDRANT
- RPP — REDUCED PRESSURE PRINCIPAL
- POINT OF CONNECTION
- CLEAN OUT
- F.D.C.
- WATER METER

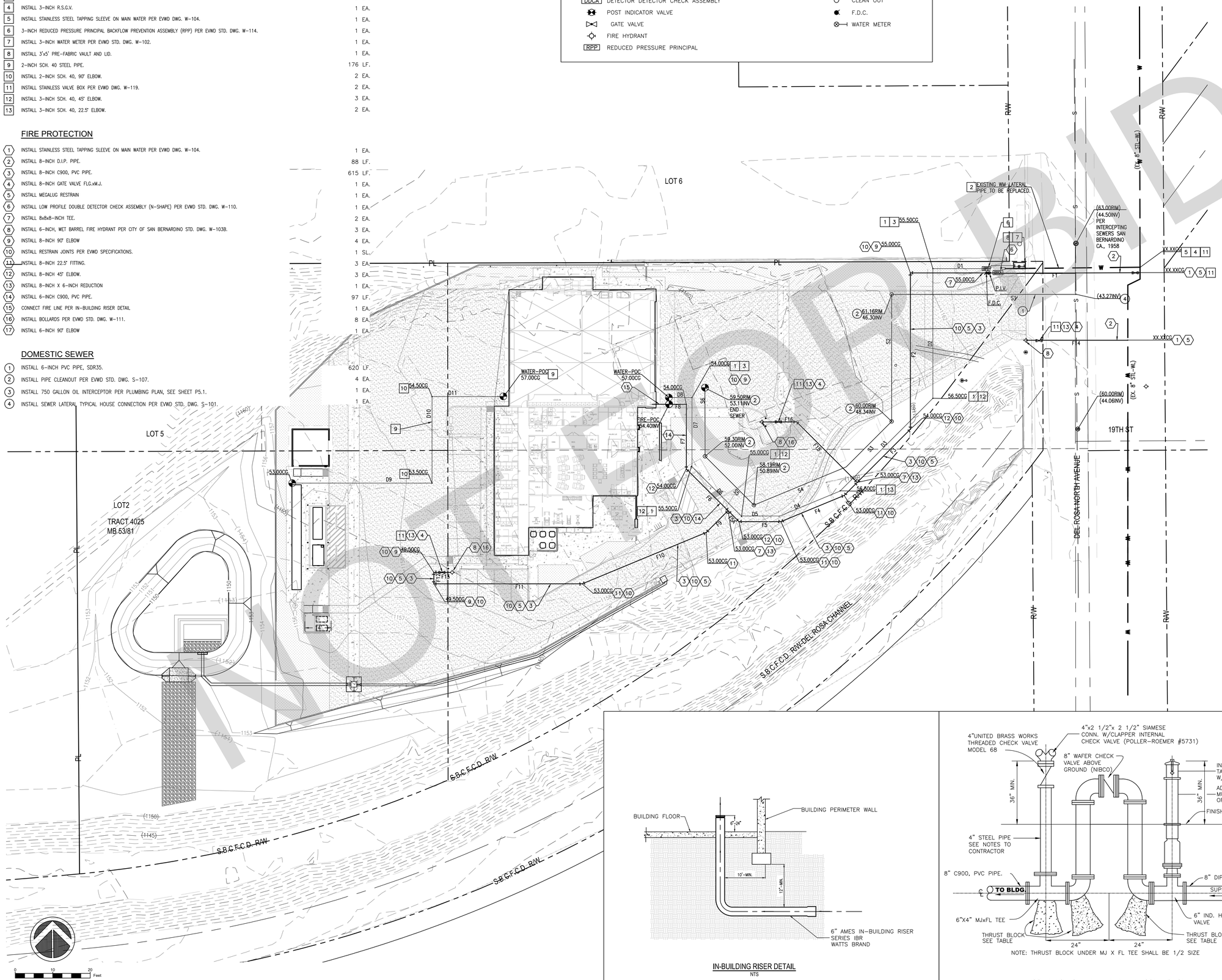

DOMESTIC WATER

Line #	Length	Direction
D1	32.83	N90° 00' 00.00"W
D2	69.19	S0° 00' 00.00"E
D3	69.99	S45° 00' 00.00"W
D4	34.85	S67° 30' 00.00"W
D5	20.55	N90° 00' 00.00"W
D6	37.24	S45° 00' 00.00"E
D7	46.70	N0° 00' 00.00"W
D8	14.22	N90° 00' 00.00"W
D9	74.43	N90° 00' 00.00"E
D10	51.55	N90° 00' 00.00"E
D11	51.44	N90° 00' 00.00"E

FIRE PROTECTION

Line #	Length	Direction
F1	122.55	N90° 00' 00.00"W
F2	83.40	S0° 00' 00.00"E
F3	50.00	S45° 00' 00.00"W
F4	36.52	S67° 30' 00.00"W
F5	22.39	N90° 00' 00.00"W
F5A	08.30	S45° 00' 00.00"E
F6	31.44	S45° 00' 00.00"E
F7	34.50	N0° 00' 00.00"E
F8	9.22	N90° 00' 00.00"E
F9	16.44	S45° 00' 00.00"W
F10	71.64	S67° 30' 00.00"W
F11	79.18	S89° 59' 13.33"W
F12	6.00	N0° 07' 43.89"W
F13	8.99	N90° 00' 00.00"E
F14	54.33	N90° 00' 00.00"E
F15	45.63	S45° 00' 00.00"E
F16	18.51	N89° 59' 53.30"E

DOMESTIC SEWER

Line #	Length	Direction
S1	98.36	N90° 00' 00"W
S2	67.78	S00° 00' 00"E
S3	34.33	S45° 00' 00.00"W
S4	53.29	S67° 30' 00.00"W
S5	36.87	N45° 00' 00.00"W
S6	53.41	N0° 00' 00.00"E

IN-BUILDING RISER DETAIL
NTS

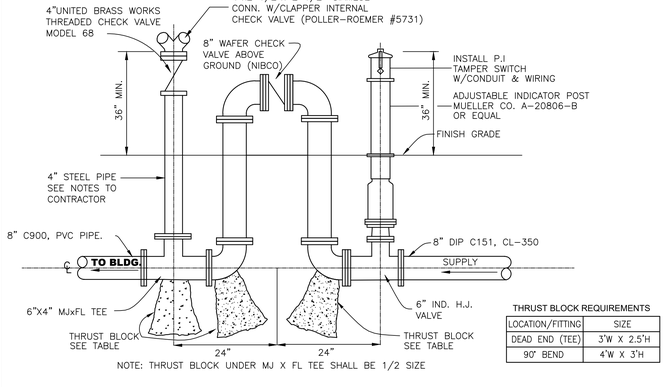

THRUST BLOCK REQUIREMENTS

LOCATION/FITTING	SIZE
DEAD END (TEE)	3'W X 2.5'H
90° BEND	4'W X 3'H

POST INDICATOR FIRE DEPARTMENT CONNECTION
NTS

STK ENGINEERING, INC.
42095 ZEVO DR., TEMECULA, CALIFORNIA 92590-3780
Phone: 951.296.9110 Fax: 951.296.6079 Email: stk@stkinc.com

CONSULTANT:

ERSC INC.COM
Engineering Resources of Southern California
1861 W. Redlands Blvd, Bldg 7B
Redlands, Ca. 92373
P: (909) 890-1255
F: (909) 890-0995

PROJECT ADMINISTERED BY:
SAN BERNARDINO COUNTY
PROJECT & FACILITIES
MANAGEMENT DEPARTMENT

385 N. ARROWHEAD AVE.
SAN BERNARDINO, CA 92415

PROJECT NAME:

SAN BERNARDINO
COUNTY FIRE
DEPARTMENT:
FIRE STATION 226

PROJECT # 10.10.1032
CIP #21-037
CAFM # SAB198
APN # 0273-011-22

1920 DEL ROSA AVE N.
SAN BERNARDINO,
CA 92404

ISSUE INFORMATION:

DATE:	INFORMATION:
04-11-2022	20% CD SET
04-28-2022	50% CD SET
06-15-2022	95% CD SET
09-16-2022	95% CD- 3rd BAY
10-03-2022	PLAN CHECK

SHEET INFORMATION:

STK PROJECT NO.: 374-154-21
SCALE: AS NOTED
DATE: JANUARY 2021
PLOT DATE: –
DRAWING NAME:

SEAL:

REGISTERED PROFESSIONAL ENGINEER — THOMAS A. BRIDT — 41836 — EXP. 12/31/22 — CIVIL — STATE OF CALIFORNIA

= 20'-0"
Issue Date

SHEET TITLE:

UTILITY PLAN

SHEET NO.:

C3.1

EROSION CONTROL CONSTRUCTION NOTES

1. SILT FENCE (SC-1).
2. STABILIZED CONSTRUCTION ENTRANCE/EXIT (TC-1) WITH RUMBLE RACKS (10'x24' MIN.).
3. GRAVEL BAG BERM (SC-6).
4. MATERIAL DELIVERY AND STORAGE (WM-01).
5. VEHICLE STORAGE.
6. SOLID WASTE MANAGEMENT AREA (WM-05).
7. VEHICLE AND EQUIPMENT MAINTENANCE AREA (NS-10)
8. STORM DRAIN INLET PROTECTION TYPE 2. (SE-10)

LEGEND

- GRAVEL BAGS
- SILT FENCE
- FLOW PATH
- STABILIZED CONSTRUCTION ENTRANCE
- MATERIAL DELIVERY/STORAGE AREA
- VEHICLE STORAGE AND MAINTENANCE AREA
- VEHICLE WASHING AREA
- WASTE STORAGE AREA

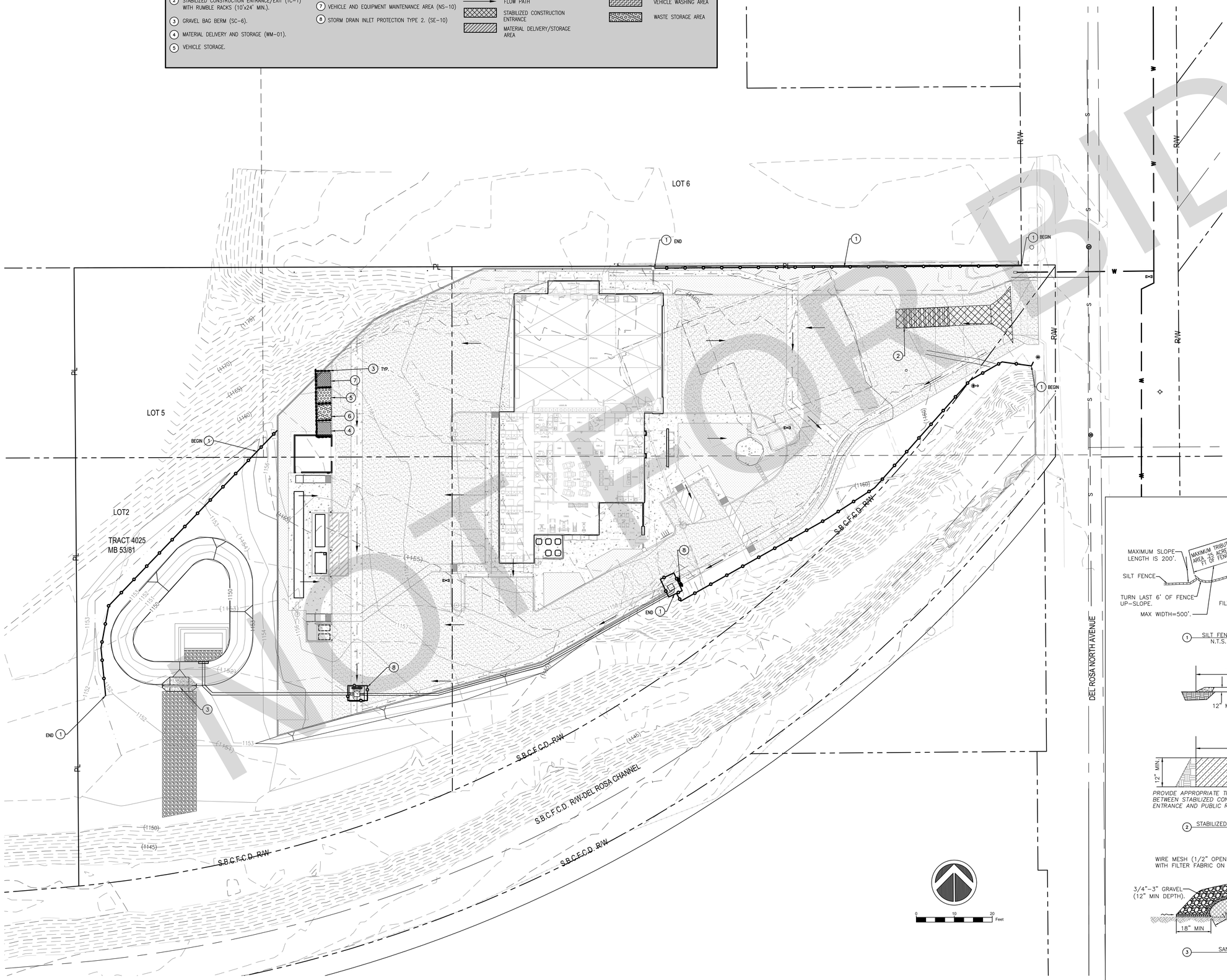

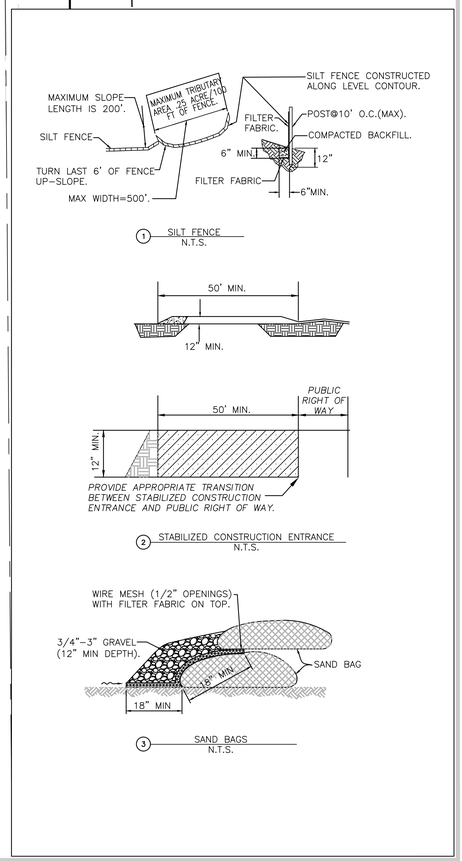

STK ENGINEERING, INC.
42095 ZEVO DR., TEMECULA, CALIFORNIA 92590-3780
Phone: 951.296.9110 Fax: 951.296.6079 Email: stk@stkinc.com

CONSULTANT:

ERSC INC.COM
Engineering Resources of Southern California
1861 W. Redlands Blvd, Bldg 7B
Redlands, Ca. 92373
P: (909) 890-1255
F: (909) 890-0995

PROJECT ADMINISTERED BY:
SAN BERNARDINO COUNTY
PROJECT & FACILITIES
MANAGEMENT DEPARTMENT

385 N. ARROWHEAD AVE.
SAN BERNARDINO, CA 92415

PROJECT NAME:

SAN BERNARDINO
COUNTY FIRE
DEPARTMENT:
FIRE STATION 226

PROJECT # 10.10.1032
CIP #21-037
CAFM # SAB198
APN # 0273-011-22

1920 DEL ROSA AVE N.
SAN BERNARDINO,
CA 92404

ISSUE INFORMATION:

DATE:	INFORMATION:
04-11-2022	20% CD SET
04-28-2022	50% CD SET
06-15-2022	95% CD SET
09-16-2022	95% CD- 3rd BAY
10-03-2022	PLAN CHECK

SHEET INFORMATION:

STK PROJECT NO.: 374-154-21
SCALE: AS NOTED
DATE: JANUARY 2021
PLOT DATE: -
DRAWING NAME:

SEAL:

REGISTERED PROFESSIONAL ENGINEER
JOHN A. BRIDA
No. 41836
Exp. 12/31/22
CIVIL
STATE OF CALIFORNIA

= 20'-0"
Issue Date

SHEET TITLE:

EROSION CONTROL

SHEET NO.:

C4.1

T:\Projects\0000\0006 - Fire Station No. 226\DESIGN\CAD\FS226-3rd bay design\FS226-3rd-bay-design-09-16-2022_revised.dwg
09/26/2022 9:34AM

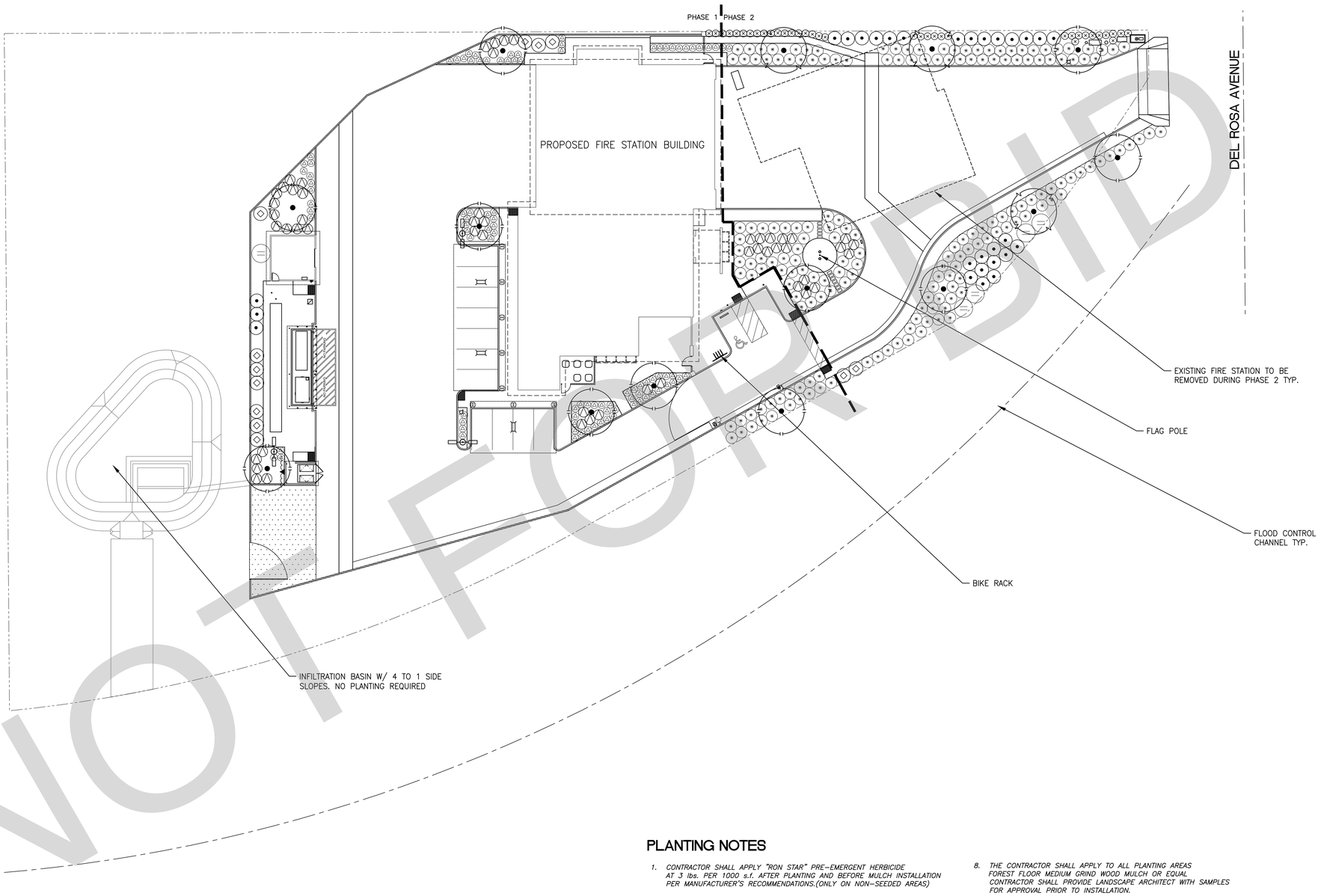

NOT FOR BID

PLANTING LEGEND

SYMBOL	BOTANICAL NAME	COMMON NAME	SIZE	NUMBER	REMARKS	WUCOLS IV
	TREES:					
	LAURUS NOBILIS 'SARATOGA'	BAY LAUREL	24" BOX	3	DOUBLE STAKE / HEIGHT 8–10' , SPREAD 3'–4' MIN.	L
	CERCIDIUM 'DESERT MUSEUM'	DESERT MUSEUM PALO VERDE	24" BOX	11	DOUBLE STAKE / HEIGHT 8–10' , SPREAD 3'–4' MIN.	L
	SHRUBS:					
	BACCHARIS PILULARIS 'PIGEON POINT'	PROSTRATE COYOTE BUSH	1 GAL	179	TRIANGULAR SPACING @ 5' O.C.	L
	HESPERALOE PARVIFLORA	RED YUCCA	5 GAL	52	FULL & BUSHY @ 4' O.C.	L
	CALLISTEMON VIMINALIS 'LITTLE JOHN'	LITTLE JOHN BOTTLEBRUSH	5 GAL.	36	FULL & BUSHY @ 3' O.C.	L
	DIANELLA 'LITTLE REV'	LITTLE REV FLAX	5 GAL	96	FULL & BUSHY @ 3' O.C.	L
	ACACIA REDOLENS 'DESERT CARPET'	PROSTRATE ACACIA	1 GAL	5	TRIANGULAR SPACING @ 8' O.C.	L
	LEUCOPHYLLUM FRUTESCENS 'GREEN CLOUD'	GREEN TEXAS RANGER	5 GAL	28	FULL & BUSHY @ 6' O.C.	L
	CAESALPINIA PULCHERRIMA	MEXICAN BIRD OF PARADISE	5 GAL	12	FULL & BUSHY @ 6' O.C.	L
	VINES:					
	MACFADYENA UNGUIS–CATI	CAT'S CLAW	5 GAL	1	ATTACH TO WALLS	L
	MULCH :					
NOT SHOWN	MEDIUM GRIND WOOD MULCH	SHREDDED WOOD MULCH	3" MIN.	AS REQ'D.	3" DEEP – INSTALL TO ALL PLANTING AREAS	

PLANTING NOTES

1. *CONTRACTOR SHALL APPLY "RON STAR" PRE–EMERGENT HERBICIDE AT 3 lbs. PER 1000 s.f. AFTER PLANTING AND BEFORE MULCH INSTALLATION PER MANUFACTURER'S RECOMMENDATIONS.(ONLY ON NON–SEEDED AREAS)*
2. *ALL PLANTING SHALL CONFORM TO THE COUNTY OF SAN BERNARDINO DEVELOPMENT CODES AND STANDARDS.*
3. *SOIL TESTING: CONTRACTOR SHALL PROVIDE A HORTICULTURAL SOILS ANALYSIS PERFORMED BY A LABORATORY OF THE CALIFORNIA ASSOC. OF AGRICULTURAL LABORATORIES. SOIL ANALYSIS SUBMITTED TO THE CITY SHALL INCLUDE THE FOLLOWING: SOIL TEXTURE, PERCENTAGE OF ORGANIC MATTER, SOIL INFILTRATION RATE (DERIVED FROM SOIL TEXTURE/ INFILTRATION RATE TABLES), PH AND TOTAL SOLUBLE SALTS. CONTRACTOR SHALL SPECIFICALLY REQUEST THE SOILS LAB TO PROVIDE AMENDMENT RECOMMENDATIONS.*
4. *CONTRACTOR SHALL ENSURE POSITIVE DRAINAGE OF ALL PLANTING AREAS ON SITE AND SUBSURFACE DRAINAGE FOR ENCLOSED PLANTING AREAS.*
5. *THE CONTRACTOR SHALL CAREFULLY INSPECT THE SITE AND VERIFY ALL THE CONDITIONS AND DIMENSIONS PRIOR TO PROCEEDING WITH ANY WORK. NOTIFY LANDSCAPE ARCHITECT AND OWNER IF ANY INCONSISTENCIES OCCUR.*
6. *THE CONTRACTOR SHALL REMOVE ALL WEEDS, ROCKS, DEBRIS AND OTHER EXTRANEOUS MATERIALS FROM THE JOB SITE PRIOR TO PROCEEDING WITH ANY WORK.*
7. *ALL PLANT MATERIALS SHALL BE HANDLED OR STORED SO THAT THEY ARE ADEQUATELY PROTECTED FROM DRYING OUT, FROM SUN OR WIND BURN, OR FROM ANY OTHER INJURY.*
8. *THE CONTRACTOR SHALL APPLY TO ALL PLANTING AREAS FOREST FLOOR MEDIUM GRIND WOOD MULCH OR EQUAL. CONTRACTOR SHALL PROVIDE LANDSCAPE ARCHITECT WITH SAMPLES FOR APPROVAL PRIOR TO INSTALLATION.*
9. *CONTRACTOR TO VERIFY ALL PLANT QUANTITIES SHOWN ON PLANS.*
10. *SEE SHEET L–3 FOR DETAILS & SPECIFICATIONS.*
11. *ALL ABOVE GROUND UTILITIES SHALL BE SCREENED W/ PLANTING. CONTACT CITY LANDSCAPE ARCHITECT REGARDING LOCATIONS.*
12. *ALL PLANTING SHALL NOT INTERFERE W/ TRAFFIC SITE LINES.*
13. *CONTRACTOR SHALL TURN OVER SOIL AMENDMENT VERIFICATION TICKETS TO THE CITY INSPECTOR.*
14. *INSTALL CENTURY PRODUCTS .0060" SIZE NON–PANELED ROOT BARRIERS ADJACENT TO HARDSCAPE WHEN TREES ARE PLANTED 5' FROM THE HARDSCAPE TYP. SEE DETAILS & SPECIFICATIONS.*
15. *CONTACT THE COUNTY REPRESENTATIVE FOR FINAL INSPECTION WHEN ALL WORK IS COMPLETED.*
16. *TREES & SHRUBS SHALL BE PLACED A MINIMUM OF 5' AWAY FROM WATER METER, GAS METER, OR SEWER LATERALS; A MINIMUM OF 10' AWAY FROM UTILITY POLES; & A MINIMUM OF 8' AWAY FROM FIRE HYDRANTS & FIRE DEPARTMENT SPRINKLER & STANDPIPE CONNECTIONS.*

SCALE: 1"=20'–0"

STK
42095 ZEVO DR., TEMECULA, CALIFORNIA 92590-3780
Phone: 951.296.9110 Fax: 951.296.6079 Email: stk@stkinc.com

CONSULTANT:

ALHAMBRA GROUP
LANDSCAPE ARCHITECTURE
CALIFORNIA LICENSE #2017
RECREATION FACILITIES PLANNING
41635 ENTERPRISE CIRCLE NORTH, SUITE C
TEMECULA, CA 92590 (951) 296–6802

PROJECT ADMINISTERED BY:
SAN BERNARDINO COUNTY
REAL ESTATE SERVICES
DEPARTMENT -
PROJECT MANAGEMENT
DIVISION

385 N. ARROWHEAD AVE.
SAN BERNARDINO, CA 92415

PROJECT NAME:

SAN BERNARDINO COUNTY FIRE DEPARTMENT:

FIRE STATION 226

PROJECT # 10.10.1032
CIP # _____
CAFM # _____

1920 DEL ROSA AVE N.
SAN BERNARDINO,
CA 92404

ISSUE INFORMATION:

DATE:	INFORMATION:
04–11–2022	20% CD SET
04–28–2022	50% CD SET
06–15–2022	95% CD SET
09–16–2022	95%CD SET–3rd Bay
10–03–2022	PLAN CHECK

SHEET INFORMATION:

STK PROJECT NO.: 374–154–21
SCALE: AS NOTED
DATE: SEPTEMBER 2022
PLOT DATE: –
DRAWING NAME:

SEAL:

REGISTERED LANDSCAPE ARCHITECT
VINCENT DI DONATO
10–03–22
9–30–23
EXPIRATION
STATE OF CALIFORNIA

SHEET TITLE:

PLANTING PLAN

SHEET NO.:

L-1
OF 3

09/27/2022 11:10AM F:\JOBS\2022\2022-114-SBC-Fire-Station-226\2114-fs-fire.dwg

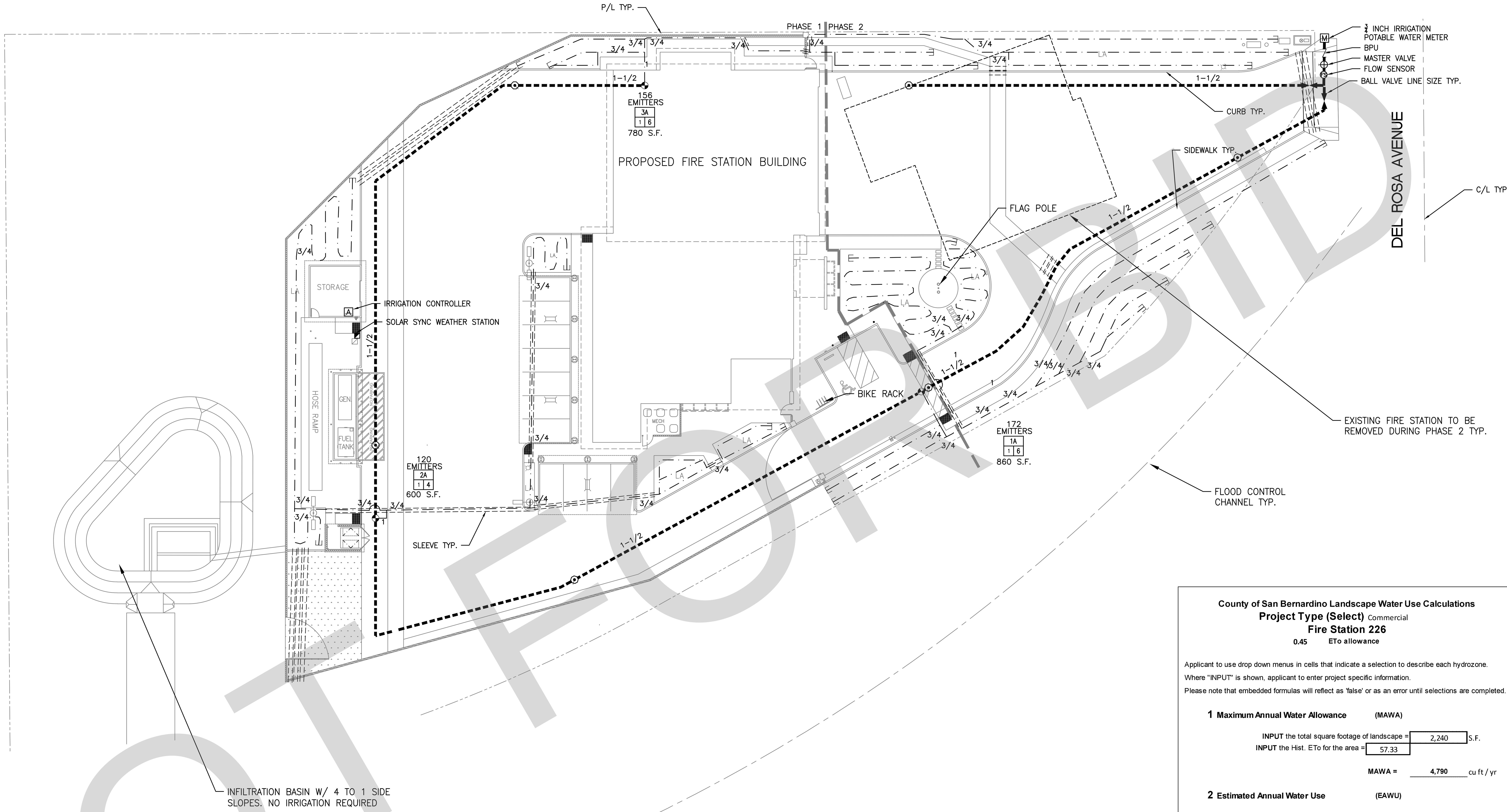

BLU-LOCK SPECIFICATIONS

HIGH DENSITY POLYETHYLENE PIPE AND FITTINGS:

A. ALL PIPE SHALL BE CONSTRUCTED OF VIRGIN HIGH DENSITY POLYETHYLENE (HDPE)
RESIN WITH THE CELL CLASSIFICATION OF 345464C PER ASTM D 2239 OR ASTM D 2737. THE MATERIAL SHALL CONTAIN 2% CARBON BLACK AS A UV INHIBITOR TO ACCOMMODATE OUTSIDE STORAGE.

B. ALL PIPE FITTINGS SHALL BE CONSTRUCTED FOR QUICK COUPLE PUSH-ON INSTALLATION WITHOUT THE USE OF GLUE OR CLAMPS ONTO 1/2" SWING, OR 3/4", OR 1", HDPE 3408 SIDR 15 LATERAL PIPE.

C. FITTINGS SHALL BE BUILT OF ABS MATERIAL WITH A STAINLESS STEEL RETAINING RING AND EPDM SEAL MATERIAL.

D. FITTINGS SHALL BE FOR OUTDOOR USE ONLY ON COLD WATER, NOT FOR USE ON CONSTANT PRESSURE, DESIGNED FOR USE ON LATERALS ONLY OR FOR USE ON ALL SYSTEM LINES FROM THE MASTER VALVE OUT.
TYPE: HYDRO-RAIN BLU LOCK OR APPROVED EQUAL

IRRIGATION NOTES

1. IRRIGATION SYSTEM IS SHOWN DIAGRAMMATICALLY. LOCATE ALL PIPE AND EQUIPMENT WITHIN PLANTING AREAS WHEREVER POSSIBLE.
2. LOCATE PRESSURE LINES WITHIN 18" OF EDGE OF HARDSCAPE IN PLANTING AREAS.
3. TREE LOCATIONS TAKE PRECEDENCE OVER IRRIGATION PIPING & DRIP LINE. STAKE TREE LOCATIONS PRIOR TO TRENCHING PIPE.
4. CONTRACTOR SHALL ARRANGE AND PAY FOR ALL NECESSARY CONNECTIONS FOR 120V A.C. ELECTRICAL SERVICE TO IRRIGATION CONTROLLER.
5. CONTRACTOR SHALL INSPECT THE SITE AND VERIFY ALL CONDITIONS PRIOR TO PROCEEDING WITH ANY WORK. TO ALLOW FOR ADEQUATE IRRIGATION COVERAGE AS SHOWN ON PLAN, ADJUST DRIP LINE & EMITTERS TO COMPENSATE FOR ANY CHANGES IN AREA.
6. TO ENSURE PROPER LOCATION OF IRRIGATION SLEEVE INSTALLATION COORDINATE LOCATION OF MAINLINE, DRIP LINES AND CONTROL WIRES WITH ALL OTHER RELATED TRADES AS REQ.
7. ALL BRASS FITTINGS TO BE RED BRASS TYPICAL.
8. USE 3/4" TEFLON TAPE ON ALL THREADED CONNECTIONS.
9. IRRIGATION SYSTEMS DESIGNED FROM A STATIC WATER PRESSURE OF 60.0 P.S.I., CONTRACTOR SHALL VERIFY WATER PRESSURE AT WORST CONDITION AND CONTACT LANDSCAPE ARCHITECT IF ANY INCONSISTENCIES OCCUR.
10. CONTROL WIRE SCHEDULE: (MAX. LENGTH OF RUNS)

CONTROL/COMMON	NO. 14	NO. 12	NO. 10	NO. 8
NO. 14	1700'	2000'	2400'	2700'
NO. 12		2700'	3300'	3800'
NO. 10			4300'	5200'
NO. 8				6700'

11. ABOVE WIRING SCHEDULE IS BASED ON THE USE OF A 24 VOLT AUTOMATIC IRRIGATION CONTROLLER & WIRE SIZE IS BASED ON OPERATING ONE VALVE AT A TIME.
12. ALL IRRIGATION SHALL CONFORM TO THE COUNTY OF SAN BERNARDINO STANDARDS AND SPECIFICATIONS.

EMITTERS
1A — VALVE SEQUENCE NUMBER
10 — GALLONS PER MINUTE
1 — REMOTE CONTROL VALVE SIZE
AREA — STATION AREA

IRRIGATION LEGEND

SYMBOL	MANUFACTURER	MODEL NO.	REMARKS – SEE SHEET L-3 FOR DETAILS AND SPECIFICATIONS
A	HUNTER	ACC-600	6 STATION AUTOMATIC CONTROLLER W/6 STN MODULE IN A METAL CABINET AND WALL MOUNT NEAR A 120V A.C.
	FEBCO	825-YA	3/4" REDUCED PRESSURE B.P.U.
	HUNTER	SOLAR SYNC	ET MODULE AND WEATHER STATION, INSTALL ON BUILDING UNOBSTRUCTED BY TREES AND OVERHANGS.
	RAINBIRD	XCZ-100-PRB-COM	1" REMOTE CONTROL VALVE KIT (INCLUDING FILTER W/ 30 P.S.I. REGULATOR)
	HUNTER	ICV-151G	1-1/2" MASTER CONTROL VALVE
FS	HUNTER	HFS/FCT-100	HUNTER FLOW SENSOR WITH 1" FLOW SENSOR BODY, INSTALL PER MANUFACTURER'S RECOMMENDATION
	RAINBIRD	33DLRC	QUICK COUPLING VALVE – WITH LOCKABLE COVER
NOT SHOWN	BOWSMITH	SB-20	NON-STOP DRIP EMITTER (2 GPH), 3 PER LOW WATER USE TREE, 1 PER LOW WATER USE SHRUB
	FLO-CONTROL	1520-10/1012-10	LINE SIZE SWING/SPRING CHECK VALVE. SWING TYPE FOR UPHILL & SPRING TYPE FOR DOWNHILL.
	NIBCO	UB SERIES	PLASTIC BALL VALVE (THREADED) LINE SIZE – TYPICAL
	PAC. PLASTICS	SCHEDULE 40	PVC PRESSURE TYPE MAINLINE – INSTALL WITH 18" MINIMUM COVER
	PAC. PLASTICS	CLASS 315	NON-PRESSURE TYPE SLEEVE
	HYDRO-RAIN	'BLU-LOCK'	NON-PRESSURE LATERAL LINE-INSTALL 2" BELOW GRADE EXCEPT UNDER HARDSCAPE, SEE DETAILS.
NOT SHOWN	RAINBIRD	POLY	MICRO (SPAGHETTI) POLYTUBE WITH STAKES
	HYDRO-RAIN	MODEL 5024	AUTO DRAIN FLUSH VALVE

PRESSURE LOSS CALC'S

VALVE 2A @ 7 G.P.M.
PRESSURE AVAILABLE AT METER : 60.0 P.S.I.
REGULATED PRESSURE: 60.0 P.S.I.

EQUIPMENT	SIZE	P.S.I. LOSS
METER	1"	(1.0)
B.P.U.	1"	(11.0)
MASTER VALVE	1-1/2"	(1.5)
BALL VALVE	1-1/2"	(.1)
R.C.V.	1"	(1.5)
MAIN LINE	1-1/2"	(0.5)
FLOW SENSOR	1"	(4.5)

P.S.I. LOSS BEFORE PRESSURE REGULATOR: (18.1 P.S.I)
PRESSURE AVAILABLE AT REGULATOR: 41.9 P.S.I.
REGULATOR REDUCES PRESSURE TO: 40.0 P.S.I.

EQUIPMENT	SIZE	P.S.I. LOSS
LATERAL LINES	VARIES	(3.0)
EMITTERS	N/A	(25.0)
ELEVATION CHANGE	0'	(0)

P.S.I. LOSS AFTER PRESSURE REGULATOR: (28.0 P.S.I.)
TOTAL RESIDUAL PRESSURE: 12.0 P.S.I.

LOW DRIP IRRIGATION SCHEDULE

	ETO	% ETO	CU. FT.	GALLONS	DAYS	GPM	MIN	G/DAY
JANUARY	2.17	0.04	124	930.36	4.00	17.60	13	233
FEBRUARY	2.84	0.05	163	1,218.33	5.00	17.60	14	244
MARCH	4.03	0.07	231	1,727.81	7.00	17.60	14	247
APRIL	4.55	0.08	261	1,949.33	8.00	17.60	14	244
MAY	6.10	0.11	349	2,613.87	11.00	17.60	14	238
JUNE	7.65	0.13	438	3,278.42	13.00	17.60	14	252
JULY	7.86	0.14	450	3,367.02	14.00	17.60	14	241
AUGUST	7.24	0.13	415	3,101.21	13.00	17.60	14	239
SEPTEMBER	6.00	0.10	344	2,569.57	10.00	17.60	15	257
OCTOBER	4.03	0.07	231	1,727.81	7.00	17.60	14	247
NOVEMBER	2.69	0.05	154	1,151.88	5.00	17.60	13	230
DECEMBER	2.17	0.04	124	930.36	4.00	17.60	13	233
	57.33	1.00	3,284	24,565.98				

RUN EACH SYSTEM FOR THE MINUTES SHOWN EVERY DAY DURING THE ESTABLISHMENT PERIOD

County of San Bernardino Landscape Water Use Calculations
Project Type (Select) Commercial
Fire Station 226
0.45 **ETo allowance**

Applicant to use drop down menus in cells that indicate a selection to describe each hydrozone.
Where "INPUT" is shown, applicant to enter project specific information.
Please note that embedded formulas will reflect as 'false' or as an error until selections are completed.

1 Maximum Annual Water Allowance **(MAWA)**

INPUT the total square footage of landscape = 2,240 S.F.
INPUT the Hist. ETo for the area = 57.33

MAWA = 4,790 cu ft / yr

2 Estimated Annual Water Use **(EAWU)**

Hydrozone # 1 Plant Factor = 0.2 — **Plant Type** *Shrubs / Groundcover* — **Water Use** *Low*
INPUT Square Foot Area of Hydrozone = 2,240
Hydrozone Irrigation Efficiency = 0.90 *Point Source Drip*
EAWU = 2,365 cu ft / yr

Hydrozone # 2 Plant Factor = 0 — **Plant Type** *SELECT* — **Water Use** *SELECT*
INPUT square footage of hydrozone = 0
Hydrozone Irrigation Efficiency = 1 *n/a*
EAWU = 0 cu ft / yr

Hydrozone # 3 Plant Factor = 0 — **Plant Type** *SELECT* — **Water Use** *SELECT*
INPUT square footage of hydrozone = 0
Hydrozone Irrigation Efficiency = 1 *n/a*
EAWU = 0 cu ft / yr

Hydrozone # 4 Plant Factor = 0 — **Plant Type** *SELECT* — **Water Use** *SELECT*
INPUT square footage of hydrozone = 0
Hydrozone Irrigation Efficiency = 1 *n/a*
EAWU = 0 cu ft / yr

Hydrozone # 5 Plant Factor = 0 — **Plant Type** *SELECT* — **Water Use** *SELECT*
INPUT square footage of hydrozone = 0
Hydrozone Irrigation Efficiency = 1 *n/a*
EAWU = 0 cu ft / yr

Hydrozone # 6 Plant Factor = 0 — **Plant Type** *SELECT* — **Water Use** *SELECT*
INPUT square footage of hydrozone = 0
Hydrozone Irrigation Efficiency = 1 *n/a*
EAWU = 0 cu ft / yr

SubTotal EAWU = 2,365 cu ft / yr
Input Irrigation System Operation Factor 0.85
Total EAWU = 2,782
MAWA - EAWU = 2,008 cu ft / yr
(this number must be positive)

PERCENTAGE OF WATER SAVED RELATIVE TO MAX. ALLOWED = 42%

IRRIGATED AREA IS CALCULATED @ 5 S.F. PER DRIP EMITTER, THE WETTABLE AREA OF EACH TREE AND SHRUB

SCALE: 1"=20'-0"

STK ARCHITECTURE, INC.
42095 ZEVO DR., TEMECULA, CALIFORNIA 92590-3780
Phone: 951.296.9110 Fax: 951.296.6079 Email: stk@stkinc.com

CONSULTANT:
ALHAMBRA GROUP
LANDSCAPE ARCHITECTURE
CALIFORNIA LICENSE #2017
RECREATION FACILITIES PLANNING
41635 ENTERPRISE CIRCLE NORTH, SUITE C
TEMECULA, CA 92590 (951) 296-6802

PROJECT ADMINISTERED BY:
SAN BERNARDINO COUNTY
REAL ESTATE SERVICES
DEPARTMENT -
PROJECT MANAGEMENT
DIVISION

385 N. ARROWHEAD AVE.
SAN BERNARDINO, CA 92415

PROJECT NAME:
SAN BERNARDINO
COUNTY FIRE
DEPARTMENT:
FIRE STATION 226

PROJECT # 10.10.1032
CIP # ______
CAFM # ______

1920 DEL ROSA AVE N.
SAN BERNARDINO,
CA 92404

ISSUE INFORMATION:

DATE:	INFORMATION:
04-11-2022	20% CD SET
04-28-2022	50% CD SET
06-15-2022	95% CD SET
09-16-2022	95%CD SET-3rd Bay
10-03-2022	PLAN CHECK

SHEET INFORMATION:
STK PROJECT NO.: 374-154-21
SCALE: AS NOTED
DATE: SEPTEMBER 2022
PLOT DATE: –
DRAWING NAME:

SEAL:
REGISTERED LANDSCAPE ARCHITECT
VINCENT DI DONATO – 2017
Vincent DiDonato
SIGNATURE
10-03-22
DATE
9-30-23
EXPIRATION DATE
STATE OF CALIFORNIA

SHEET TITLE:
IRRIGATION
PLAN

SHEET NO.:
L-2
OF 3

09/27/2022 11:10AM C:\Users\vince\AppData\Local\Temp\AcPublish_3180\22115-ir.dwg

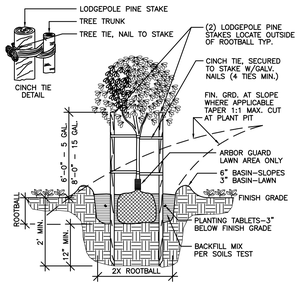

1 L-3 TREE PLANTING AND STAKING

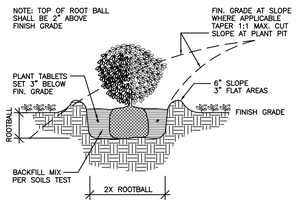

2 L-3 SHRUB PLANTING

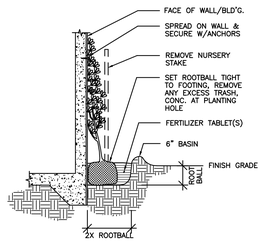

3 L-3 VINE DETAIL

NOTES:
1. TOP OF ROOT CONTROL BARRIER MUST BE AT GRADE (NEVER BELOW GRADE).
2. POSITION ROOT CONTROL BARRIER AS CLOSE TO STRUCTURE AS POSSIBLE.
3. DURING CONSTRUCTION BARRIER CAN BE PLACED AGAINST INSIDE OF FORMS.
4. THE RAISED ROOT DEFLECTORS MUST BE FACING TOWARD THE TREE.
5. BARRIER TO EXTEND A MINIMUM OF 8" BELOW BOTTOM OF HARDSCAPE.
6. FOR MOST TREES 10–12 FEET OF BARRIER WILL BE ADEQUATE.

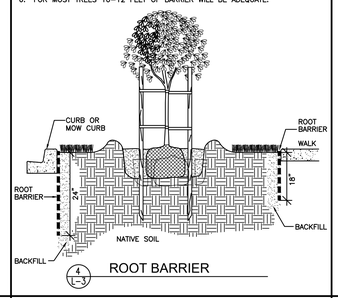

4 L-3 ROOT BARRIER

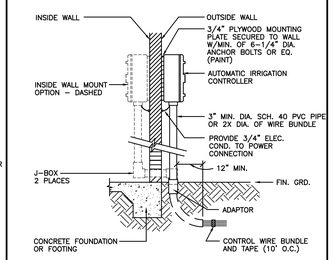

5 L-3 CONTROLLER WALL MOUNT

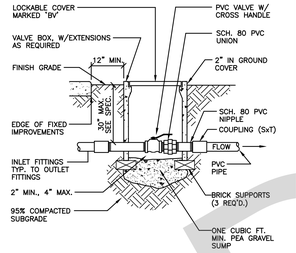

6 L-3 BALL VALVE

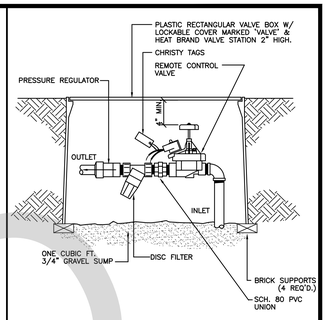

7 L-3 REMOTE CONTROL VALVE

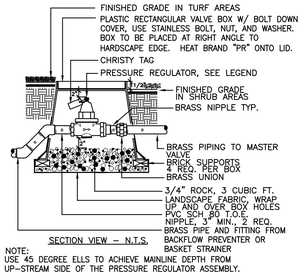

NOTE:
USE 45 DEGREE ELLS TO ACHIEVE MAINLINE DEPTH FROM UP–STREAM SIDE OF THE PRESSURE REGULATOR ASSEMBLY.

8 L-3 PRESSURE REGULATOR

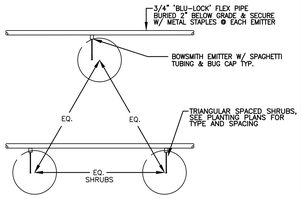

NOTE:
DRIP EMITTER SHALL BE PLACED TO DRIP DIRECTLY ADJACENT TO PLANT ROOTBALL.

PVC LATERAL SUPPLY LINES SHALL RUN PARALLEL TO SLOPE WITH DRIP EMITTER LINES RUN PERPENDICULAR TO SLOPE AS SHOWN ABOVE.

ALL IRRIGATION SHALL BE COMPLETELY INSTALLED PRIOR TO PLANT LAYOUTS.

9 L-3 DRIP EMITTER ASSEMBLY DETAIL

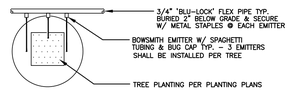

NOTE:
DRIP EMITTERS SHALL BE PLACED TO DRIP DIRECTLY ADJACENT TO TREE ROOTBALL. ALL IRRIGATION SHALL BE COMPLETELY INSTALLED PRIOR TO PLANTING LAYOUT.

10 L-3 TREE DRIP LAYOUT

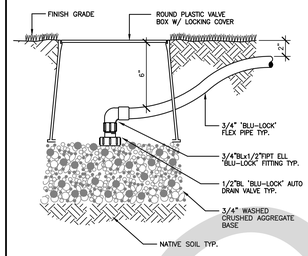

11 L-3 END FLUSH CAP

NOTE
WIRE FROM MODULE TO SENSOR SHALL BE 18/2. USE CONTROLLER SMART PORT TO CONNECT TO MODULE UNIT.

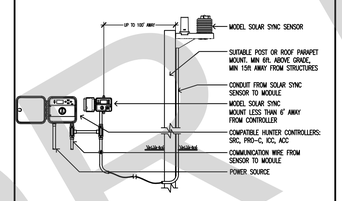

12 L-3 SOLAR SYNC SYSTEM

IRRIGATION

1. INTENT – TO INDICATE AND SPECIFY A COMPLETE AND EFFICIENT SPRINKLER IRRIGATION SYSTEM, READY FOR USE, WITH ALL WORK AND MATERIAL CONFORMING TO GOVERNING CODES.

2. ALL DIMENSIONS AND LOCATIONS SHOWN ARE DIAGRAM SITE CONDITIONS AND SHALL BE VERIFIED BEFORE INITIATING WORK.

3. ALL WORK SHALL BE INSTALLED IN THE MOST DIRECT AND WORKMANLIKE MANNER WITHOUT INTERFERING WITH EXISTING OR PROPOSED PLANTING OR OTHER WORK AND UTILITY LINES.

4. IRRIGATION MATERIALS

VALVE BOXES: PLASTIC BOXES SIZES AS REQUIRED.

PLASTIC PIPING: ALL PRESSURE PIPE, SCHEDULE 40 PVC SOLVENT WELD TYPE, OR BETTER. NON–PRESSURE PIPE, BLU–LOCK HDPE PIPE TYP.

PLASTIC FITTINGS: TYPE I, SCHEDULE 80 PVC.

POLYETHYLENE: MOLDED, 85 P.S.I.

BALL VALVES: PLASTIC BODIED, 125 P.S.I. MINIMUM, HEAVY DUTY TYPE, FEDERAL SPEC, CROSS HANDLE.

DRIP EMITTERS: OF MODEL AND TYPE SHOWN ON PLANS.

CONTROL WIRE: DIRECT BURIAL, UL APPROVED; WHITE FOR COMMON, BLACK FOR CONTROL; 12 GAUGE MINIMUM SIZE COMMON, 14 GAUGE MINIMUM SIZE CONTROL WIRE. 2–WIRE SYSTEM

QUICK COUPLING VALVES: SINGLE LUG, TWO PIECE; PER LEGEND.

EXTRA STOCK: SUPPLY OWNER WITH VALVE KEYS, EXTRA EMITTERS, TWO QUICK COUPLING HOSE BIBS, AND MANUALS FOR EQUIPMENT USED.

5. EXCAVATION

TRENCHES SHALL BE CUT TO FOLLOWING REQUIRED GRADES: PRESSURE PIPE AT (18") MIN. COVER; ALL NON–PRESSURE PIPE

6. PIPE FITTING AND LAYOUT

JOIN AND INSTALL PIPING IN STRICT ACCORDANCE WITH MANU–FACTURER'S INSTALLATION GUIDE. INSTALL LINES AWAY FROM FIXED IMPROVEMENTS AND ALONG EDGE OF PLANTING AREAS.

7. EQUIPMENT AND INSTALLATION

SET ALL EQUIPMENT TRUE, PLUMB, SECURE, AND ACCESSIBLE FOR OPERATION AND SERVICING PER MANUFACTURER'S RECOMMENDATIONS AND PER DETAILS SHOWN.

8. BACKFILLING

MATERIAL: SUITABLE FILL SOIL FREE OF LARGE ROCKS AND CLODS.

BACKFILL: TRENCHES SHALL BE COMPACTED TO AT LEAST 85% OF THE MAX. RELATIVE DENSITY AS DETERMINED BY THE ASTM D–1557 EXCEPT BACKFILL IN TRENCHES LOCATED UNDER A.C. PAVED AREAS AND/OR ANY TRAFFIC AREAS IN WHICH CASE TRENCHES SHALL BE COMPACTED TO 90%. BACKFILL SHALL BE SUBJECT TO TESTING BY THE SOILS ENGINEER.

SETTLING: PROPERLY WETTED AND TAMPED TO A FIRM FINISH GRADE WITH NO FUTURE SETTLING.

9. TESTING AND ADJUSTING

PRESSURE TEST: PRESSURE LINES AT 150 P.S.I. FOR 2 HOURS AND NON–PRESSURE LINES AT EXISTING STATIC LINE PRESSURE FOR 2 HOURS. LINES SHALL BE WATERTIGHT WITH NO LEAKAGE.

COVERAGE TEST: ADJUST AND POSITION EMITTERS EMITTERS FOR COMPLETE COVERAGE OF ALL PLANTING AREAS.

10. RECORD PRINTS

MAINTAIN A SET OF PRINTS DELINEATING AND DIMENSIONING LOCATIONS AND DEPTHS OF ALL PRESSURE PIPING, VALVES, AND GATE VALVES AS WORK IS COMPLETED. RECORD PRINTS SHALL REMAIN ON THE JOB SITE THROUGHOUT CONSTRUCTION. A LEGIBLE REDUCED LAMINATED SET SHALL BE PREPARED AND SUBMITTED TO THE OWNER PRIOR TO FINAL ACCEPTANCE.

HYDROSEEDING (N.I.C.)

1. INTENT
TO FURNISH ALL MATERIALS, EQUIPMENT, APPLIANCES, AND INSTALLATION OF HYDROSEEDING, COMPLETE IN PLACE.

ALL DIMENSIONS AND LOCATIONS SHOWN ARE DIAGRAM SITE CONDITIONS AND SHALL BE VERIFIED BEFORE INITIATING WORK.

2. MATERIALS

HYDROMULCH: SILVA FIBER. APPLY AT 1500 LBS./ACRE.

HYDROMULCH ADDITIVE: ECOLOGY CONTROLS M–BINDER. APPLIED AT A RATE OF 70 LBS./ACRE.

HYDROSEED FERTILIZER: BEST 6–20–20 OR BEST 15–15–15 OR APPROVED EQUAL APPLIED AT A RATE APPROPRIATE FOR PRODUCT.

SEED: SEED TYPE AND RATE PER PLAN
SEED SHALL BE A NEW CROP, OF PURITY AND GERMINATION RATE STANDARDS OF THE INDUSTRY, FRESH AND VIABLE, AND SHALL BEAR A GUARANTEED ANALYSIS.

EQUIPMENT: SHALL HAVE A BUILT IN AGITATION SYSTEM AND OPERATING CAPACITY SUFFICENT TO AGITATE, SUSPEND AND HOMOGENEOUSLY MIX A SLURRY CONTAINING NOT LESS THAN 20 KILOS (44 LBS.) OF ORGANIC MULCHING AMENDMENT PLUS FERTILIZER, CHEMICAL ADDITIVES AND SOLIDS FOR EACH 100 GALLONS OF WATER.

3. INSTALLATION

ALL AREAS TO BE HYDROSEEDED SHALL BE WATERED TO A DEPTH OF SIX INCHES (6") PRIOR TO HYDROSEEDING.

USE HYDRAULIC EQUIPMENT WITH BUILT–IN AGITATION SYSTEM STANDARD TO THE INDUSTRY.

USING HYDROMULCH PULP AS A GUIDE, SPRAY THE SOIL WITH A UNIFORM VISIBLE COAT OF SLURRY UNTIL A COMPLETE EVEN COVERAGE OF THE AREA IS ACHIEVED.

SOIL PREPARATION AND PLANTING

1. ALL PLANTING LOCATIONS SHOWN AND MEASUREMENTS SCALED FROM THE DRAWINGS ARE APPROXIMATE. FINAL LOCATIONS TO BE APPROVED BY THE LANDSCAPE ARCHITECT.

2. ALL PLANT MATERIALS SHALL BE PROTECTED FROM EXCESSIVE WIND, SUN, AND ALL OTHER DAMAGE.

3. MATERIALS:

TOPSOIL: APPROVED CLEAN SANDY LOAM AND/OR LOAM SOIL, OR APPROVED EQUAL.

SOIL CONDITIONER

NITROLIZED SHAVINGS, TERRA BLEND OR APPROVED EQUAL.

GYPSUM: BEN FRANKLIN AGRICULTURAL GYPSUM, OR EQUAL.

PRE–PLANT FERTILIZER: COMMERCIAL (6–20–20) OR EQUAL.

POST–PLANT FERTILIZER: COMMERCIAL (16–8–8) OR EQUAL.

PLANTING TABLETS: AGRIFORM (20–10–5) BLUE CHIP TABLETS.

PLANTING BACKFILL: TWO (2) PARTS EXCAVATED SOIL BLENDED WITH ONE (1) PART SOIL CONDITIONER.

MULCH: SHREDDED, CLEAN GROUND FIR OR PINE WOOD MULCH.

TREE STAKES: TWO INCH (2") BY TEN FOOT (10') LONG SOUND LODGE POLE PINE STAKES, POINTED ONE END ONLY.

TREE TIES: BLACK VINYL CINCH–TIES BY BORDEN OR EQUAL.

TREE GUYS: 12 GAUGE GALVANIZED STRANDED WIRE PER DETAIL.

WOOD HEADERS: CONSTRUCTION ALL–HEART REDWOOD, FREE OF KNOTS ON TOP EDGE.

PLANT MATERIALS: PER THE CALIFORNIA STATE DEPARTMENT OF AGRICULTURE'S REGULATIONS FOR NURSERY INSPECTIONS OF RULES AND GRADING. PLANTS SHALL BE SOUND AND HEALTHY, FREE OF DISEASE AND DEFECTS, WELL DEVELOPED OF SIZE NORMAL FOR CONTAINER SIZE AND NOT ROOT–BOUND. UNSATISFACTORY AND UNDER–SIZED PLANTS WILL BE REJECTED. PROTECT PLANTS AT ALL TIMES ACCORDING TO SPECIES.

SEEDS: PURE, LIVE SEED OF VARIETIES SPECIFIED, FREE OF WEED SEED; GERMINATION AS SPECIFIED.

4. SOIL PREPARATION AND GRADING

ROUGH GRADES AND ROCK PLACEMENT: ESTABLISHED BY OTHER SECTIONS.

SOIL CONDITIONING: THOROUGHLY INCORPORATE THE FOLLOWING INTO THE PLANT BACKFILL MIX TYPICAL.
SOIL CONDITIONER – PER SOIL TEST
PRE–PLANT FERTILIZER – PER SOIL TEST
GYPSUM–PER SOIL TEST
WETTING AGENT – PER SOIL TEST

DEEP WATERING: DEEP WATERING LEACH ALL PLANTING AREAS TO EIGHT (8) INCHES MINIMUM DEPTH.

FINAL GRADING: ENSURE POSITIVE DRAINAGE OF PROJECT AREA WITH ALL AREAS LEFT SMOOTH AND EVEN AND FREE OF ROCKS, CLODS AND DEBRIS. FINISH GRADE SHALL BE ONE INCH (1") BELOW ADJACENT FLATWORK AND CURBS EXCEPT LAWNS SHALL BE FLUSH.

5. PLANTING INSTALLATION

LAYOUT: PER PLANS WITH FINAL REVIEW AND APPROVAL OF LOCATIONS BY LANDSCAPE ARCHITECT.

EXCAVATION: PLANTING HOLES SHALL BE AS SHOWN ON DETAILS.

PLANTING TABLETS: SET THREE INCHES (3") BELOW GRADE:

1–5 GRAM PER FLAT PLANT AND/OR CUTTING
1–21 GRAM PER 1 GALLON
3–21 GRAM PER 5 GALLON
5–21 GRAM PER 15 GALLON
1–21 GRAM PER EACH 2 INCH BOX SIZE

SETTING: SET PLANTS SLIGHTLY HIGHER THAN FINISH GRADE AND THOROUGHLY WATER IN.

STAKING AND GUYING: TO INSURE SAFETY AND PROPER HEALTH OF TREE. TIE WITH TIES PER DETAILS.

WATER BASINS: AS REQUIRED TO ADEQUATELY WATER TREES AND SHRUBS.

LEVELING: ALL PLANTING AREAS SHALL BE LEFT SMOOTH AND EVEN.

6. MAINTENANCE

PLANT MAINTENANCE WORK SHALL CONSIST OF APPLYING WATER (EXCEPT INITIAL WATERING OF PLANTS) WEEDING, CARING FOR PLANTS, AND PERFORMING THE FOLLOWING FINAL PLANT ESTABLISHMENT WORK:

THE ENTIRE PROJECT TO BE MAINTAINED FOR A PERIOD OF (60) CALENDAR DAYS, COMMENCING FROM THE TIME ALL ITEMS OF WORK HAVE BEEN COMPLETED TO THE SATISFACTION OF THE LANDSCAPE ARCHITECT.
THE ENTIRE PROJECT SHALL BE CARED FOR SO THAT A NEAT AND DURING THE FINAL (60) CALENDAR DAY PERIOD ALL PLANTS AND PLANTED AREAS SHALL BE KEPT WELL WATERED AND WEED FREE AT ALL TIMES. WEEDS, DALLAS, JOHNSON, AND BERMUDA GRASS SHALL BE REMOVED.

CLEAN CONDITION WILL BE PRESENTED AT ALL TIMES, TO THE SATISFACTION OF THE LANDSCAPE ARCHITECT.

CONTRACTOR SHALL MAINTAIN A SUFFICIENT NUMBER OF MEN AND WORKMEN SHALL NOT BE ALLOWED TO WALK ON SHRUB AREAS UNNECESSARILY BEFORE, DURING OR AFTER PLANTING. DAMAGED OR COMPACTED SHRUB AREAS SHALL BE RE–PLANTED AT THE CONTRACTOR'S EXPENSE.

IN ORDER TO EXPEDITE THE PLANT ESTABLISHMENT WORK, ADEQUATE EQUIPMENT TO PERFORM THE WORK HEREIN SPECIFIED AND FROM THE TIME ANY PLANTING IS DONE UNTIL THE END OF THE FINAL (60) CALENDAR DAY PERIOD.

THE CONTRACTOR MAY BE RELIEVED FROM MAINTENANCE WORK WHEN THE FINAL (60) CALENDAR DAY MAINTENANCE WORK HAS BEEN SATISFACTORILY COMPLETED TO THE SATISFACTION OF THE LANDSCAPE ARCHITECT.

DAMAGE TO PLANTING AREAS SHALL BE REPLACED IMMEDIATELY.

(1) DEPRESSIONS CAUSED BY VEHICLES, BICYCLES, OR FOOT

7. GUARANTEE AND REPLACEMENTS

ALL SHRUBS AND GROUNDCOVER SHALL BE GUARANTEED BY THE CONTRACTOR AS TO GROWTH AND HEALTH FOR A PERIOD OF SIX MONTHS AFTER COMPLETION OF THE SPECIFIED MAINTENANCE PERIOD AND/OR FINAL ACCEPTANCE BY THE LANDSCAPE ARCHITECT. ALL TREES UP TO 5 GALLON SIZE SHALL BE GUARANTEED BY THE CONTRACTOR TO LIVE AND GROW IN AN ACCEPTABLE UPRIGHT POSITION FOR A PERIOD OF SIX MONTHS AFTER COMPLETION OF THE SPECIFIED MAINTENANCE PERIOD AND/OR FINAL ACCEPTANCE BY THE LANDSCAPE ARCHITECT. TREES IN 15 GALLON, OR LARGER, AND ALL FIELD GROWN SPECIMENS SHALL BE GUARANTEED BY THE CONTRACTOR TO LIVE AND GROW IN AN ACCEPTABLE UPRIGHT POSITION FOR A PERIOD OF ONE YEAR AFTER COMPLETION OF THE SPECIFIED MAINTENANCE PERIOD, AND/OR FINAL ACCEPTANCE BY THE LANDSCAPE ARCHITECT.

8. CLEAN–UP

UPON COMPLETION OF WORK OF THIS SECTION, REMOVE RUBBISH, TRASH AND DEBRIS RESULTING FROM OPERATION. REMOVE DISUSED EQUIPMENT AND IMPLEMENTS OF SERVICE, AND LEAVE ENTIRE AREA INVOLVED IN A NEAT AND ACCEPTABLE CONDITION SUCH AS TO MEET THE APPROVAL OF THE LANDSCAPE ARCHITECT, WITH ALL PAVING, WALKS AND OTHER CONSTRUCTION WASHED–DOWN AND FREE OF ALL DIRT AND DEBRIS.

SPECIAL CONDITIONS

ALL PROVISIONS OF THE GENERAL CONDITIONS OF THE CONTRACT SHALL APPLY TO THE WORK AS IF HEREIN WRITTEN.

1. ALL EXISTING UTILITY LINES AND IMPROVEMENTS SHALL BE LOCATED PRIOR TO WORK.

2. CONTRACTOR SHALL SECURE AND PAY FOR ALL REQUIRED PERMITS AND FEES TO COMPLETE WORK.

3. CONTRACTOR SHALL BE INSURED FOR LIABILITY AND PROPERTY DAMAGE.

4. CONTRACTOR SHALL ADEQUATELY PROTECT ALL EXISTING PROPERTY.

5. CONTRACTOR SHALL GUARANTEE ALL MATERIALS AND WORKMANSHIP FOR ONE YEAR. (EXCEPT AS NOTED)

6. ALL MATERIALS SHALL BE OF STANDARD, APPROVED, AND FIRST GRADE QUALITY AND SHALL BE IN PRIME CONDITION.

7. WORK SHALL BE PERFORMED WHEN WEATHER CONDITIONS PERMIT SATISFACTORY RESULTS.

8. ALL WORK SHALL BE DONE IN ACCORDANCE WITH APPROVED METHODS AND STANDARDS AS SET FORTH BY THE CALIFORNIA COUNCIL OF LANDSCAPE CONTRACTORS, UNLESS OTHERWISE INDICATED OR SHOWN.

9. ALL WORK SHALL BE IN FULL COMPLIANCE WITH ALL GOVERNING CODES AND REGULATIONS.

10. ALL AREAS SHALL BE LEFT CLEAN, FREE OF DEBRIS AND WASHED DOWN.

11. LANDSCAPE ARCHITECT RETAINS OPTION TO REQUIRE THAT CONTRACTOR RECEIVE A FIELD OBSERVATION OF EACH OPERATION AND MATERIAL PRIOR TO INCORPORATION INTO THE WORK.

PLANTED AREAS FROM FOOT TRAFFIC INCLUDING BUT NOT LIMITED TO STAKES & WARNING TAPE.

SCALE:
1"=20'-0"

NOT FOR BID

STK
42095 ZEVO DR., TEMECULA, CALIFORNIA 92590-3780
Phone: 951.296.9110 Fax: 951.296.6079 Email: stk@stkinc.com

CONSULTANT:

ALHAMBRA GROUP
LANDSCAPE ARCHITECTURE
CALIFORNIA LICENSE #2017
RECREATION FACILITIES PLANNING
41635 ENTERPRISE CIRCLE NORTH, SUITE C
TEMECULA, CA 92590 (951) 296-6802

PROJECT ADMINISTERED BY:
SAN BERNARDINO COUNTY REAL ESTATE SERVICES DEPARTMENT - PROJECT MANAGEMENT DIVISION

385 N. ARROWHEAD AVE.
SAN BERNARDINO, CA 92415

PROJECT NAME:
SAN BERNARDINO COUNTY FIRE DEPARTMENT:
FIRE STATION 226

PROJECT # 10.10.1032
CIP # _____
CAFM # _____

1920 DEL ROSA AVE N.
SAN BERNARDINO,
CA 92404

ISSUE INFORMATION:

DATE:	INFORMATION:
04–11–2022	20% CD SET
04–28–2022	50% CD SET
06–15–2022	95% CD SET
09–16–2022	95%CD SET–3rd Ba
10–03–2022	PLAN CHECK

SHEET INFORMATION:
STK PROJECT NO.: 374–154–21
SCALE: AS NOTED
DATE: SEPTEMBER 2022
PLOT DATE: –
DRAWING NAME:

SEAL:
REGISTERED LANDSCAPE ARCHITECT
VINCENT DI DONATO
10-03-22
9-30-23
STATE OF CALIFORNIA

SHEET TITLE:
PLANTING PLAN

SHEET NO.:
L-3
OF 3

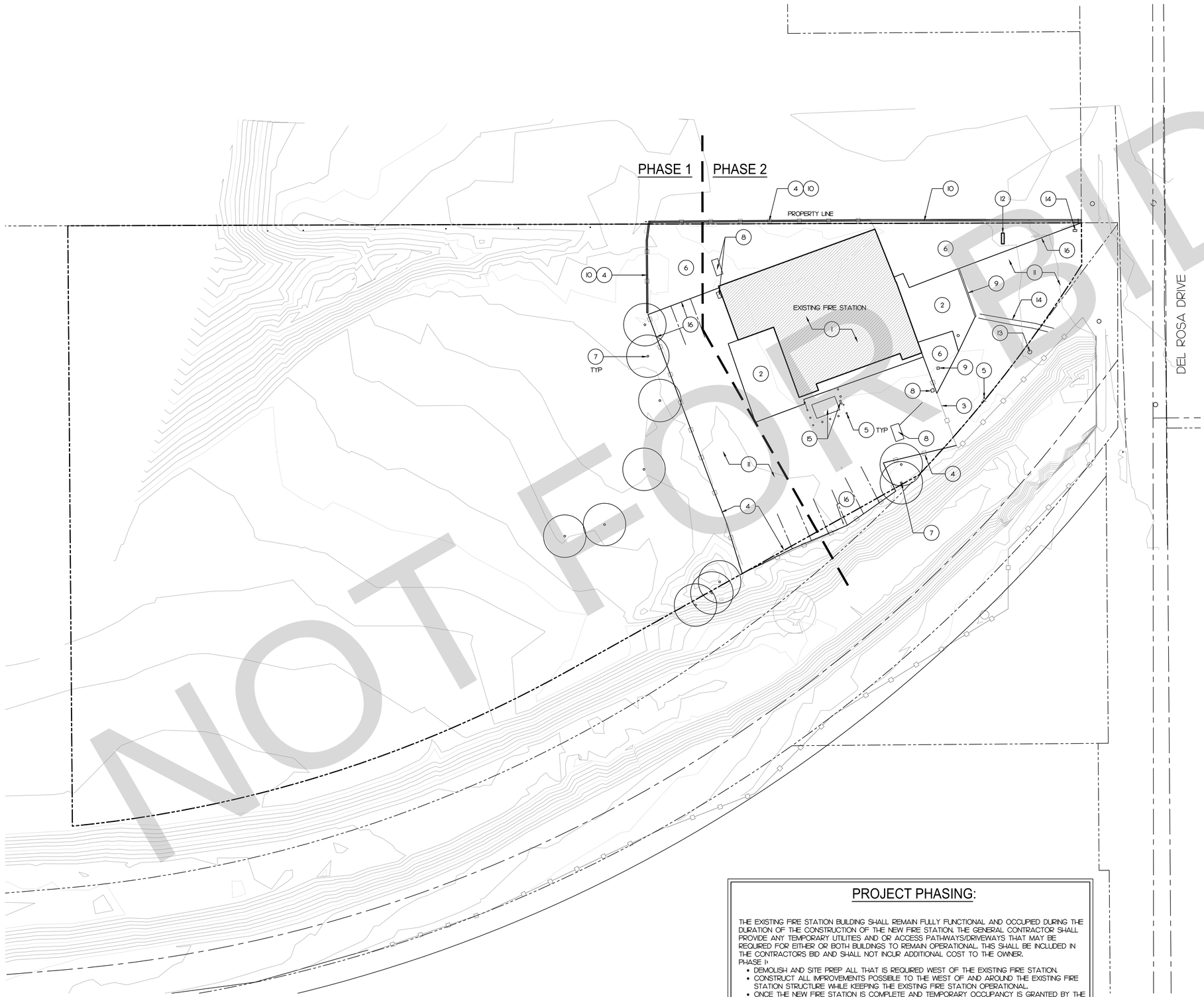

PROJECT PHASING:

THE EXISTING FIRE STATION BUILDING SHALL REMAIN FULLY FUNCTIONAL AND OCCUPIED DURING THE DURATION OF THE CONSTRUCTION OF THE NEW FIRE STATION. THE GENERAL CONTRACTOR SHALL PROVIDE ANY TEMPORARY UTILITIES AND OR ACCESS PATHWAYS/DRIVEWAYS THAT MAY BE REQUIRED FOR EITHER OR BOTH BUILDINGS TO REMAIN OPERATIONAL. THIS SHALL BE INCLUDED IN THE CONTRACTORS BID AND SHALL NOT INCUR ADDITIONAL COST TO THE OWNER.

PHASE I:

- DEMOLISH AND SITE PREP ALL THAT IS REQUIRED WEST OF THE EXISTING FIRE STATION.
- CONSTRUCT ALL IMPROVEMENTS POSSIBLE TO THE WEST OF AND AROUND THE EXISTING FIRE STATION STRUCTURE WHILE KEEPING THE EXISTING FIRE STATION OPERATIONAL.
- ONCE THE NEW FIRE STATION IS COMPLETE AND TEMPORARY OCCUPANCY IS GRANTED BY THE BUILDING OFFICIAL THE OCCUPANTS OF THE EXISTING FIRE STATION MAY MOVE INTO THE NEW FIRE STATION.

PHASE II:

- DEMOLISH THE EXISTING / OLD FIRE STATION AND ALL THE OLD IMPROVEMENTS EAST OF THE NEW FIRE STATION.
- CONSTRUCT THE BALANCE OF IMPROVEMENTS REQUIRED EAST OF THE NEW FIRE STATION.

GENERAL CONTRACTOR SHALL SUBMIT WRITTEN PLANS AND SCHEDULE THAT ADDRESSES ALL OF THE ABOVE IN MORE DETAIL PRIOR TO BEGINNING AND ON SITE CONSTRUCTION WORK.

KEY NOTE

1. DEMOLISH EXISTING WOOD FRAME BUILDING AND ASSOCIATED COMPONENTS, FOUNDATIONS, AND UTILITES.
2. DEMOLISH EXISTING PCC PAVEMENT AND BASE.
3. DEMOLISH EXISTING FENCE, GATE , GATE MOTOR, FENCE POSTS, AND FOOTINGS. PROTECT KEYPAD AND HAND-OVER TO OWNER.
4. DEMOLISH EXISTING CHAINLINK FENCE WITH BARBED WIRE INSIDE PROPERTY LINE, FENCE POSTS, AND FOOTINGS.
5. DEMOLISH EXISTING BOLLARD & FOOTING.
6. DEMOLISH EXISTING LANDSCAPE AREA & IRRIGATION.
7. DEMOLISH EXISTING TREE & IRRIGATION.
8. REMOVE EXISTING ELECTRICAL UTILITY AND ASSOCIATED COMPONENTS.
9. REMOVE EXISTING WATER UTILITY AND ASSOCIATED COMPONENTS.
10. DEMOLISH EXISTING RETAINING WALL AND FOOTINGS.
11. DEMOLISH EXISTING ASPHALT CONRETE PAVEMENT AND BASE.
12. KEEP EXISTING FIRE STATION SIGN INCLUDING FOOTINGS, ETC. FOR RE-USE.
13. REMOVE EXISTING LIGHT POST INCLUDING FOOTINGS, AND ASSOCIATED COMPONENTS.
14. REMOVE EXISTING UNDERGROUND UTILITY AND ASSOCIATED COMPONENTS.
15. RELOCATE EXISTING FUEL DISPENSING TANK AND ASSOCIATED COMPONENTS.
16. REMOVE EXISTING CURB.

STK
42095 ZEVO DR., TEMECULA, CALIFORNIA 92590-3780
Phone: 951.296.9110 Fax: 951.296.6079 Email: stk@stkinc.com

CONSULTANT:

PROJECT ADMINISTERED BY:
SAN BERNARDINO COUNTY
PROJECT & FACILITIES
MANAGEMENT DEPARTMENT

385 N. ARROWHEAD AVE.
SAN BERNARDINO, CA 92415

PROJECT NAME:

SAN BERNARDINO
COUNTY FIRE
DEPARTMENT:

FIRE STATION 226

PROJECT # 10.0.0.032

CIP #21-037

CAFM # SAB198

APN # 0273-011-22

1920 DEL ROSA AVE N.
SAN BERNARDINO,
CA 92404

ISSUE INFORMATION:

DATE:	INFORMATION:
04-11-2022	20% CD SET
04-28-2022	50% CD SET
06-15-2022	95% CD SET
09-16-2022	95% CD- 3rd BAY
10-03-2022	PLAN CHECK

SHEET INFORMATION:

STK PROJECT NO.: 374-154-21
SCALE: AS NOTED
DATE: JANUARY 2021
PLOT DATE: –
DRAWING NAME:

SEAL:

LICENSED ARCHITECT
ANTONIO FINALI
No. C31476
REN. 07-31-23
STATE OF CALIFORNIA

SHEET TITLE:

DEMOLITION
PLAN

SHEET NO.:

A1.0

DEMOLITION PLAN

SCALE: 1"=20'-0"

1

J:\374-SAN#NO\374-154-21 SBC Fire Station No. 226\Architectural\A1.0 - DEMO PLAN.dwg
00/00/2022 4:37PM

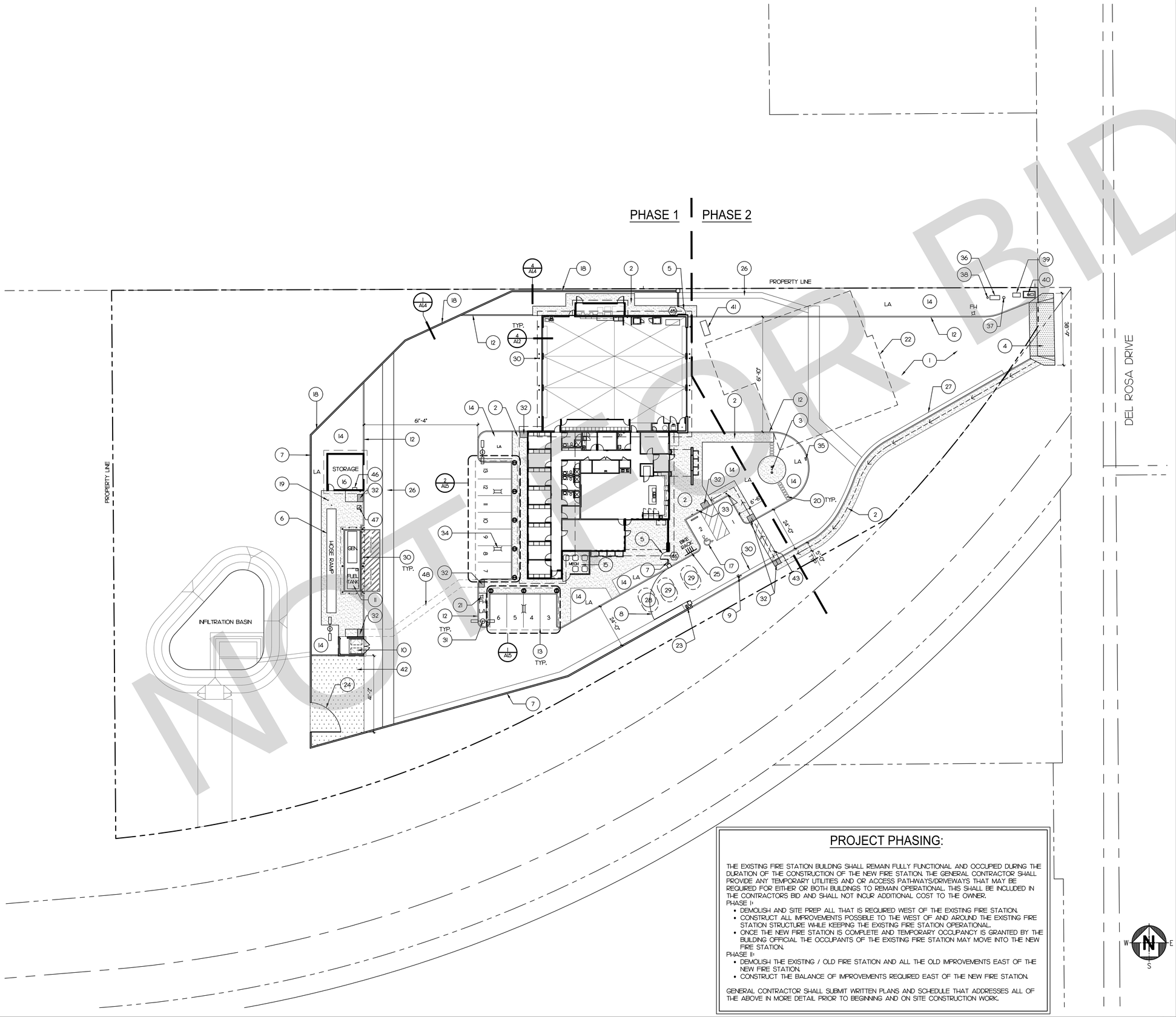

PROJECT PHASING:

THE EXISTING FIRE STATION BUILDING SHALL REMAIN FULLY FUNCTIONAL AND OCCUPIED DURING THE DURATION OF THE CONSTRUCTION OF THE NEW FIRE STATION. THE GENERAL CONTRACTOR SHALL PROVIDE ANY TEMPORARY UTILITIES AND OR ACCESS PATHWAYS/DRIVEWAYS THAT MAY BE REQUIRED FOR EITHER OR BOTH BUILDINGS TO REMAIN OPERATIONAL. THIS SHALL BE INCLUDED IN THE CONTRACTORS BID AND SHALL NOT INCUR ADDITIONAL COST TO THE OWNER.

PHASE I:
- DEMOLISH AND SITE PREP ALL THAT IS REQUIRED WEST OF THE EXISTING FIRE STATION.
- CONSTRUCT ALL IMPROVEMENTS POSSIBLE TO THE WEST OF AND AROUND THE EXISTING FIRE STATION STRUCTURE WHILE KEEPING THE EXISTING FIRE STATION OPERATIONAL.
- ONCE THE NEW FIRE STATION IS COMPLETE AND TEMPORARY OCCUPANCY IS GRANTED BY THE BUILDING OFFICIAL THE OCCUPANTS OF THE EXISTING FIRE STATION MAY MOVE INTO THE NEW FIRE STATION.

PHASE II:
- DEMOLISH THE EXISTING / OLD FIRE STATION AND ALL THE OLD IMPROVEMENTS EAST OF THE NEW FIRE STATION.
- CONSTRUCT THE BALANCE OF IMPROVEMENTS REQUIRED EAST OF THE NEW FIRE STATION.

GENERAL CONTRACTOR SHALL SUBMIT WRITTEN PLANS AND SCHEDULE THAT ADDRESSES ALL OF THE ABOVE IN MORE DETAIL PRIOR TO BEGINNING AND ON SITE CONSTRUCTION WORK.

SITE PLAN

SCALE: 1"=20'-0" | 1

KEY NOTE

1. 9" CONCRETE PAVING (4,500 PSI) W/ #4'S AT 24" O.C. EACH WAY AT MID-SLAB OVER 6" CLASS 2 BASE. PROVIDE SAWCUT CONTROL JOINTS (C.J) AT 10'-0" O.C. & EXPANSION JOINTS (E.J) AT 60' O.C. SEE 4/A12
   PROVIDE PLAN OF PROPOSED LOCATIONS OF EXPANSION JOINTS AND CONTROL JOINTS FOR APPROVAL PRIOR PLACING CONCRETE.
2. CONCRETE SIDEWALK W/ EXPANSION JOINTS AT 15'-0" O.C. & CONTROL JOINTS AT 5'-0" O.C. (TYP.)
3. FLAGPOLE WITH UPLIGHTS. SEE 5/A12
4. 12" CONCRETE PAVING (4,500 PSI) W/4'S AT 18" O.C. EACH WAY AT MID-SLAB OVER 6" CLASS 2 BASE. PROVIDE CONTROL JOINTS (C.J) AT 10'-0" O.C. AND EXPANSION JOINTS (E.J) AT 20'-0" O.C. SEE 4/A12
5. PERSONNEL GATE- TYP OF 2. PROVIDE LEVEL LANDING OF 60"x60" AND 24" CLEAR AT GATE STRIKE SIDE (PULL SIDE). SEE 7/A12
6. HOSE DRYING RAMP. SEE 1/A12
7. 6' HIGH CMU WALL TOPPED WITH ANTI-CLIMB CURVED FENCE PANELS. SEE 8/A12
8. MOTORIZED SWINGING GATE. SEE 9/A13
9. MOTORIZED GATE KEYPAD ON PEDESTAL & PIPE BOLLARD AT 30" AWAY FROM FACE OF GATE. MOUNT KEYPAD AT +40". FIELD VERIFY.
10. TRASH ENCLOSURE. SEE 1/A13
11. ABOVE GROUND FUEL TANK & GENERATOR, CONCRETE CONTAINMENT POND & CANOPY. SEE 9/A12
12. CONCRETE CURB OR CONCRETE CURB & GUTTER.
13. PARKING LOT STRIPING.
14. LANDSCAPE.
15. MECHANICAL EQUIPMENT ENCLOSURE. SEE 2/A13
16. STORAGE BUILDING. SEE 4/A13
17. ACCESSIBLE PARKING SPACE. SEE 3/A13
18. RETAINING WALL WITH CMU FENCE & ANTI-CLIMB. SEE 1/A14 4/A14
19. HOSE BIBB AT ±40" HIGH MECHANICALLY ANCHORED TO 4" SQ. PIPE CONC. FILLED. (PAINT - OSHA YELLOW)
20. 12x24 CONCRETE STEPPING PADS. SPACED AT 6'. TYP. OF 12.
21. FIRE HYDRANT (TYP. OF 2).
22. EXISTING BUILDING. TO DEMOLISHED.
23. GATE MOTOR ON 4" THICK CONCRETE PAD.
24. MANUAL SWINGING GATE. SEE 8/A13
25. BIKE RACK WITH CONC. PAD - INSTALL PER MANUF.'S RECOMMENDATIONS.
26. CROSS GUTTER. SEE CIVIL DWGS.
27. ROLLED CURB. SEE CIVIL DWGS.
28. MOTORIZED GATE EXIT LOOP.
29. MOTORIZED GATE SAFETY LOOPS (TYP. OF 2).
30. 6" DIA. PIPE BOLLARD. SEE 7/A12
31. LIGHT POLE, (TYP. OF 3). SEE ELECTRICAL.
32. DETECTABLE WARNING SURFACE.
33. BOLLARD LIGHT FIXTURE, (TYP. OF 2) SEE ELECTRICAL.
34. CAR CANOPY LIGHTING. SEE ELECTRICAL.
35. MAIL BOX
36. DOUBLE DETECTOR CHECK ASSEMBLY. SEE CIVIL DWGS.
37. P.I.V.
38. FDC
39. REDUCED PRESSURE PRINCIPAL BACKFLOW ASSEMBLY (RPP). SEE CIVIL DWGS.
40. WATER METER. SEE CIVIL DWGS.
41. CLARIFIER. SEE PLUMBING.
42. COMPACTED GRAVEL.
43. ACCESSIBLE PATH STRIPPING.
44. EMERGENY SHUT-OFF FOR ABOVE FUEL TANK. SEE 7/A13
45. PATH OF ACCESS.
46. IRRIGATION CONTROLLER. SEE LANDSCAPE DWGS.
47. IRRIGATION SOLAR SYNC WEATHER STATION. SEE LANDSCAPE DWGS.
48. UNMARKED ADA PATH.

STK
42095 ZEVO DR., TEMECULA, CALIFORNIA 92590-3780
Phone: 951.296.9110 Fax: 951.296.6079 Email: stk@stkinc.com

CONSULTANT:

PROJECT ADMINISTERED BY:
SAN BERNARDINO COUNTY
PROJECT & FACILITIES
MANAGEMENT DEPARTMENT

385 N. ARROWHEAD AVE.
SAN BERNARDINO, CA 92415

PROJECT NAME:
SAN BERNARDINO
COUNTY FIRE
DEPARTMENT:
FIRE STATION 226

PROJECT # 10.010.032
CIP #21-037
CAFM # SAB198
APN # 0273-011-22

1920 DEL ROSA AVE N.
SAN BERNARDINO,
CA 92404

ISSUE INFORMATION:

DATE:	INFORMATION:
04-11-2022	20% CD SET
04-28-2022	50% CD SET
06-15-2022	95% CD SET
09-16-2022	95% CD- 3rd BAY
10-03-2022	PLAN CHECK

SHEET INFORMATION:
STK PROJECT NO.: 374-154-21
SCALE: AS NOTED
DATE: JANUARY 2021
PLOT DATE: –
DRAWING NAME:

SEAL:
LICENSED ARCHITECT ANTONIO FINAZZI No. C31476 REN. 07-31-23 STATE OF CALIFORNIA

SHEET TITLE:
SITE PLAN

SHEET NO.:
A1.1

J:\374-SAN#NRD\374-154-13 SBC Fire Station No. 226\Architecture\A1.1 - SITE PLAN.dwg
09/30/2022 5:07PM

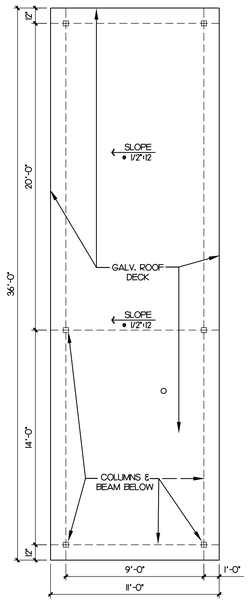

ROOF PLAN
SCALE: 1/4"=1'-0"

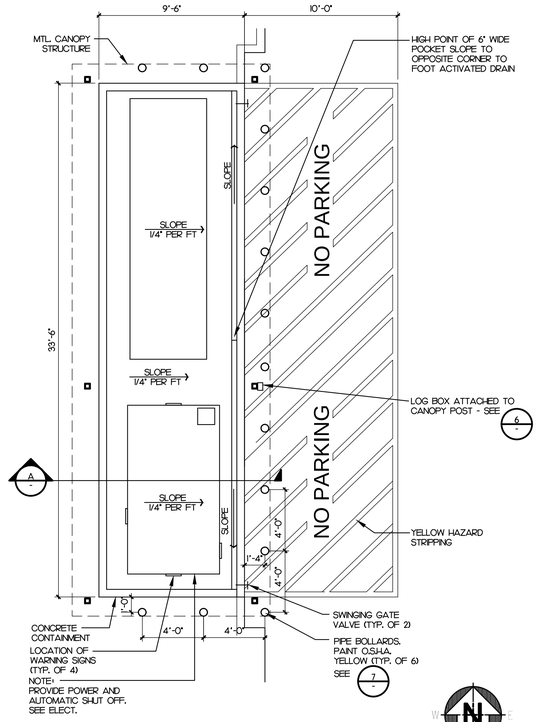

FLOOR PLAN
SCALE: 1/4"=1'-0"

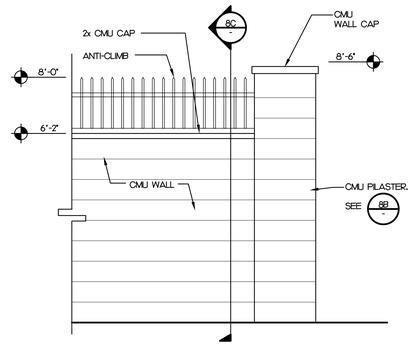

8A CMU WALL ELEVATION
SCALE: 1/2"=1'-0"

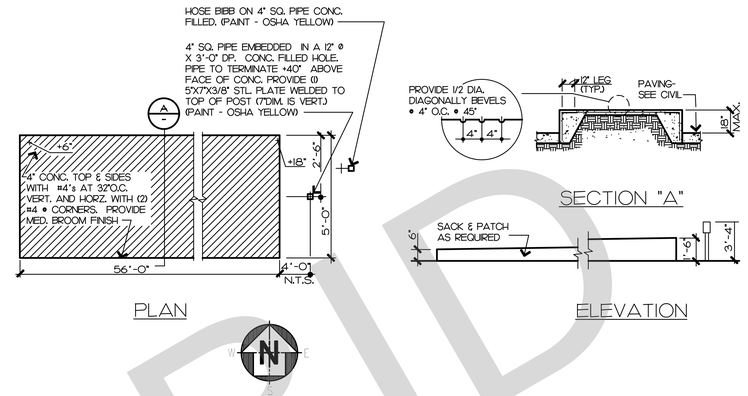

PLAN

ELEVATION

HOSE DRYING RAMP

SCALE: 1/4"=1'-0" (1)

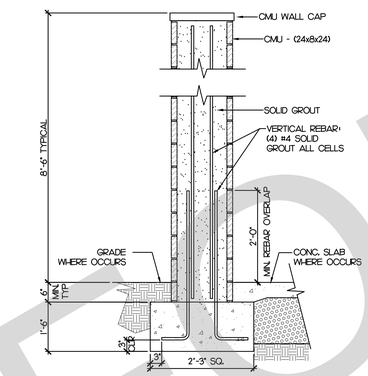

8B CMU PILASTER
SCALE: 3/4"=1'-0"

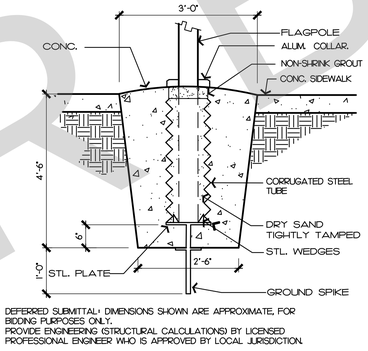

DEFERRED SUBMITTAL: DIMENSIONS SHOWN ARE APPROXIMATE, FOR BIDDING PURPOSES ONLY.
PROVIDE ENGINEERING (STRUCTURAL CALCULATIONS) BY LICENSED PROFESSIONAL ENGINEER WHO IS APPROVED BY LOCAL JURISDICTION.

FLAG POLE FTG.

SCALE: 3/4"=1'-0" (5)

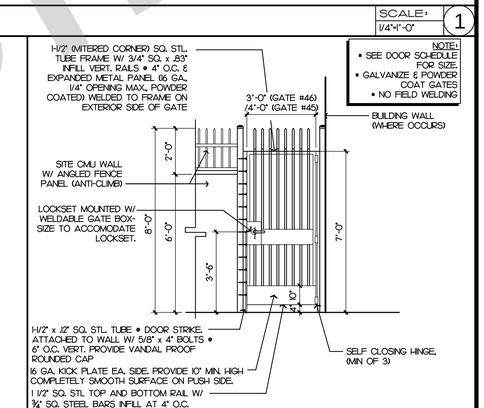

PERSONNEL GATE

SCALE: 3/8"=1'-0" (2)

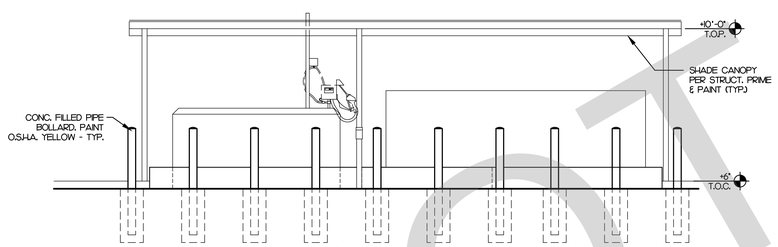

FRONT ELEVATION
SCALE: 1/4"=1'-0"

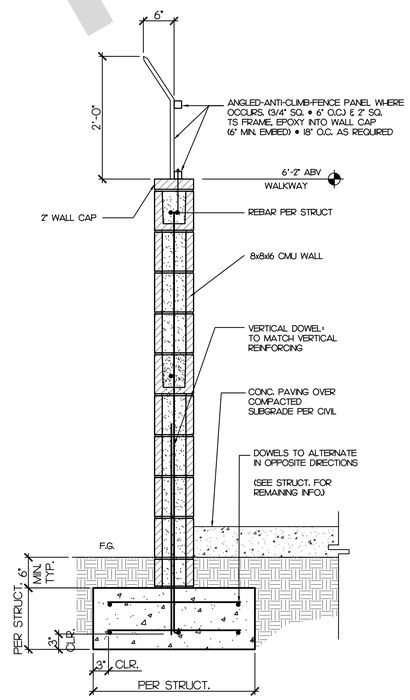

8C CMU WALL SECTION
SCALE: 1"=1'-0"

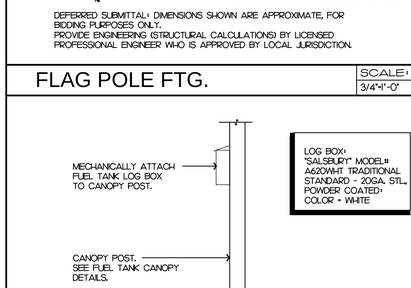

FUEL LOG BOX

SCALE: 1/4"=1'-0" (6)

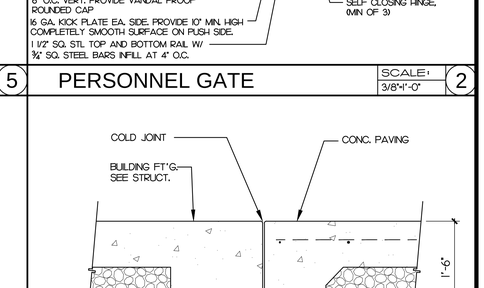

CONC. COLD JOINT

SCALE: 1"=1'-0" (3)

PROVIDE THE INFORMATION ON (2) SIGNS TO BE POSTED (1-GENERATOR & 1-ABOVE GROUND FUEL TANK) AT THE DISPENSER (LETTERS SHALL NOT BE LESS THAN 2" IN HEIGHT X 3/8" STROKE):
A. No Smoking
B. Shut off motor
C. Discharge your static electricity before fueling by touching a metal surface away from the nozzle.
D. To prevent static charge, do not re-enter your vehicle while gasoline is pumping. If a fire starts, do not remove nozzle - back away immediately.
E. It is unlawful and dangerous to dispense gasoline into unapproved containers.
F. No filling of portable containers in or on a motor vehicle. Place container on ground before filling.

SEE ENLARGED PLAN FOR LOCATIONS.

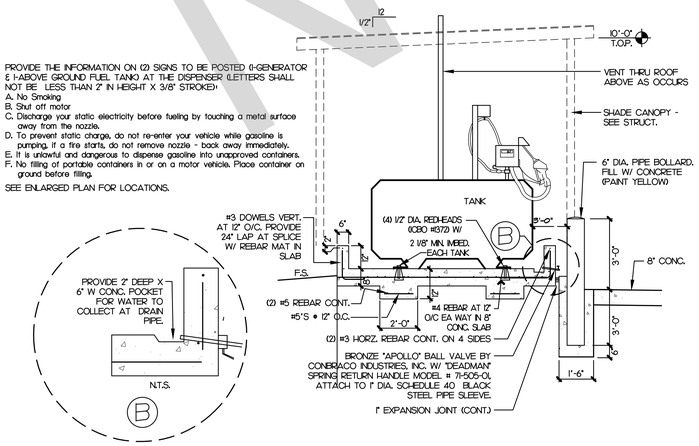

SECTION A
SCALE: 3/8"=1'-0"

ENLARGED FUEL TANK / GENERATOR

SCALE: 1/4"=1'-0" (9)

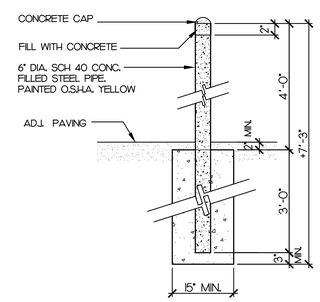

BOLLARD

SCALE: 3/4"=1'-0" (7)

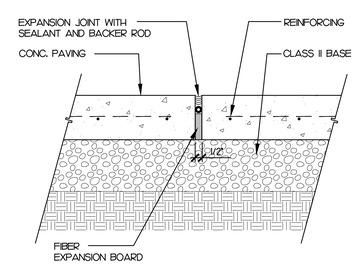

CONC. EXPANSION JOINT

SCALE: 1"=1'-0" (4)

CMU WALL DETAILS

SCALE: AS SHOWN (8)

NOT FOR BID

STK
42095 ZEVO DR., TEMECULA, CALIFORNIA 92590-3780
Phone: 951.296.9110 Fax: 951.296.6079 Email: stk@stkinc.com

CONSULTANT:

PROJECT ADMINISTERED BY:
SAN BERNARDINO COUNTY
PROJECT & FACILITIES
MANAGEMENT DEPARTMENT

385 N. ARROWHEAD AVE.
SAN BERNARDINO, CA 92415

PROJECT NAME:
SAN BERNARDINO COUNTY FIRE DEPARTMENT:
FIRE STATION 226

PROJECT # 10.010.032
CIP #21-037
CAFM # SAB198
APN # 0273-011-22

1920 DEL ROSA AVE N.
SAN BERNARDINO,
CA 92404

ISSUE INFORMATION:

DATE:	INFORMATION:
04-11-2022	20% CD SET
04-28-2022	50% CD SET
06-15-2022	95% CD SET
09-16-2022	95% CD- 3rd BAY
10-03-2022	PLAN CHECK

SHEET INFORMATION:
STK PROJECT NO.: 374-154-21
SCALE: AS NOTED
DATE: JANUARY 2021
PLOT DATE: –
DRAWING NAME:

SEAL:
LICENSED ARCHITECT ANTONIO FINUCCI No. C31476 REN. 07-31-23 STATE OF CALIFORNIA

SHEET TITLE:
SITE DETAILS

SHEET NO.:
A1.2

J:\374-SANBNRDO\374-154-21 SBC Fire Station No. 226\Architecture\A1.2-A1.3 & A1.4 - SITE DETAILS.dwg
09/20/2022 4:39PM

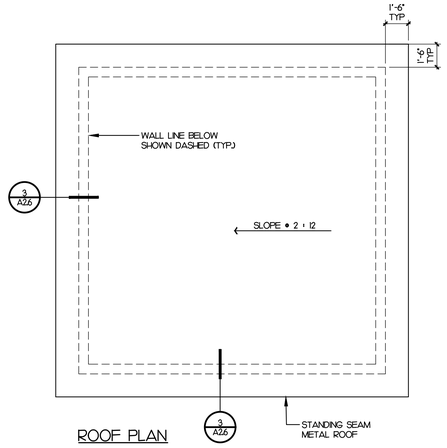

ROOF PLAN

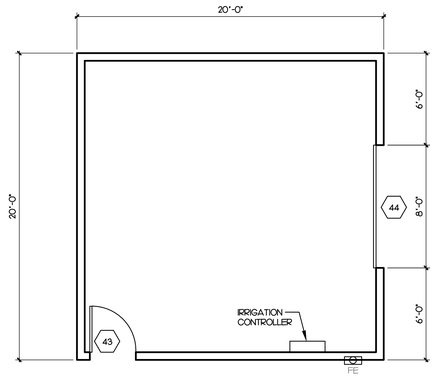

FLOOR PLAN

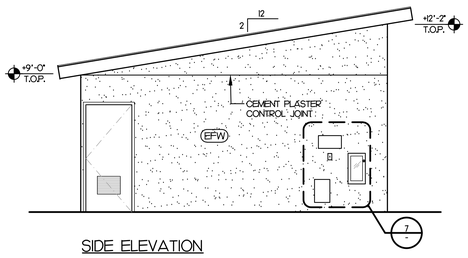

SIDE ELEVATION

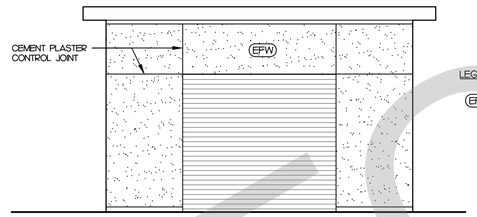

LEGEND:

EFW STUCCO WALL- FIELD OMEGA, COLORTREK, 432 MILKY QUARTZ, BASE 10

FRONT ELEVATION

STORAGE BUILDING — SCALE: 1/4"=1'-0" — 5

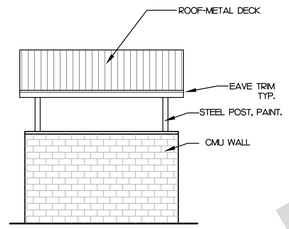

SOUTH ELEVATION

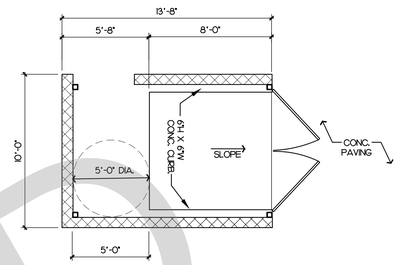

PLAN

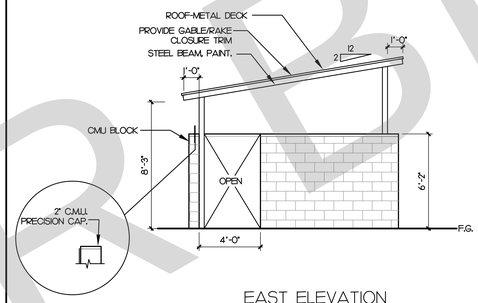

EAST ELEVATION

NOTES:

1. ROOF -METAL DECK, GALVANIZED FINISH. REFER TO STRUCTURAL
2. FRAMING MEMBERS ARE TO HAVE (2) COATS ZINC PRIMER AND (2) COATS SATIN FINISH PAINT.
3. CANOPY COVER ENGINEERING - REFER TO STRUCTURAL.

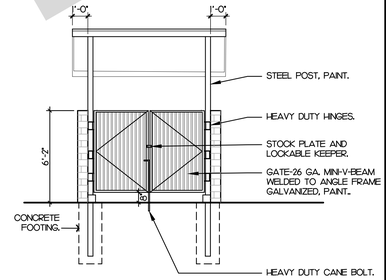

NORTH ELEVATION

TRASH ENCLOSURE — SCALE: 1/4"=1'-0" — 1

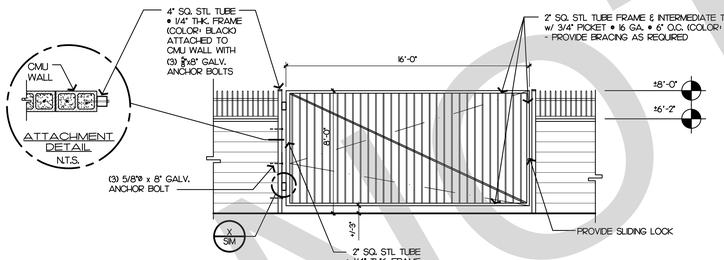

MANUAL SWINGING GATE — SCALE: 1/4"=1'-0" — 8

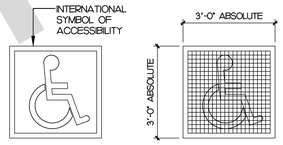

A) SYMBOL PROPORTIONS B) DISPLAY CONDITIONS

NOTES:

1. PAVEMENT SYMBOL SHALL BE PAINTED WHITE ON A BLUE BACKGROUND.
2. BLUE COLOR SHOULD MATCH COLOR # 15090 IN THE FEDERAL STANDARD 595a AS SPECIFIED IN SECTION 522b)2.

ADA SYMBOL — SCALE: 1/2"=1'-0" — 6

GENERAL H.C. PARKING NOTES:

1. PROVIDE ADEQUATE DRAINAGE.
2. SLOPE SHALL NOT EXCEED 2% IN ANY DIRECTION UNLESS THERE IS EQUIVALENT FACILITATION.
3. BLUE COLOR SHOULD MATCH COLOR # 15090 IN THE FEDERAL STANDARD 595a AS SPECIFIED IN SECTION 522b)2.
4. EACH PARKING STALL WILL REQUIRE A WHEEL STOP.

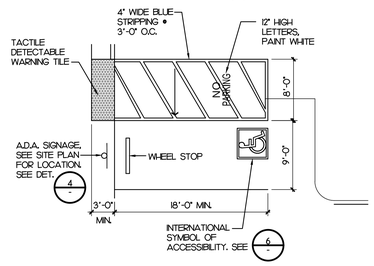

ADA PARKING — SCALE: 1/8"=1'-0" — 3

PLAN

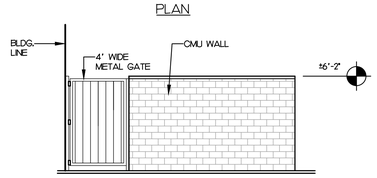

FRONT ELEVATION

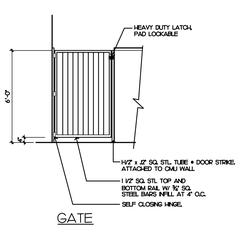

GATE

MECHANICAL ENCLOSURE — SCALE: 1/4"=1'-0" — 2

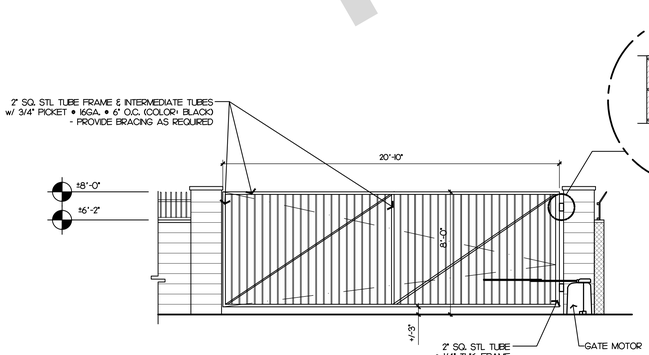

GATE NOTES:

- ELECTRIC OPERATED MOTOR W/ MOUSE PROOF ENCLOSURES. SEE SPECIFICATIONS.
- PROVIDE TWO SAFETY LOOPS "INSIDE & OUTSIDE" GATE (4'-0" ON EACH SIDE) SET IN CONCRETE. "DO NOT SAWCUT CONCRETE". PROVIDE EXIT LOOP = EXIT GATE.
- PROVIDE KEY PAD WITH VANDAL RESISTANT METAL BOX & KNOX RAPID ENTRY KEY SWITCH OVERRIDE (PER FIRE DEPARTMENT REQUIREMENTS. CONTACT FIRE DEPARTMENT FOR REQUIREMENTS.)
- MOTORIZED GATE TO COMPLY WITH PROVISIONS OF UL325.

MOTORIZED SWINGING GATE — SCALE: 1/4"=1'-0" — 9

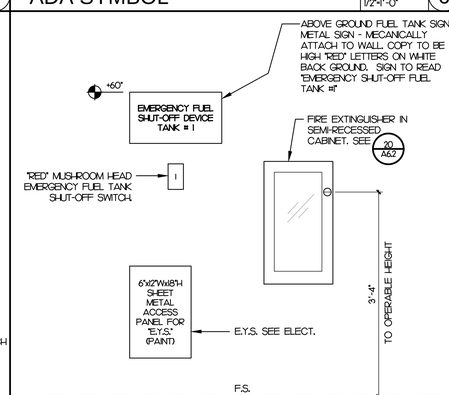

ENLARGED DETAIL — SCALE: 1"=1'-0" — 7

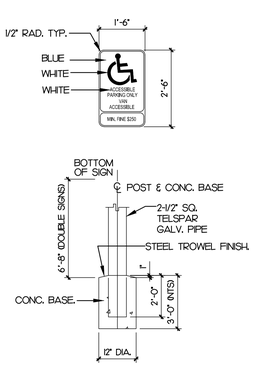

ADA PARKING SIGN — SCALE: 1/2"=1'-0" — 4

NOT FOR BID

STK
42095 ZEVO DR., TEMECULA, CALIFORNIA 92590-3780
Phone: 951.296.9110 Fax: 951.296.6079 Email: stk@stkinc.com

CONSULTANT:

PROJECT ADMINISTERED BY:
SAN BERNARDINO COUNTY PROJECT & FACILITIES MANAGEMENT DEPARTMENT

385 N. ARROWHEAD AVE.
SAN BERNARDINO, CA 92415

PROJECT NAME:
SAN BERNARDINO COUNTY FIRE DEPARTMENT:
FIRE STATION 226

PROJECT # 10.0.0.032
CIP #21-037
CAFM # SAB198
APN # 0273-011-22

1920 DEL ROSA AVE N.
SAN BERNARDINO,
CA 92404

ISSUE INFORMATION:

DATE:	INFORMATION:
04-11-2022	20% CD SET
04-28-2022	50% CD SET
06-15-2022	95% CD SET
09-16-2022	95% CD- 3rd BAY
10-03-2022	PLAN CHECK

SHEET INFORMATION:
STK PROJECT NO.: 374-154-21
SCALE: AS NOTED
DATE: JANUARY 2021
PLOT DATE: –
DRAWING NAME: –

SEAL:
LICENSED ARCHITECT ANTONIO FINAZZO No. C31476 REN. 07-31-23 STATE OF CALIFORNIA

SHEET TITLE:
SITE DETAILS

SHEET NO.:
A1.3

NOT USED

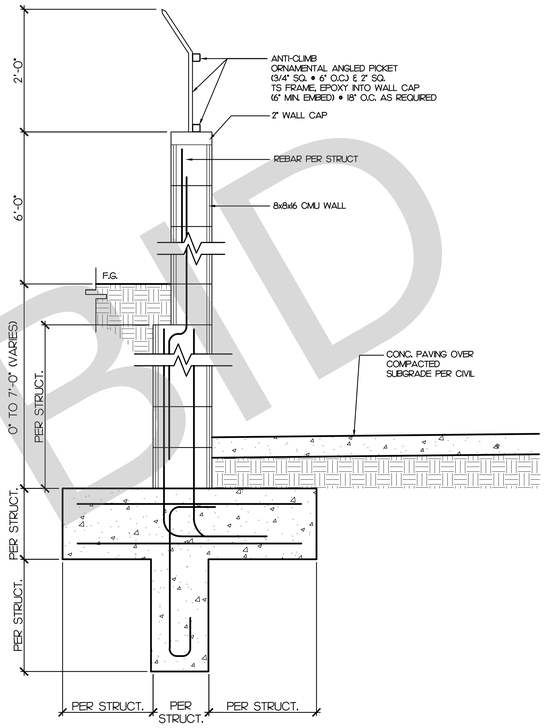

RETAINING WALL — SCALE: 1"=1'-0" — 1

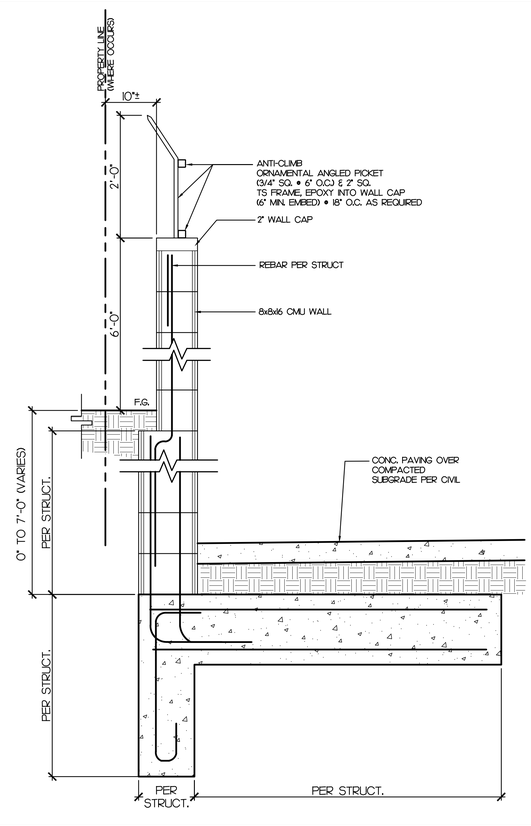

RETAINING WALL @ PROPERTY LINE CONDITION — SCALE: 1"=1'-0" — 4

NOT FOR BID

STK
42095 ZEVO DR., TEMECULA, CALIFORNIA 92590-3780
Phone: 951.296.9110 Fax: 951.296.6079 Email: stk@stkinc.com

CONSULTANT:

PROJECT ADMINISTERED BY:
SAN BERNARDINO COUNTY
PROJECT & FACILITIES
MANAGEMENT DEPARTMENT

385 N. ARROWHEAD AVE.
SAN BERNARDINO, CA 92415

PROJECT NAME:
SAN BERNARDINO
COUNTY FIRE
DEPARTMENT:
FIRE STATION 226

PROJECT # 10.10.10.032
CIP #21-037
CAFM # SAB198
APN # 0273-011-22

1920 DEL ROSA AVE N.
SAN BERNARDINO,
CA 92404

ISSUE INFORMATION:

DATE:	INFORMATION:
04-11-2022	20% CD SET
04-28-2022	50% CD SET
06-15-2022	95% CD SET
09-16-2022	95% CD- 3rd BAY
10-03-2022	PLAN CHECK

SHEET INFORMATION:
STK PROJECT NO.: 374-154-21
SCALE: AS NOTED
DATE: JANUARY 2021
PLOT DATE: –
DRAWING NAME:

SEAL:
LICENSED ARCHITECT
ANTONIO FINALDI
No. C31476
REN. 07-31-23
STATE OF CALIFORNIA

SHEET TITLE:
SITE DETAILS

SHEET NO.:
A1.4

J:\374-SAN#NDO\374-154-21 SBC Fire Station No. 226\Architecture\A1.2 A1.3 & A1.4 - SITE DETAILS.dwg
09/30/2022 4:40PM

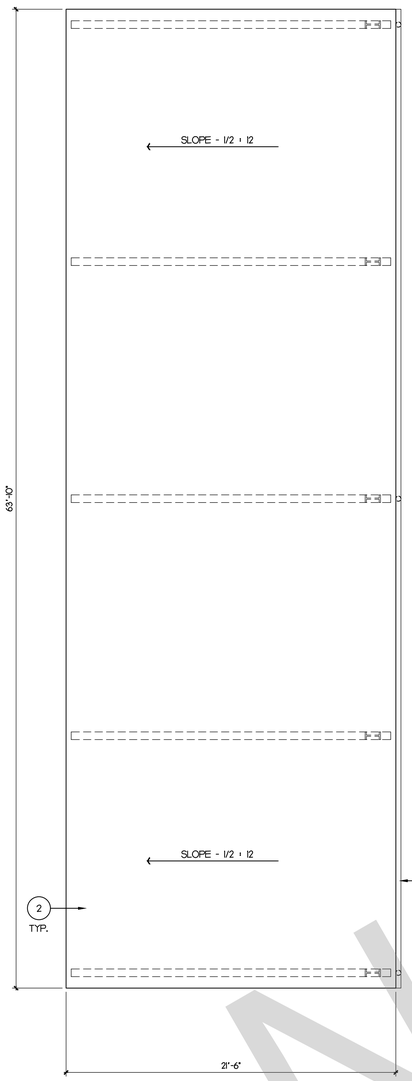

ROOF PLAN

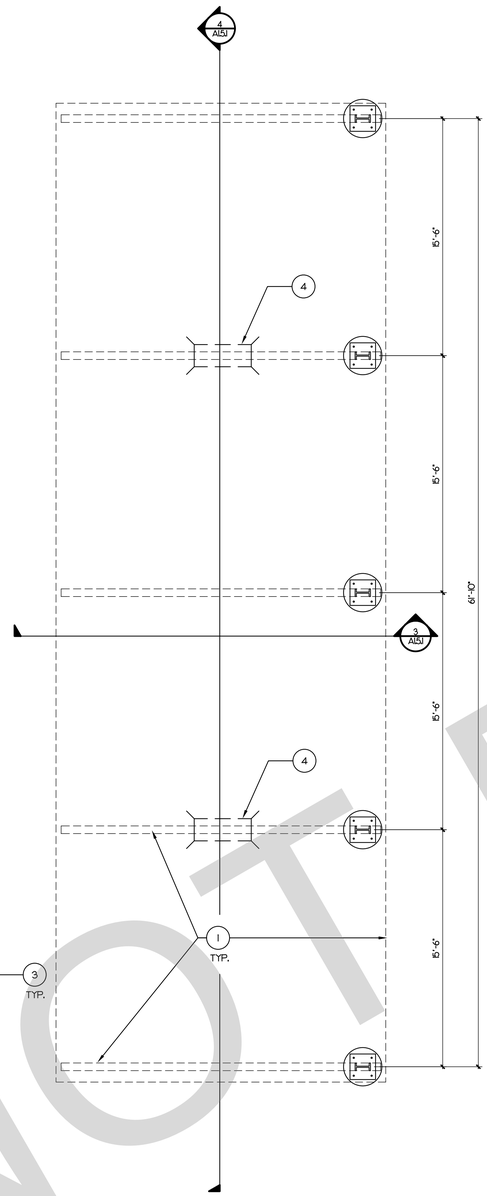

FLOOR PLAN

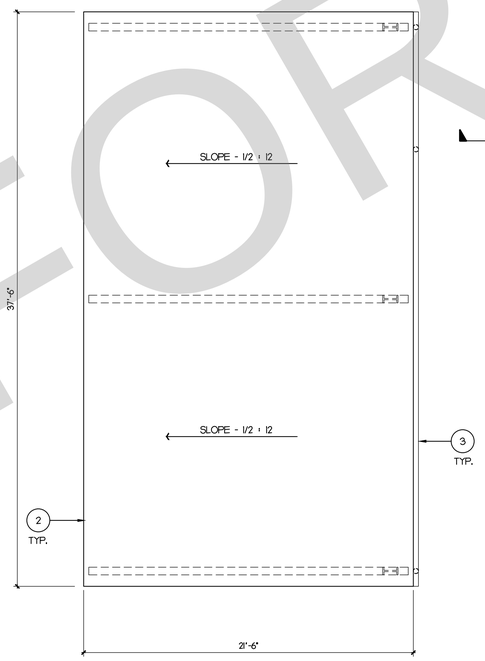

ROOF PLAN

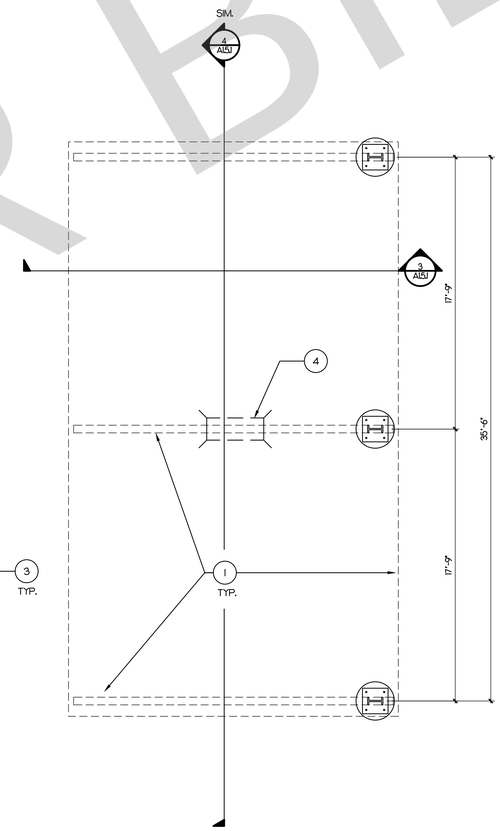

FLOOR PLAN

NOTES:

THE DRAWING & NOTES SHOWN ON THIS SHEET IS FOR INFORMATION & BIDDING PURPOSE ONLY. FINAL DESIGN & ENGINEERING/SHOP DRAWING SHALL BE PROVIDED BY THE GENERAL CONTRACTOR, WET STAMPED BY A REGISTERED CALIFORNIA ENGINEER. SEE SECTION 13 3420 OF SPECIFICATIONS.

W N E S

WEST CANOPY — SCALE: 1/4"=1'-0" — 2

NOTES:

THE DRAWING & NOTES SHOWN ON THIS SHEET IS FOR INFORMATION & BIDDING PURPOSE ONLY. FINAL DESIGN & ENGINEERING/SHOP DRAWING SHALL BE PROVIDED BY THE GENERAL CONTRACTOR, WET STAMPED BY A REGISTERED CALIFORNIA ENGINEER. SEE SECTION 13 3420 OF SPECIFICATIONS.

W N E S

SOUTH CANOPY — SCALE: 1/4"=1'-0" — 1

KEY NOTE

1. PRE-FABRICATED METAL SHADE CANOPY & FOOTING/FOUNDATION WITH PRE-FINISHED METAL ROOF PANELS. SEE SPECIFICATIONS.
2. METAL ROOFING BY PRE-FAB BUILDING MANUFACTURE & PER SPECIFICATIONS.
3. GALVANIZED SHEET METAL GUTTER AND DOWNSPOUT (AT 3 LOCATIONS) BY PRE-FAB METAL BUILDING MANUFACTURER - PAINT. SURFACE DRAIN AWAY FROM STRUCTURE.
4. CAR CANOPY LIGHTING. SEE ELECTRICAL.

A. THE DRAWING SHOWN HEREIN IS FOR REFERENCE ONLY. GENERAL CONTRACTOR SHALL ENGINEER & CONSTRUCT ALL FOUNDATIONS REQUIRED BY THE PRE-FABRICATED METAL BUILDING COMPANY. CONTRACTOR SHALL PROVIDE ENGINEERED & WET STAMPED SHOP DRAWINGS FOR BUILDING & FOUNDATIONS.

B. THE STRUCTURAL COMPONENTS/SIZES SHOWN HEREIN ARE FOR REFERENCE ONLY. CONTRACTOR'S ENGINEER SHALL PROVIDE STRUCTURAL CALCULATIONS VERIFYING STRUCTURAL COMPONENT'S SIZING. SIZE MAY INCREASE OR DECREASE AT NO ADDED COST TO OWNER.

C. ALL BAYS TO REMAIN CLEAR - TYP.

D. NO "X" BRACING IS ALLOWED BETWEEN COLUMNS - TYP.

E. DESIGN: PORTAL / MOMENT FRAMES ONLY - TYP.

F. SPECIFICATIONS ARE UNDER SEPARATE COVER AND ARE PART OF THE BID DOCUMENTS.

G. GENERAL CONTRACTOR TO PROVIDE STAMPED, SIGNED, ENGINEERED SHOP DRAWINGS AS PART OF THE CONTRACT.

H. GENERAL CONTRACTOR TO SUBMIT ALL REQUIRED PLANS & DOCUMENTS THROUGH THE COUNTY LAND USE SERVICES AND IS A "DEFERRED APPROVAL" WITH APPROXIMATE FOUR (4) WEEK LEAD TIME.

I. GENERAL CONTRACTOR TO FIELD VERIFY ALL SITE EXISTING SITE UTILITIES, INCLUDING UNDERGROUND ELEMENTS, PRIOR TO PLACING BUILDING FOUNDATION.

GENERAL NOTES

NOT FOR BID

STK
42095 ZEVO DR., TEMECULA, CALIFORNIA 92590-3780
Phone: 951.296.9110 Fax: 951.296.6079 Email: stk@stkinc.com

CONSULTANT:

PROJECT ADMINISTERED BY:
SAN BERNARDINO COUNTY
PROJECT & FACILITIES
MANAGEMENT DEPARTMENT

385 N. ARROWHEAD AVE.
SAN BERNARDINO, CA 92415

PROJECT NAME:
SAN BERNARDINO
COUNTY FIRE
DEPARTMENT:
FIRE STATION 226

PROJECT # 10.10.1032
CIP #21-037
CAFM # SAB198
APN # 0273-011-22

1920 DEL ROSA AVE N.
SAN BERNARDINO,
CA 92404

ISSUE INFORMATION:

DATE:	INFORMATION:
04-11-2022	20% CD SET
04-28-2022	50% CD SET
06-15-2022	95% CD SET
09-16-2022	95% CD- 3rd BAY
10-03-2022	PLAN CHECK

SHEET INFORMATION:
STK PROJECT NO.: 374-154-21
SCALE: AS NOTED
DATE: JANUARY 2021
PLOT DATE: –
DRAWING NAME:

SEAL:
LICENSED ARCHITECT
ANTONIO FINALI
No. C31476
REN. 07-31-23
STATE OF CALIFORNIA

SHEET TITLE:
CAR PARK
CANOPY
PLANS

SHEET NO.:
A1.5

J:\374-SAMPROJ\374-154-21 SBC Fire Station No. 226\Architecture\A1.5 - CAR PARK CANOPY DETAILS.dwg
10/03/2022 8:29AM

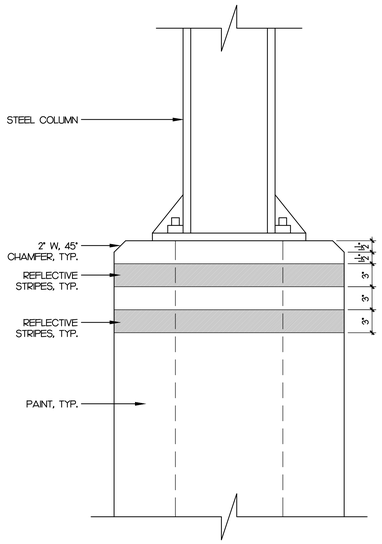

CAISSON STRIPED DETAIL SCALE: 1-1/2"=1'-0" 5

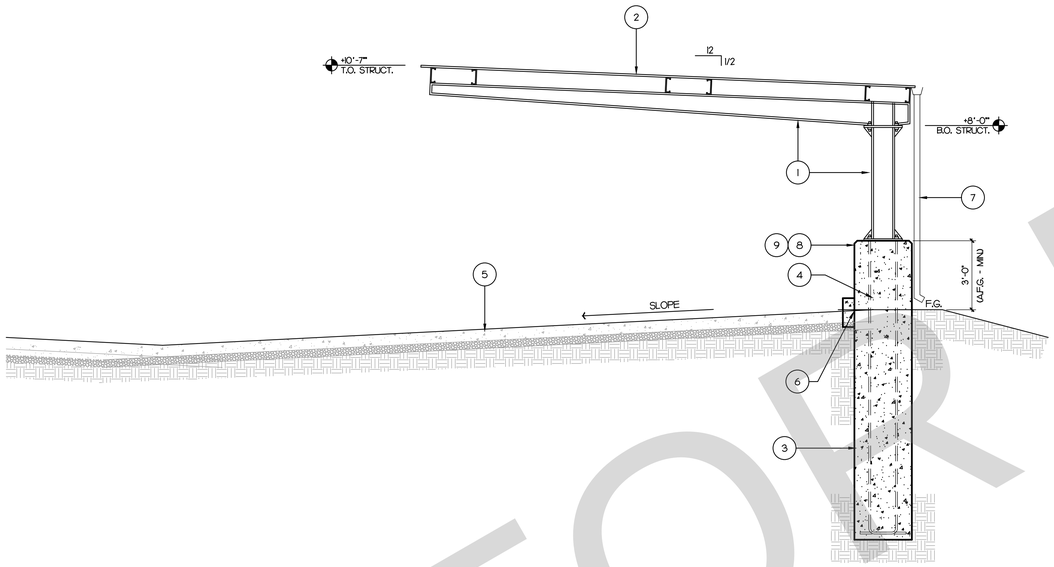

CANOPY ELEVATION / SECTION - SIM. SCALE: 3/8"=1'-0" 3

KEY NOTE

1. PRE-FABRICATED METAL SHADE CANOPY. STRUCTURAL MEMBER SIZING PER MANUF.'S RECOMMENDATIONS. SEE SPECIFICATIONS. PAINT ALL EXPOSED STRUCT. SURFACES AS REQUIRED. COLOR TO BE DETERMINED AND FIELD VERIFY BY OWNER. COORDINATE WITH OWNER.
2. METAL ROOFING & SECONDARY FRAMING BY PRE-FAB BUILDING MANUFACTURE, PER SPECIFICATIONS.
3. CONCRETE FOOTING, STEEL ANCHOR PLATE, REINFORCING, ETC. PER PRE-FAB METAL BUILDING MANUF.'S & SOILS REPORT RECOMMENDATIONS.
4. CONCRETE CURB AS OR WHERE OCCURS PER CIVIL.
5. CONCRETE PAVING AS OCCURS OVER CLASS II BASE PER CIVIL.
6. SEAL AT COLUMN - TYP.
7. GALVANIZED SHEET METAL GUTTER AND DOWNSPOUT (AT 3 LOCATIONS) BY PRE-FAB METAL BUILDING MANUFACTURER - PAINT. SURFACE DRAIN AWAY FROM STRUCTURE.
8. PAINT ALL EXPOSED CAISSONS WITH 2-COATS PRIMERS & 2-COATS "SAFETY YELLOW".
9. INSTALL 2 BANDS OF 3" WIDE 3M REFLECTIVE TAPE AROUND THE CAISSONS. SEE 5/- TYP.

NOTES:

THE DRAWING & NOTES SHOWN ON THIS SHEET IS FOR INFORMATION & BIDDING PURPOSE ONLY. FINAL DESIGN & ENGINEERING/SHOP DRAWING SHALL BE PROVIDED BY THE GENERAL CONTRACTOR, WET STAMPED BY A REGISTERED CALIFORNIA ENGINEER. SEE SECTION 13 3420 OF SPECIFICATIONS.

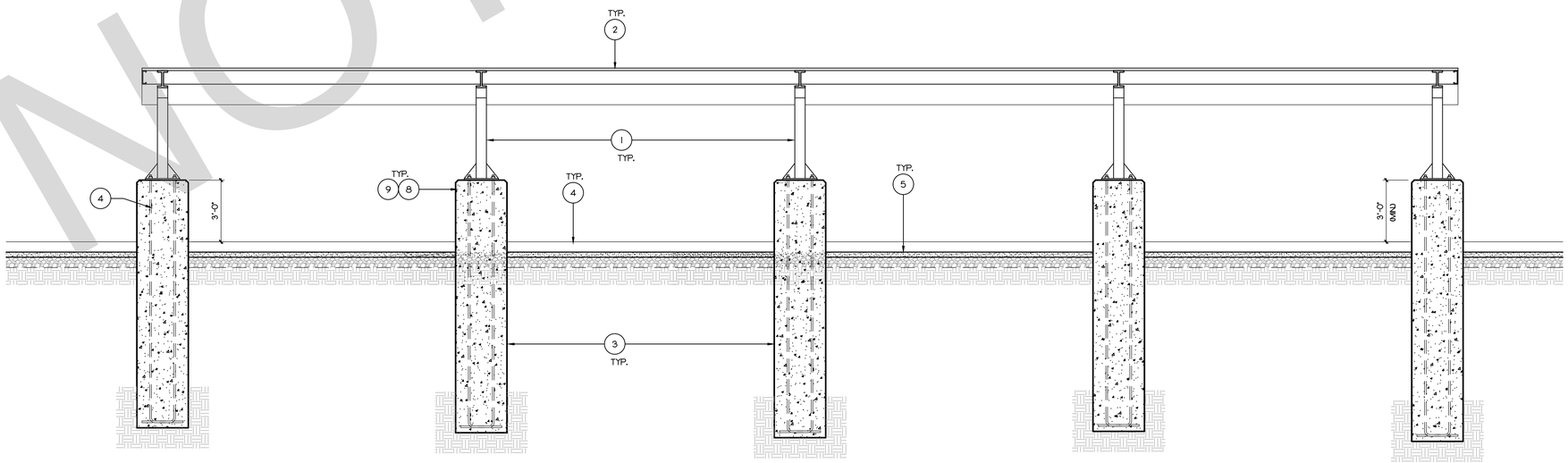

CANOPY ELEVATION / SECTION - SIM. SCALE: 3/8"=1'-0" 4

NOT FOR BID

STK
42095 ZEVO DR., TEMECULA, CALIFORNIA 92590-3780
Phone: 951.296.9110 Fax: 951.296.6079 Email: stk@stkinc.com

CONSULTANT:

PROJECT ADMINISTERED BY:
SAN BERNARDINO COUNTY PROJECT & FACILITIES MANAGEMENT DEPARTMENT

385 N. ARROWHEAD AVE.
SAN BERNARDINO, CA 92415

PROJECT NAME:
SAN BERNARDINO COUNTY FIRE DEPARTMENT:
FIRE STATION 226

PROJECT # 10.010.032
CIP #21-037
CAFM # SAB198
APN # 0273-011-22

1920 DEL ROSA AVE N.
SAN BERNARDINO,
CA 92404

ISSUE INFORMATION:

DATE:	INFORMATION:
04-11-2022	20% CD SET
04-28-2022	50% CD SET
06-15-2022	95% CD SET
09-16-2022	95% CD- 3rd BAY
10-03-2022	PLAN CHECK

SHEET INFORMATION:
STK PROJECT NO.: 374-154-21
SCALE: AS NOTED
DATE: JANUARY 2021
PLOT DATE: –
DRAWING NAME:

SEAL:
LICENSED ARCHITECT ANTONIO FINALI No. C31476 REN. 07-31-23 STATE OF CALIFORNIA

SHEET TITLE:
CANOPY SECTIONS/ ELEVATIONS

SHEET NO.:
A1.5.1

10/03/2022 8:30AM J:\374-SAN\PROJ\374-154-21 SBC Fire Station No. 226\Architect\sheet\A1.5.1 - CANOPY TYPE A&B ELEVATION SECTION.dwg

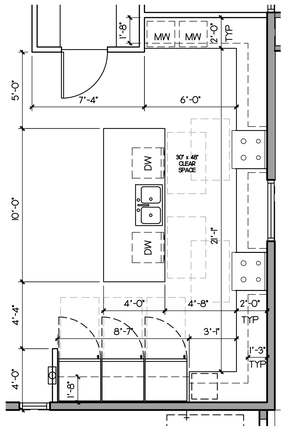

ENLARGED KITCHEN PLAN

SCALE: 1/4"=1'-0" (2)

NOT USED

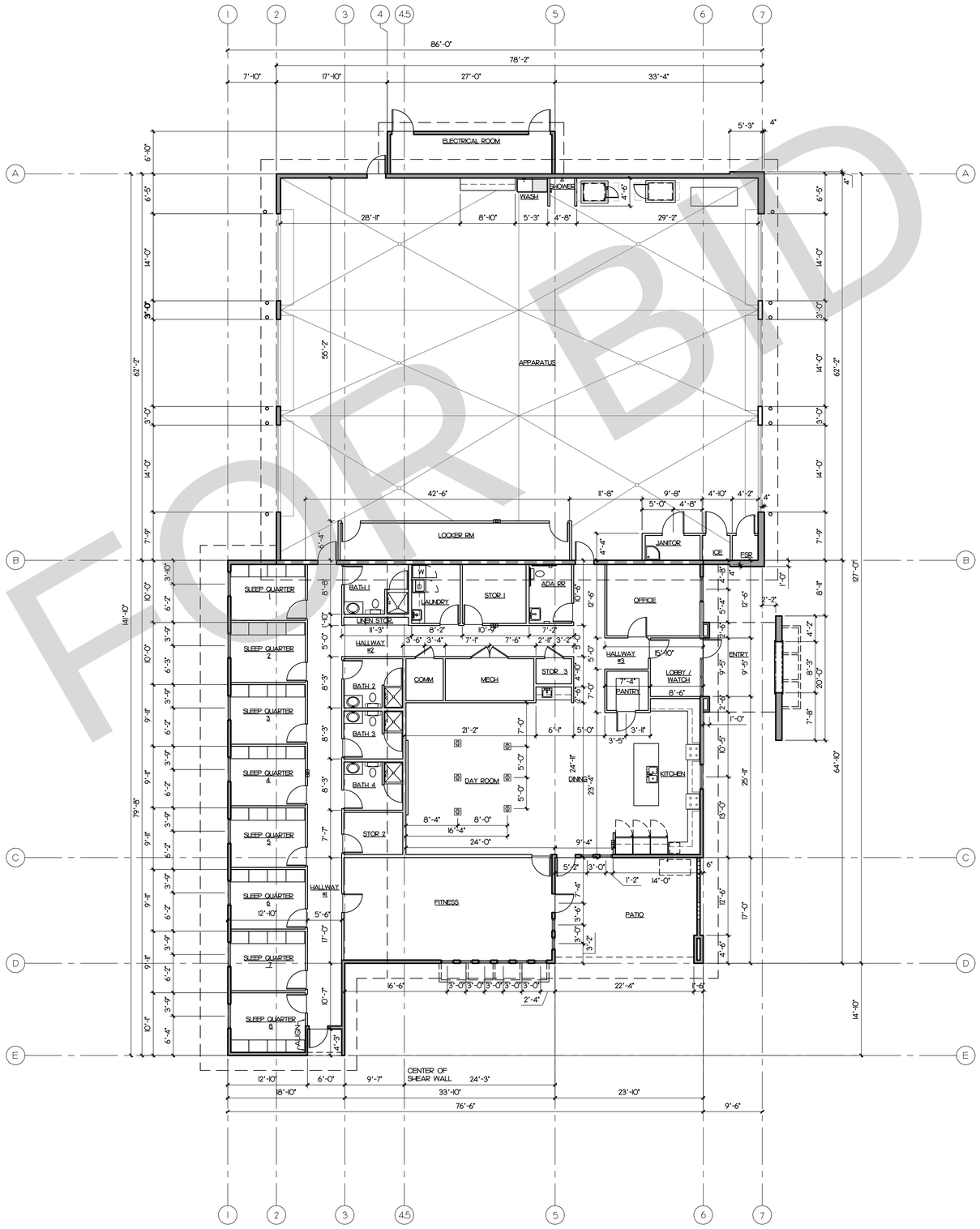

DIMENSION FLOOR PLAN

SCALE: 1/8"=1'-0" (1)

NOT FOR BID

STK
42095 ZEVO DR., TEMECULA, CALIFORNIA 92590-3780
Phone: 951.296.9110 Fax: 951.296.6079 Email: stk@stkinc.com

CONSULTANT:

PROJECT ADMINISTERED BY:
SAN BERNARDINO COUNTY
PROJECT & FACILITIES
MANAGEMENT DEPARTMENT

385 N. ARROWHEAD AVE.
SAN BERNARDINO, CA 92415

PROJECT NAME:
SAN BERNARDINO
COUNTY FIRE
DEPARTMENT:
FIRE STATION 226

PROJECT # 10.10.10.032
CIP #21-037
CAFM # SAB198
APN # 0273-011-22

1920 DEL ROSA AVE N.
SAN BERNARDINO,
CA 92404

ISSUE INFORMATION:

DATE:	INFORMATION:
04-11-2022	20% CD SET
04-28-2022	50% CD SET
06-15-2022	95% CD SET
09-16-2022	95% CD- 3rd BAY
10-03-2022	PLAN CHECK

SHEET INFORMATION:
STK PROJECT NO.: 374-154-21
SCALE: AS NOTED
DATE: JANUARY 2021
PLOT DATE: –
DRAWING NAME:

SEAL:
LICENSED ARCHITECT
ANTONIO FINAU
No. C31476
REN. 07-31-23
STATE OF CALIFORNIA

SHEET TITLE:
DIMENSION PLAN

SHEET NO.:
A2.0

J:\374-SANBNRD\374-154-21 SBC Fire Station No. 226\Architecture\A2.0- DIMENSION FLOOR PLAN.dwg
10/03/2022 8:23AM

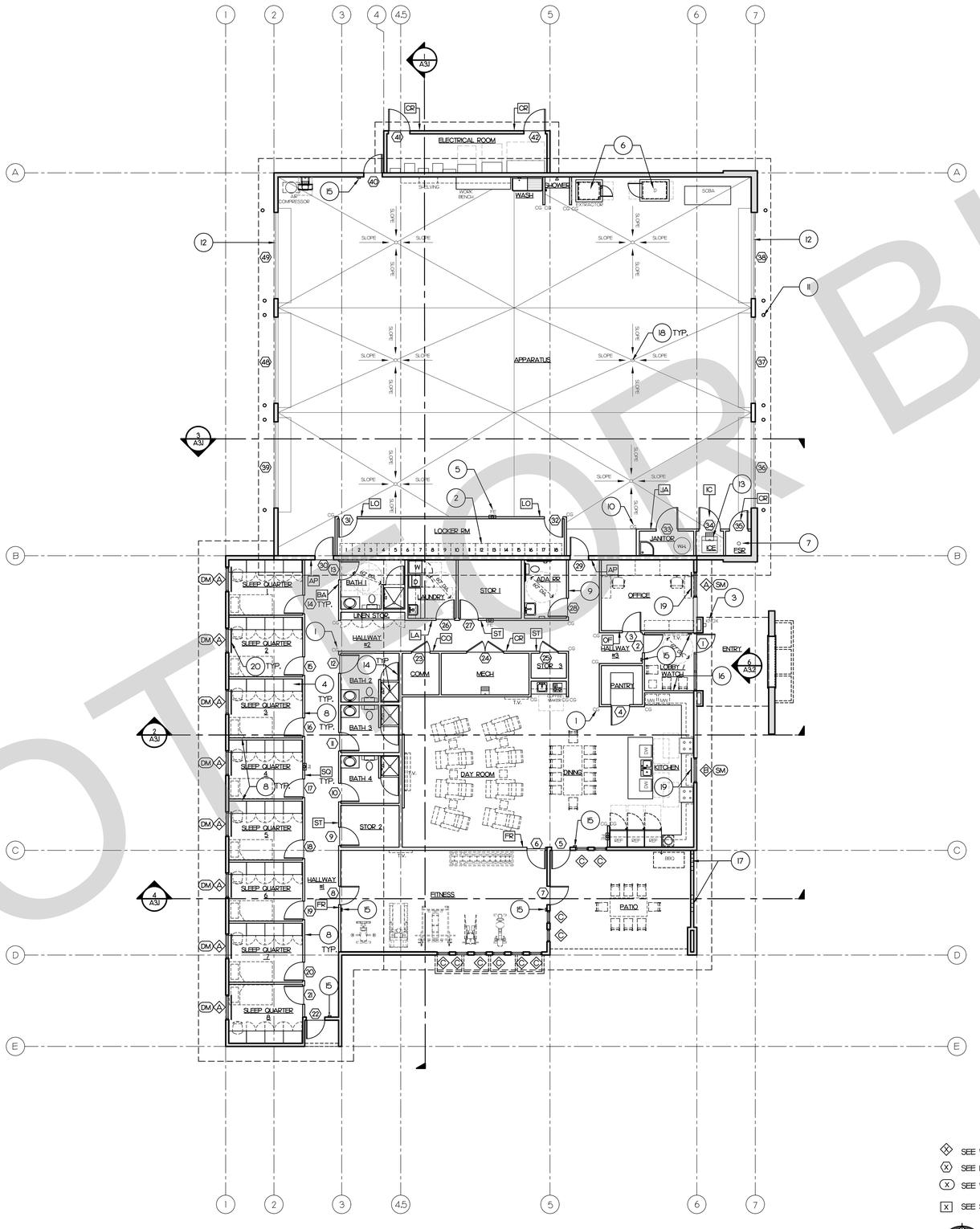

KEY NOTE

1. CORNER GUARDS (PVC). (TYP. OF 13)
2. WALL MOUNTED METAL LOCKERS. PROVIDE BACKING AS REQUIRED. (TYP. OF 18)
3. KNOX BOX, PROVIDE PER COUNTY OF SAN BERNARDINO FIRE DEPT. REQUIRM'TS.
4. WARDROBE LOCKERS. SEE 16/A6.1
5. SEMI-RECESSED FIRE EXTINGUISHER. SEE 20/A6.2
6. +6" HIGH CONC. PAD FOR EXTRACTOR & DRYER. SEE 6/A6.1
7. FIRE SPRINKLER RISER.
8. 1/2 HOUR FIRE RATED WALL. 1A/-
9. ADA RESTROOM WALL AND DOOR SIGNAGE. SEE 8/A2.4
10. CORNER GUARDS (STAINLESS STEEL). (TYP. OF 7)
11. 6" DIA. X 4' HIGH CONCRETE FILLED BOLLARD, PAINT OSHA YELLOW. SEE 7/A1.2
12. OVERHEAD COILING DOORS. (TYP. OF 4) SEE 3/A2.4
13. ICE MACHINE
14. 3' WIDE GLASS SHOWER DOOR & SHOWER RECEPTOR.
15. TACTILE EXIT SIGN. SEE 1/A2.4
16. WALL COVER WITH GRAPHICS.
17. MASONRY SCREEN BLOCK. FOR OPENING REFER TO EXTERIOR ELEVATIONS. SEE 7/A3.2
18. AREA DRAIN. SEE PLUMBING DWGS.
19. MANUAL WINDOW SHADES.
20. MANUAL WINDOW DUAL SHADES AT SLEEP QUARTERS. (TYP. OF 8)

WALL LEGEND

EXTERIOR WALL: 2x6 or 2x8 WOOD STUDS @ 16" O.C. W/ SHEATHING PER STRUCTURAL DRAWINGS W/ CEMENT CEMENT PLASTER W/ R-21 BATT INSULATION & ONE LAYER OF 5/8" TYPE "X" GYP. BD. ON INTERIOR FACE, UNLESS OTHERWISE NOTED.

1 HOUR WALL: 2x6 WOOD STUDS @ 16" O.C. w/ ONE LAYER OF 5/8" TYPE "X" GYP. BD. FROM FLOOR TO UNDERSIDE OF ROOF SHEATHING ON APPARATUS BAY SIDE AND ONE LAYER OF 5/8" TYPE "X" GYP. BD. FROM FLOOR TO UNDERSIDE OF ROOF SHEATHING ON LIVING QUARTERS SIDE W/ PLYWOOD PER STRUCT. DRAWING. USE R-21 BATT INSULATION TO FILL CAVITY.

INTERIOR WALL: 2x6 OR 2x4 WOOD STUDS @ 16" O.C. W/ 5/8" TYPE "X" GYP. BD. ON EACH FACE (UNLESS OTHERWISE NOTED) W/ (SOUND) INSULATION FULL HEIGHT OF WALL. REFER TO FIRE RATED WALL ASSEMBLIES FOR SPECIFICATION.

NOTE: PROVIDE WATER RESISTANT GYP. BD. BEHIND ALL WET AREAS.

NOTE: COORDINATE / SEE STRUCTURAL DRAWINGS FOR ALL +6" HIGH CONC. CURB - CURB WIDTH TO MATCH WALL STUD WIDTH. (TYP. AT ALL EXTERIOR WALLS AND ALL APPARATUS WALLS)

NOTE: ALL PIPING, CONDUITS, WIRES, DUCTS, ETC. SHALL BE CONCEALED INSIDE WALLS OR ATTIC. NO EXCEPTIONS.

EQUIPMENT LIST

QTY.	ITEM	FURNISHED BY	INSTALLED BY
3	REFRIGERATOR/FREEZER	CONTRACTOR	CONTRACTOR
2	DISHWASHER	CONTRACTOR	CONTRACTOR
2	RANGE & HOOD	CONTRACTOR	CONTRACTOR
2	MICROWAVE	CONTRACTOR	CONTRACTOR
1	COFFEE MAKER	CONTRACTOR	CONTRACTOR
1	WASHER	CONTRACTOR	CONTRACTOR
1	DRYER	CONTRACTOR	CONTRACTOR
5	FIRE EXTINGUISHERS	CONTRACTOR	CONTRACTOR
18	METAL LOCKERS	OWNER	CONTRACTOR
24	PLASTIC LAMINATE WARDROBE LOCKERS	CONTRACTOR	CONTRACTOR
1	ICE MACHINE/ BIN	CONTRACTOR	CONTRACTOR
1	P/A SYSTEM - SEE DATA2.2	OWNER	OWNER
1	RADIO COMM. SYSTEMS - SEE DATA2.2	OWNER	OWNER
1	EXTRACTOR WASHER (65lb)	CONTRACTOR	CONTRACTOR
1	COMM. DRYER	CONTRACTOR	CONTRACTOR
1	AIR COMPRESSOR	CONTRACTOR	CONTRACTOR
1	VEHICLE EXHAUST SYSTEM	CONTRACTOR	CONTRACTOR
18	CEILING FANS	CONTRACTOR	CONTRACTOR
2	BIG FORMAT CEILING FANS	CONTRACTOR	CONTRACTOR
1	AUTO TRANSFER SWITCH	CONTRACTOR	CONTRACTOR
2	UNIT HEATER	CONTRACTOR	CONTRACTOR
1	EXERCISE EQUIPMENT	OWNER	CONTRACTOR
1	EMERGENCY GENERATOR	CONTACTOR	CONTRACTOR
2	COMPRESSED AIR HOSE REEL	CONTACTOR	CONTRACTOR
1	2000gal DIESEL FUEL TANK	OWNER (RE-USE)	CONTRACTOR
	FURNITURE	CONTACTOR	CONTRACTOR

NOTES:
- "OWNER" REFERS TO COUNTY OF SAN BERNARDINO FIRE DEPT.

COMPRESSED AIR HOSE REEL:
COXREELS T SERIES, EZ-TSH-3100 OR APPROVED EQUAL.

FURNITURE:
RECLINERS, DINING TABLE & CHAIRS, PATIO TABLE & CHAIRS AND SLEEP QUARTER MATTRESSES ARE BY CONTRACTOR

WALL/DOOR SIGNS LEGEND

TAG	QTY	SIGN	TAG	QTY	SIGN
AP	(2)	APPARATUS	JA	(1)	JANITOR
BA	(4)	BATHROOM 1 to 4	MR	(1)	MECH ROOM
CO	(1)	COMM ROOM	LA	(1)	LAUNDRY
FI	(2)	FITNESS	LO	(2)	LOCKER
FR	(1)	FIRE RISER ROOM	OF	(1)	OFFICE
			ST	(3)	STORAGE
IC	(1)	ICE MACHINE	SQ	(8)	SLEEP QUARTERS 1 to 8
CR		CODE REQUIRED SIGNS			

NOTE: ALSO PROVIDE UNISEX SIGN FOR BATHROOMS 1-4

SEE WINDOW SCHEDULE, A2.3
SEE DOOR SCHEDULE, A2.3
SEE WINDOW BLINDS SCHEDULE, A2.3
SEE SIGN DETAILS, A2.4

INTERIOR ELEVATION KEY

FIRE RATED ASSEMBLIES

GA FILE NO. WP 3005	PROPRIETARY*	1/2 HOUR FIRE	50 to 54 STC SOUND

GYPSUM WALLBOARD, WOOD STUDS

One layer 5/8" proprietary gypsum wallboard or gypsum veneer base applied parallel or at right angles to each side of 2 x 4 wood studs 16" o.c. with 1-5/8" Type S drywall screws 12" o.c. Vertical joints centered over studs and staggered one stud cavity on opposite sides. Horizontal joints need not be staggered or backed. **(LOAD-BEARING)**

Sound tested with resilient channels on one side, 3-1/2" glass fiber insulation and a double layer of 5/8" proprietary gypsum wallboard applied with screws spaced 12 o.c.

PROPRIETARY GYPSUM BOARD

United States Gypsum Company.....5/8" SHEETROCK® Brand UltraLight Panels FIRECODE® 30

Thickness: 4-3/4" (Fire) 6-1/4" (Sound)
Approx. Weight: 7 psf
Fire Test: UL R1319, 11NK03873, 4-15-11, UL Design U407
Sound Test: RAL TL11-132, 5-23-11

1/2 HOUR FIRE RATED WALL

GA FILE NO. WP 3614	GENERIC	1 HOUR FIRE

GYPSUM WALLBOARD, WOOD STUDS

Fire Design:
One layer 5/8" type X gypsum wallboard or gypsum veneer base applied parallel or at right angles to each side of 2 x 4 wood studs 16" o.c. with 1-1/4" Type W screws 12" o.c.
Joints staggered 16" on opposite sides. **(LOAD-BEARING)**

Thickness: 4-3/4" (Fire)
Approx. Weight: 7 psf (Fire)
Fire Test: SWRI 01-4511-619[1], 3-94

1 HOUR FIRE RATED WALL

Roof/Ceiling Assemblies	Fire-rated Construction: Fire Rating	Detail & Physical Data	Description & Test No.	Acoustical Performance: STC	IIC	Description & Test No.	System Reference
	1 hr.		5/8" SHEETROCK Brand Gypsum Panel, FIRECODE C core, pitched wood trusses of min. 2 x 4 lumber, any UL Class A, B or C roofing system—RC-1 channels or equivalent spaced 12" or 16" o.c.—gypsum panels attached with 1" Type S screws, joints finished—optional insulation directly over gypsum ceiling membrane—**UL Des P522**	N/A			S

*Where thermal insulation is shown in assembly drawings, the specific product is required in the assembly to achieve the stated fire rating. Fiberglass insulation cannot be substituted for Technoisolin insulation.
**Where RC-1 is referenced, use RC-1 Resilient Channels or equivalent.

United States Gypsum Company SA824 11

1/2 HOUR FIRE RATED CEILING

1/2 HOUR FIRE RATED 2 TYPE X GYPSUM BOARD PROVIDES 30 MIN. RATING TO AN ASSEMBLY PER ASTM C36.

NOT FOR BID

STK
42095 ZEVO DR., TEMECULA, CALIFORNIA 92590-3780
Phone: 951.296.9110 Fax: 951.296.6079 Email: stk@stkinc.com

CONSULTANT:

PROJECT ADMINISTERED BY:
SAN BERNARDINO COUNTY PROJECT & FACILITIES MANAGEMENT DEPARTMENT

385 N. ARROWHEAD AVE.
SAN BERNARDINO, CA 92415

PROJECT NAME:
SAN BERNARDINO COUNTY FIRE DEPARTMENT:
FIRE STATION 226

PROJECT # 10.0.0.032
CIP #21-037
CAFM # SAB198
APN # 0273-011-22

1920 DEL ROSA AVE N.
SAN BERNARDINO,
CA 92404

ISSUE INFORMATION:

DATE:	INFORMATION:
04-11-2022	20% CD SET
04-28-2022	50% CD SET
06-15-2022	95% CD SET
09-16-2022	95% CD- 3rd BAY
10-03-2022	PLAN CHECK

SHEET INFORMATION:
STK PROJECT NO.: 374-154-21
SCALE: AS NOTED
DATE: JANUARY 2021
PLOT DATE: –
DRAWING NAME: –

SEAL:
LICENSED ARCHITECT ANTONIO FIALLA No. C31476 REN. 07-31-23 STATE OF CALIFORNIA

SHEET TITLE:
REFERENCE PLAN

SHEET NO.:
A2.1

FIRE RATED ASSEMBLIES SCALE: 3/16"=1'-0" 1A

REFERENCE FLOOR PLAN SCALE: 1/8"=1'-0" 1

J:\374-SAWNHS\374-154-21 SBC Fire Station No. 226\Architect\AA2.1 - REFERENCE FLOOR PLAN.dwg
06/30/2022 4:42PM

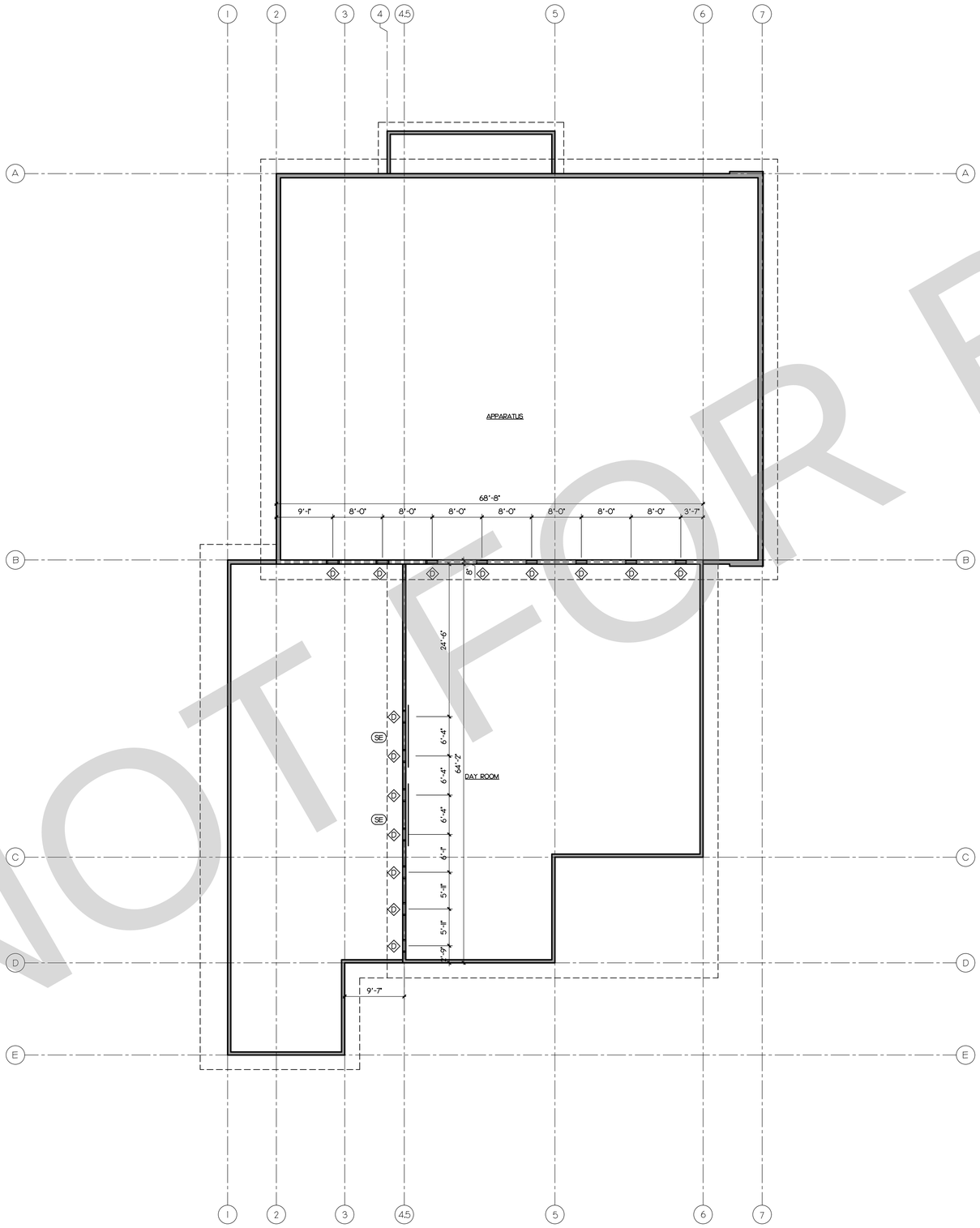

NOT FOR BID

WALL LEGEND

EXTERIOR WALL: 2x6 or 2x8 WOOD STUDS @ 16" O.C. W/ SHEATHING PER STRUCTURAL DRAWINGS W/ CEMENT CEMENT PLASTER W/ R-21 BATT INSULATION & ONE LAYER OF 5/8" TYPE "X" GYP. BD. ON INTERIOR FACE. UNLESS OTHERWISE NOTED.

1 HOUR WALL: 2x6 WOOD STUDS @ 16" O.C. w/ ONE LAYER OF 5/8" TYPE "X" GYP. BD. FROM FLOOR TO UNDERSIDE OF ROOF SHEATHING ON APPARATUS BAY SIDE AND ONE LAYER OF 5/8" TYPE "X" GYP. BD. FROM FLOOR TO UNDERSIDE OF ROOF SHEATHING ON LIVING QUARTERS SIDE W/ PLYWOOD PER STRUCT. DRAWING. USE R-21 BATT INSULATION TO FILL CAVITY.

NOTE: ALL PIPING, CONDUITS, WIRES, DUCTS, ETC. SHALL BE CONCEALED INSIDE WALLS OR ATTIC. NO EXCEPTIONS.

SEE WINDOW SCHEDULE, A2.3

SEE WINDOW BLINDS SCHEDULE, A2.3

INTERIOR ELEVATION KEY

CLERESTORY FLOOR PLAN

SCALE: 1/8"=1'-0" (1)

STK
42095 ZEVO DR., TEMECULA, CALIFORNIA 92590-3780
Phone: 951.296.9110 Fax: 951.296.6079 Email: stk@stkinc.com

CONSULTANT:

PROJECT ADMINISTERED BY:
SAN BERNARDINO COUNTY
PROJECT & FACILITIES
MANAGEMENT DEPARTMENT

385 N. ARROWHEAD AVE.
SAN BERNARDINO, CA 92415

PROJECT NAME:

SAN BERNARDINO
COUNTY FIRE
DEPARTMENT:

FIRE STATION 226

PROJECT # 10.10.10.32

CIP #21-037

CAFM # SAB198

APN # 0273-011-22

1920 DEL ROSA AVE N.
SAN BERNARDINO,
CA 92404

ISSUE INFORMATION:

DATE:	INFORMATION:
04-11-2022	20% CD SET
04-28-2022	50% CD SET
06-15-2022	95% CD SET
09-16-2022	95% CD- 3rd BAY
10-03-2022	PLAN CHECK

SHEET INFORMATION:

STK PROJECT NO.: 374-154-21
SCALE: AS NOTED
DATE: JANUARY 2021
PLOT DATE: –
DRAWING NAME:

SEAL:

LICENSED ARCHITECT
ANTONIO FINALE
No. C31476
REN. 07-31-23
STATE OF CALIFORNIA

SHEET TITLE:

CLERESTORY
FLOOR PLAN

SHEET NO.:

A2.2

10/03/2022 8:13 AM J:\374-SAN%20BDO\374-154-21 SBC Fire Station No. 226\Architecture\A2.2 - CLERESTORY FLOOR PLAN.dwg

DOOR SCHEDULE

	MARK	DOOR SIZE WD-HT	DOOR SIZE THK	TYPE	MATL	FIN	GLAZING	FIRE RATING LABEL (MIN)	FRAME MATL	FRAME DETAIL, SHEET A2.4 HEAD	JAMB	SILL	HARDWARE GROUP (SEE SPEC'S)	REMARKS
FIRE STATION	1	3070	1-3/4	D	AL	AL	TP	-	HM	12	13	14		1 2 3 4
	2	3070	1-3/4	B	SC	WD	TP	-	HM	2	2	9B		
	3	3070	1-3/4	B	SC	WD	TP	-	HM	2	2	9A		
	4	3070	1-3/4	A	SC	WD	-	-	HM	2	2	9B		12
	5	3070	1-3/4	E	HM	MP	TP	-	HM	1	1	10		2 3 4
	6	3070	1-3/4	E	SC	WD	TP	-	HM	2	2	9E		
	7	3070	1-3/4	E	HM	MP	TP	-	HM	1	1	10		2 3 4
	8	3070	1-3/4	E	SC	WD	TP	-	HM	2	2	9E		
	9	3070	1-3/4	A	SC	WD	-	-	HM	2	2	9D		
	10	3070	1-3/4	A	SC	WD	-	-	HM	2	2	9C		12
	11	3070	1-3/4	A	SC	WD	-	-	HM	2	2	9C		12
	12	3070	1-3/4	A	SC	WD	-	-	HM	2	2	9C		12
	13	3070	1-3/4	A	SC	WD	-	-	HM	2	2	9C		12
	14	3070	1-3/4	A	SC	WD	-		HM	2	2	9A		2
	15	3070	1-3/4	A	SC	WD	-		HM	2	2	9A		2
	16	3070	1-3/4	A	SC	WD	-		HM	2	2	9A		2
	17	3070	1-3/4	A	SC	WD	-		HM	2	2	9A		2
	18	3070	1-3/4	A	SC	WD	-		HM	2	2	9A		2
	19	3070	1-3/4	A	SC	WD	-		HM	2	2	9A		2
	20	3070	1-3/4	A	SC	WD	-		HM	2	2	9A		2
	21	3070	1-3/4	A	SC	WD	-		HM	2	2	9A		2
	22	3070	1-3/4	B	HM	MP	TP	-	HM	1	1	10		2 3 4
	23	4070	1-3/4	F	HM	MP	-	-	HM	2	2	9D		9
	24	6070	1-3/4	C	HM	MP	-	-	HM	2	2	9D		9
	25	3070	1-3/4	A	SC	WD	-	-	HM	2	2	9D		
	26	3070	1-3/4	E	SC	WD	TP	-	HM	2	2	9B		12
	27	3070	1-3/4	A	SC	WD	-	-	HM	2	2	9D		
	28	3070	1-3/4	A	SC	WD	-	-	HM	2	2	9C		8 12
	29	3070	1-3/4	B	HM	MP	TP	20	HM	4	4	10		2 5 10
	30	3070	1-3/4	B	HM	MP	TP	20	HM	4	4	10		2 5 10
	31	3070	1-3/4	F	HM	MP	-	-	HM	2	2	9B		2 9
	32	3070	1-3/4	F	HM	MP	-	-	HM	2	2	9B		2 9
	33	4070	1-3/4	A	HM	MP	-	-	HM	2	2	9B		
	34	3670	1-3/4	A	HM	MP	-	-	HM	2	2	9B		9
	35	3070	1-3/4	A	HM	MP	-	-	HM	2	2	9B		
	36	140140	-	G	RF	MF	-	-	RF	3	3	-		
	37	140140	-	G	RF	MF	-	-	RF	3	3	-		
	38	140140	-	G	RF	MF	-	-	RF	3	3	-		
	39	140140	-	G	RF	MF	-	-	RF	3	3	-		
	47	140140	-	G	RF	MF	-	-	RF	3	3	-		
	48	140140	-	G	RF	MF	-	-	RF	3	3	-		
	40	3070	1-3/4	B	HM	MP	-	-	HM	1	1	10		2 3 4
	41	4070	1-3/4	A	HM	MP	-	-	HM	1	1	10		
	42	4070	1-3/4	F	HM	MP	-	-	HM	1	1	10		9
STORAGE BULDING	43	3070	1-3/4	A	HM	MP	-	-	HM	1	1	10		9
	44	8080	-	H	RF	MF	-	-	RF	3	3	-		7
GATES	45	4070	-	J	MG	PC	-	-		-	-	-		
	46	3070	-	J	MG	PC	-	-		-	-	-		11

(X) DOOR MARK PER REFERENCE PLAN, A2.2

NOTES

- ALL DOORS TO HAVE THE BOTTOM OF 10" OF SMOOTH, UNINTERRUPTED SURFACE OR SHALL BE PROVIDED WITH A 10" HIGH SMOOTH METAL PANEL AT THE BOTTOM OF THE DOOR.
- ALL EXITS TO BE OPENABLE FROM THE INSIDE WITHOUT THE USE OF A KEY OR ANY SPECIAL KNOWLEDGE OR EFFORT.

MATL/GLAZING KEY

HM	HOLLOW METAL
RF	ROLL FORMED GALVANIZED STEEL
SC	SOLID CORE
MG	METAL GATE
TP	TEMPERED PLATE
GL	GLASS
AL	ALUMINUM

FINISH KEY

MF	MANUFACTURE'S FINISH
MP	METAL PAINTED
WD	WOOD VENEER
PC	POWDER COATED
AL	ALUMINUM

REMARKS KEY

1. INSTALL SIGN ABOVE DOOR STATING "THIS DOOR TO REMAIN UNLOCKED WHEN BUILDING IS OCCUPIED". PROVIDE 1" HIGH LETTERS ON A CONTRASTING BACKGROUND.
2. W/ CLOSER.
3. PROVIDE EXIT. SIGNAGE - SEE (1/A2.4)
4. LOCK OR LATCH SHALL BE OPENABLE FROM THE INSIDE WITHOUT THE USE OF A KEY OR ANY SPECIAL KNOWLEDGE OR EFFORT.
5. PROVIDE DOOR FRAME WITH SEAL
6. FIELD VERIFY SIZE.
7. PROVIDE WEATHER STRIPPING AT JAMBS.
8. PROVIDE A.D.A. R.R. SIGNAGE. SEE (8/A2.4)
9. PROVIDE LOUVER, SEE MECH.
10. WITH FIRE RESISTANT GLAZING.
11. WITH CIPHER LOCK
12. UNDERCUT DOOR 1"

FINISH SCHEDULE

ROOM NAME	FLOOR MTL	FLOOR BASE	WALL A MTL	WALL A FIN	WALL B MTL	WALL B FIN	WALL C MTL	WALL C FIN	WALL D MTL	WALL D FIN	CEILING MTL	CEILING FIN	REMARKS
LOBBY / WATCH	F4	B1	W1	A	W1	A	W1/W7	A/C	W1	A	C2	C	
ADA BATH	F1	B2	W1/W3	A/C	W1/W3	A/C	W1/W3	A/C	W1/W3	A/C	C1	A	WATER RESISTANT GYP. BD. FROM FLOOR TO BOTTOM OF CEILING
OFFICE	F2	B1	W1	A	W1	A	W1	A	W1	A	C2	C	
KITCHEN	F4	B1	W1/W3	A	W1/W3	A/C	W1/W3	A	W1	A	C1	A	
DINING	F4	B1	W1	A	W1	A	W1	A	W1	A	C2	C	
DAYROOM	F2	B1	W1	A	W1	A	W1	A	W1	A	C1/C2	A/C	
FITNESS	F3	B1	W1	A	W1	A	W1	A	W1	A	C1/C2	A/C	
LAUNDRY	F4	B1	W1	A	W1	A	W1	A	W1	A	C2	C	PROVIDE WATER RESISTANT GYP. BD. FOR WALL "D" ONLY
SLEEP QUARTER'S #1	F2	B1	W1	A	W1	A	W1	A	W1	A	C1	A	
SLEEP QUARTER'S #2	F2	B1	W1	A	W1	A	W1	A	W1	A	C1	A	
SLEEP QUARTER'S #3	F2	B1	W1	A	W1	A	W1	A	W1	A	C1	A	
SLEEP QUARTER'S #4	F2	B1	W1	A	W1	A	W1	A	W1	A	C1	A	
SLEEP QUARTER'S #5	F2	B1	W1	A	W1	A	W1	A	W1	A	C1	A	
SLEEP QUARTER'S #6	F2	B1	W1	A	W1	A	W1	A	W1	A	C1	A	
SLEEP QUARTER'S #7	F2	B1	W1	A	W1	A	W1	A	W1	A	C1	A	
SLEEP QUARTER'S #8	F2	B1	W1	A	W1	A	W1	A	W1	A	C1	A	
BATH #1	F1	B2	W1/W3	A/C	W1/W3	A/C	W1/W3	A/C	W1/W3	A/C	C1	A	WATER RESISTANT GYP. BD. FROM FLOOR TO BOTTOM OF CEILING
BATH #2	F1	B2	W1/W3	A/C	W1/W3	A/C	W1/W3	A/C	W1/W3	A/C	C1	A	WATER RESISTANT GYP. BD. FROM FLOOR TO BOTTOM OF CEILING
BATH #3	F1	B2	W1/W3	A/C	W1/W3	A/C	W1/W3	A/C	W1/W3	A/C	C1	A	WATER RESISTANT GYP. BD. FROM FLOOR TO BOTTOM OF CEILING
BATH #4	F1	B2	W1/W3	A/C	W1/W3	A/C	W1/W3	A/C	W1/W3	A/C	C1	A	WATER RESISTANT GYP. BD. FROM FLOOR TO BOTTOM OF CEILING
PANTRY	F4	B1	W1	A	W1	A	W1	A	W1	A	C1	A	
STOR #1	F6	B1	W1	A	W1	A	W1	A	W1	A	C1	A	
STOR #2	F6	B1	W1	A	W1	A	W1	A	W1	A	C1	A	
STOR #3	F6	B1	W1	A	W1	A	W1	A	W1	A	C1	A	
HALLWAY #1	F4	B1	W1	A	W1	A	W1	A	W1	A	C2	C	
HALLWAY #2	F4	B1	W1	A	W1	A	W1	A	W1	A	C2	C	
HALLWAY #3	F4	B1	W1	A	W1	A	W1	A	W1	A	C2	C	
COMMUNICATION	F5	-	W1	A	W6	-	W6	-	W6	-	C1	A	FIRE RESISTANT PLYWOOD AT ALL WALLS.
MECH	F5	-	W1	A	W1	A	W1	A	W1	A	C1	A	
COVERED PATIO	F5	-	W4	C	W4	C	W4	C	W4	C	C4	C	
APPARATUS	F6	B3	W1/W2	A/C	W1/W2	A/C	W1/W2	A/C	W1/W2	A/C	C3/C5	-	PROVIDE SANITARY WALL PANEL FROM +6" TO +8'-6" - TYP. FOR ALL WALLS
LOCKER ROOM	F6	B1/B3	W1	A	W1	A	W1	A	W1	A	C1	A	
JANITOR	F6	B1/B3	W2	C	W2	C	W2	C	W2	C	C1	A	PROVIDE SANITARY WALL PANEL FOR WALLS "C" & "D".
ICE MACHINE	F6	B1/B3	W2	C	W2	C	W2	C	W2	C	C1	A	PROVIDE WATER RESISTANT GYP. BD.
FSR	F5	-	W1	A	W1	A	W1	A	W1	A	-	-	
SHOWER	F6	B1/B3	W1/W2	A/C	W1/W2	A/C	-	-	W1/W2	A/C	-	-	PROVIDE WATER RESISTANT GYP. BD.
ELECTRICAL ROOM	F5	-	W1	A	W1	A	W1	A	W1	A	C1	A	
STORAGE BUILDING	F6	B3	W5	C	W5	C	W5	C	W5	C	C3	C	

MATERIAL KEY

FLOOR

F1	CERAMIC TILE OVER FULL MORTAR BED 2X2 PORCERLAIN TILE
F2	CARPET TILES
F3	RESILIENT ATHLETIC FLOORING
F4	LUXURY VINYL TILE
F5	EXPOSED CONCRETE, MEDIUM BROOM
F6	EXPOSED CONCRETE, SMOOTH TROWEL FINISH (SEALED)

BASE

B1	TOP SET BASE
B2	CERAMIC TILE, COVED
B3	6" CONC. BASE W/ SEALER

WALL

W1	GYPSUM BOARD, 5/8" TYPE X "MOLD RESISTANT" AND TEXTURED (MEDIUM ORANGE PEEL (PROVIDE WATER RESISTIVE TYPE BEHIND WET AREAS)
W2	SANITARY WALL PANEL
W3	CERAMIC TILE OVER CEMENT BOARD
W4	CEMENT PLASTER (STUCCO)
W5	5/8" PLYWOOD, FULL HEIGHT
W6	3/4" PLYWOOD, FULL HEIGHT
W7	WALL COVER WITH DIGITAL IMAGE

CEILING

C1	5/8" TYPE X GYPSUM BOARD, TAPED AND TEXTURED w/ MEDIUM ORANGE PEEL FINISH (PROVIDE MOISTURE RESISTIVE TYPE IN WET AREAS)
C2	2X2 LAY IN CEILING
C3	PAINT EXPOSED STRUCTURE
C4	CEMENT PLASTER CEILING
C5	VINYL FACED INSULATION

FINISH KEY

A	PAINT, EGGSHELL
B	CERAMIC TILE
C	MANUFACTURER'S FINISH (CLEAN)

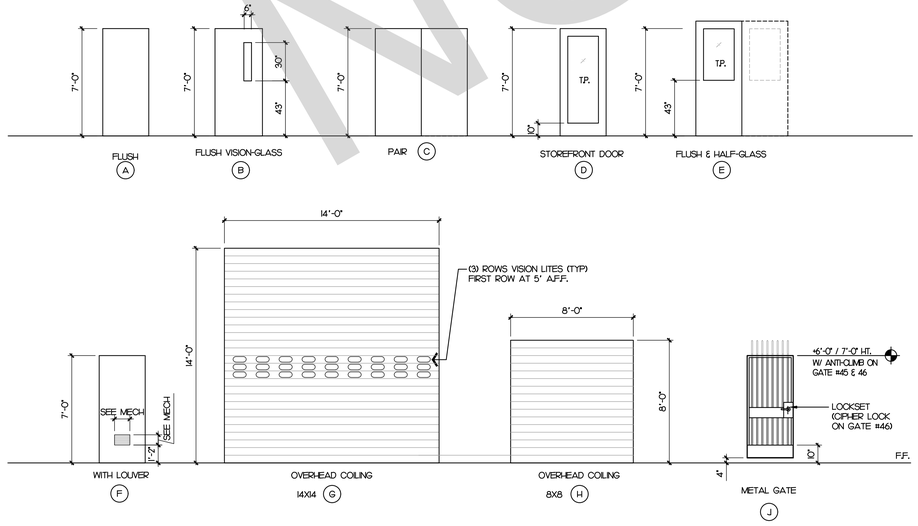

DOOR TYPES — SCALE: 1/4"=1'-0" (2)

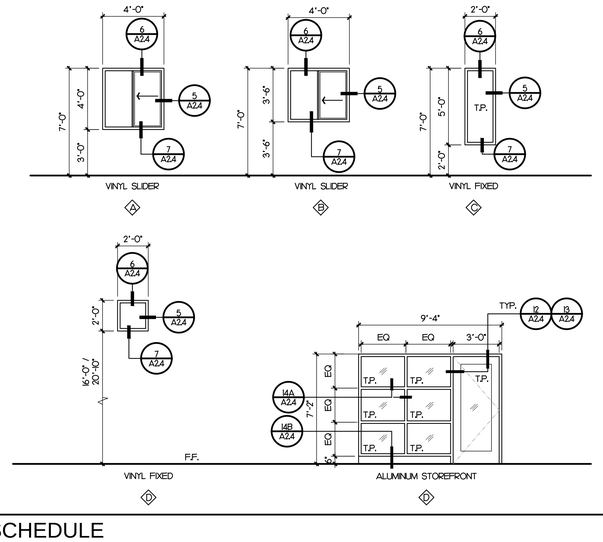

WINDOW LEGEND

- (X) - WINDOW TYPES PER REFERENCE PLAN, A2.1 & A2.2
- T.P. - TEMPERED PLATE

WINDOW NOTES

- ALL EXTERIOR WINDOWS DUAL GLAZED. FIELD MEASURE ALL ROUGH OPENINGS PRIOR TO FABRICATION/INSTALLATION.
- ALL WINDOWS SIZES SHOWN ARE NOMINAL SIZE. SEE MFR. INFORMATION FOR ROUGH OPENING SIZES.

WINDOW BLINDS LEGEND

- (DM) DUAL MANUAL
- (SE) SINGLE MOTORIZED
- (SM) SINGLE MANUAL

WINDOW SCHEDULE — SCALE: 1/4"=1'-0" (1)

NOT FOR BID

STK
42095 ZEVO DR., TEMECULA, CALIFORNIA 92590-3780
Phone: 951.296.9110 Fax: 951.296.6079 Email: stk@stkinc.com

CONSULTANT:

PROJECT ADMINISTERED BY:
SAN BERNARDINO COUNTY
PROJECT & FACILITIES
MANAGEMENT DEPARTMENT

385 N. ARROWHEAD AVE.
SAN BERNARDINO, CA 92415

PROJECT NAME:
SAN BERNARDINO
COUNTY FIRE
DEPARTMENT:
FIRE STATION 226

PROJECT # 10.10.10.032
CIP #21-037
CAFM # SAB198
APN # 0273-011-22

1920 DEL ROSA AVE N.
SAN BERNARDINO,
CA 92404

ISSUE INFORMATION:

DATE:	INFORMATION:
04-11-2022	20% CD SET
04-28-2022	50% CD SET
06-15-2022	95% CD SET
09-16-2022	95% CD- 3rd BAY
10-03-2022	PLAN CHECK

SHEET INFORMATION:
STK PROJECT NO.: 374-154-21
SCALE: AS NOTED
DATE: JANUARY 2021
PLOT DATE: -
DRAWING NAME: -

SEAL:
LICENSED ARCHITECT ANTONIO FINAZZO No. C31476 REN. 07-31-23 STATE OF CALIFORNIA

SHEET TITLE:
SCHEDULES

SHEET NO.:
A2.3

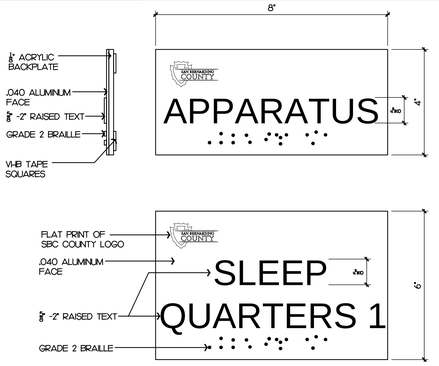

DETAIL — SCALE: NTS — 15

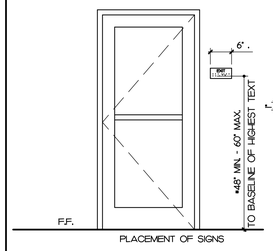

PLACEMENT OF SIGNS

EXIT
ADD WALL SIGNAGE ADJACENT TO LATCH SIDE OF DOOR "EXIT" OR "TO EXIT" WITH TACTILE GRADE II BRAILLE AND 5/8"-2" HIGH RAISED LETTERS 1/32" SANS SERIF NON-GLARE, HIGH CONTRAST, WHERE OCCURS.

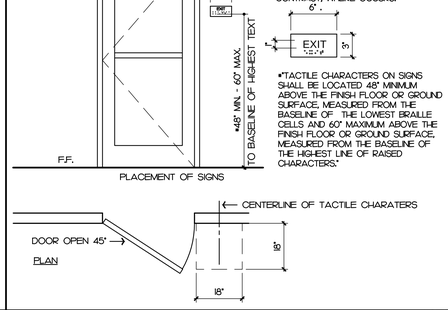

TACTILE CHARACTERS ON SIGNS SHALL BE LOCATED 48" MINIMUM ABOVE THE FINISH FLOOR OR GROUND SURFACE, MEASURED FROM THE BASELINE OF THE LOWEST BRAILLE CELLS AND 60" MAXIMUM ABOVE THE FINISH FLOOR OR GROUND SURFACE, MEASURED FROM THE BASELINE OF THE HIGHEST LINE OF RAISED CHARACTERS.

DETAIL — SCALE: 1/2"=1'-0" — 11

DOOR SIGNS

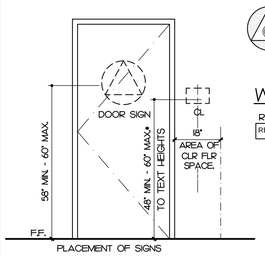

PLACEMENT OF SIGNS

UNISEX
EQUALATERAL TRIANGLE 1/4" THICK, SUPER IMPOSED ON 12" DIA. CIRCLE, 1/4" THICK

WALL SIGNS

RESTROOM: RESTROOM

RAISED LETTERS:
5/8" - 2" HIGH RAISED 1/32" SANS SERIF NON-GLARE HIGH CONTRAST

BRAILLE LETTERS:
GRADE II DOTS 1/10" O.C. IN EA. CELL CELLS RAISED 1/40"

NOTE:
TACTILE CHARACTERS ON SIGNS SHALL BE LOCATED 48" MINIMUM ABOVE THE FINISH FLOOR OR GROUND SURFACE, MEASURED FROM THE BASELINE OF THE LOWEST BRAILLE CELLS AND 60" MAXIMUM ABOVE THE FINISH FLOOR OR GROUND SURFACE, MEASURED FROM THE BASELINE OF THE HIGHEST LINE OF RAISED CHARACTERS.

DETAIL — SCALE: 1/2"=1'-0" — 8

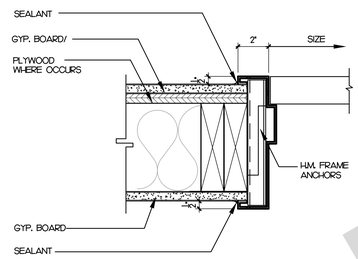

DETAIL — SCALE: 3"=1'-0" — 4

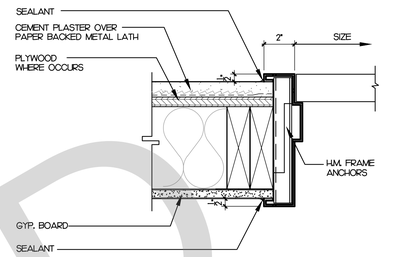

EXTERIOR DOOR JAMB — SCALE: 3"=1'-0" — 1

NOT USED

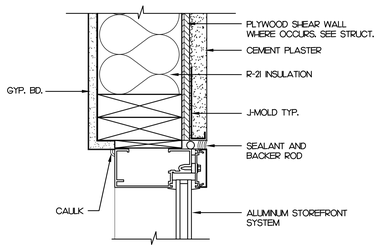

STOREFRONT HEAD — SCALE: 3"=1'-0" — 12

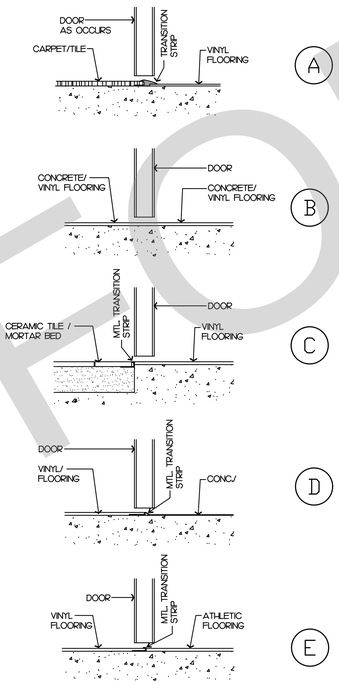

DETAIL — SCALE: 3"=1'-0" — 9

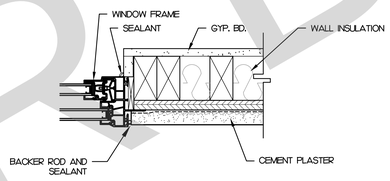

WINDOW JAMB — SCALE: 3"=1'-0" — 5

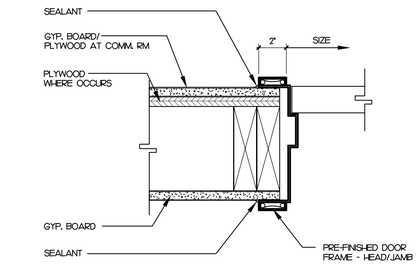

INTERIOR DOOR JAMB — SCALE: 3"=1'-0" — 2

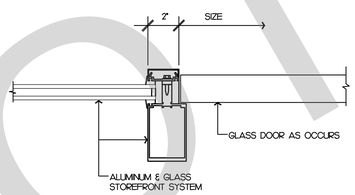

DOOR HEAD/JAMB @ STOREFRONT — SCALE: 3"=1'-0" — 13

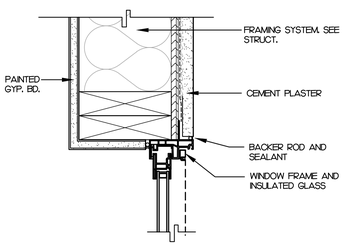

WINDOW HEAD — SCALE: 3"=1'-0" — 6

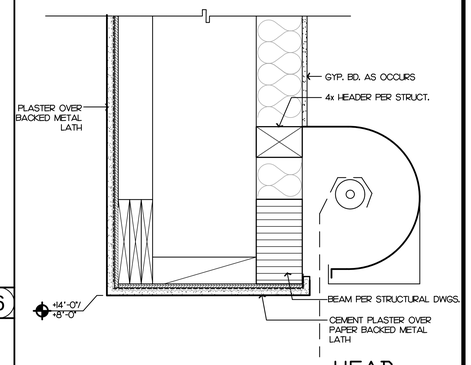

HEAD

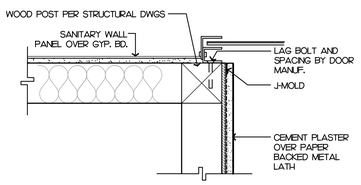

JAMB

DETAIL — SCALE: 1-1/2"=1'-0" — 3

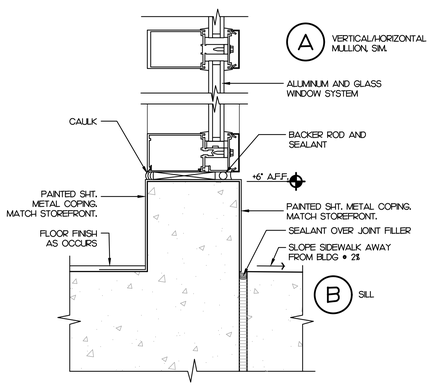

SILL & MULLION @ STOREFRONT — SCALE: 3"=1'-0" — 14

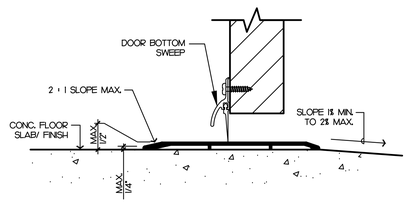

DETAIL — SCALE: 6"=1'-0" — 10

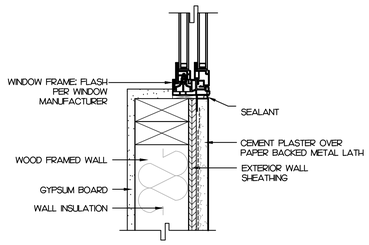

WINDOW SILL — SCALE: 3"=1'-0" — 7

FOR BID
NOT

STK
42095 ZEVO DR., TEMECULA, CALIFORNIA 92590-3780
Phone: 951.296.9110 Fax: 951.296.6079 Email: stk@stkinc.com

CONSULTANT:

PROJECT ADMINISTERED BY:
SAN BERNARDINO COUNTY
PROJECT & FACILITIES
MANAGEMENT DEPARTMENT

385 N. ARROWHEAD AVE.
SAN BERNARDINO, CA 92415

PROJECT NAME:
SAN BERNARDINO COUNTY FIRE DEPARTMENT:
FIRE STATION 226

PROJECT # 10.10.1032
CIP #21-037
CAFM # SAB198
APN # 0273-011-22

1920 DEL ROSA AVE N.
SAN BERNARDINO,
CA 92404

ISSUE INFORMATION:

DATE:	INFORMATION:
04-11-2022	20% CD SET
04-28-2022	50% CD SET
06-15-2022	95% CD SET
09-16-2022	95% CD- 3rd BAY
10-03-2022	PLAN CHECK

SHEET INFORMATION:
STK PROJECT NO.: 374-154-21
SCALE: AS NOTED
DATE: JANUARY 2021
PLOT DATE: –
DRAWING NAME:

SEAL:
LICENSED ARCHITECT ANTONIO FINO No. C31476 REN. 07-31-23 STATE OF CALIFORNIA

SHEET TITLE:
DOOR & WINDOW DETAILS

SHEET NO.:
A2.4

J:\374-SANPAD\374-154-21-SBC Fire Station No. 226\Architecture\A2.4- DOOR AND WINDOW DETS.dwg
06/30/2022 4:43 PM

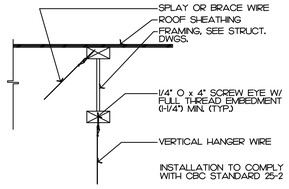

DETAIL — SCALE: 6"=1'-0" — 7

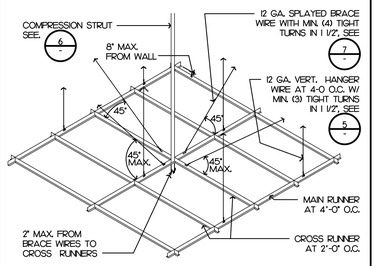

SCALE: 3"=1'-0" — 2

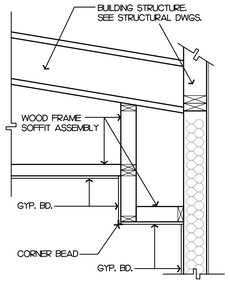

SOFFIT DETAIL — SCALE: 3/4"=1'-0" — 8

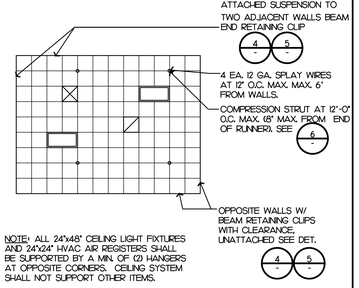

CEILING SYSTEM PLAN — SCALE: 1/8"=1'-0" — 3

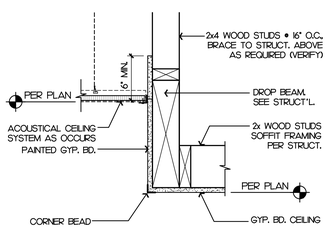

SOFFIT DETAIL — SCALE: 3/4"=1'-0" — 9

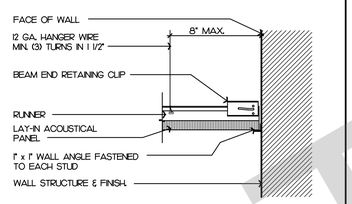

GRID BEAM END — SCALE: 1-1/2"=1'-0" — 4

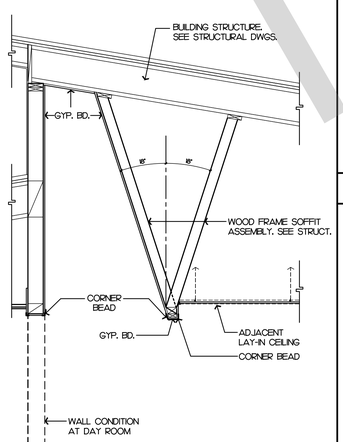

SOFFIT DETAIL — SCALE: 1/2"=1'-0" — 10

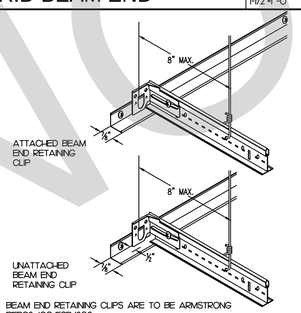

BERC DETAIL — SCALE: N.T.S. — 5

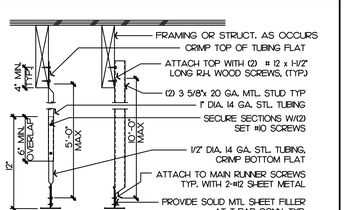

INSTALLATION TO COMPLY WITH CBC STANDARD 25-2

SUSPENDED DETAIL — SCALE: 1-1/2"=1'-0" — 6

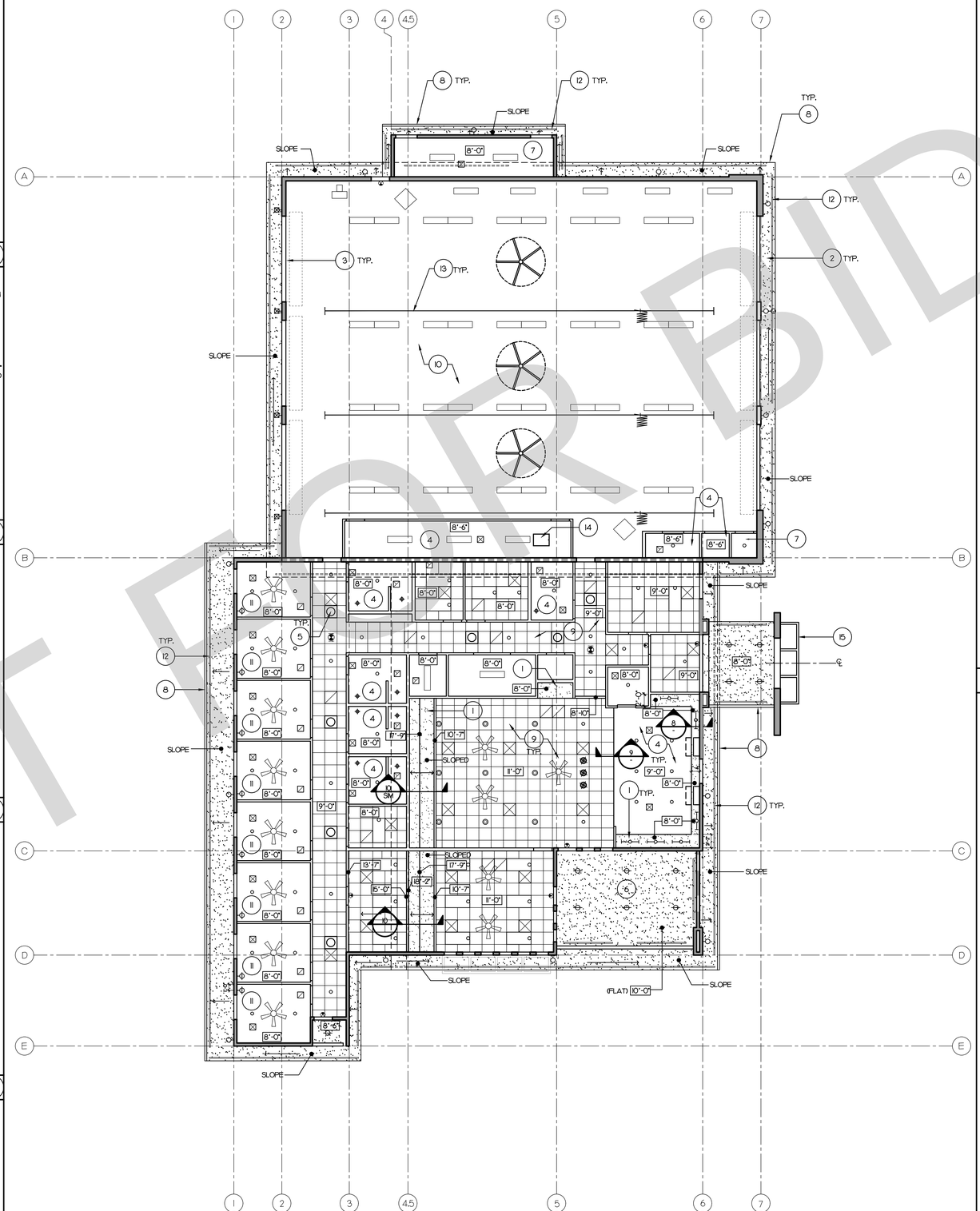

REFLECTED CEILING PLAN — SCALE: 1/8"=1'-0" — 1

NOT FOR BID

KEY NOTE

1. GYP. BD. SOFFIT OVER 2x FRAMING @ 24" O.C.
2. CEMENT PLASTER / SLOPED CEILING.
3. OVERHEAD COILING DOOR - TYP. OF 4.
4. GYP. BOARD CEILING W/ CONTROL JOINT.
5. TUBULAR SKYLIGHT - TYP. OF 7.
6. CEMENT PLASTER / FLAT CEILING OVER PLYWOOD & ROOF INSULATION.
7. OPEN TO STRUCTURE.
8. GALV. SHEET METAL GUTTER & DOWNSPOUT.
9. 2x2 LAY IN CEILING TILE
10. EXPOSED INSULATION ON CEILING. PAINT EXPOSED STRUCTURE AND MPE SYSTEMS, ETC.
11. 1/2 HOUR RATED GYPSUM BOARD CEILING. PROVIDE DAMPERS AT AC REGISTERS. PROVIDE FIRE RATED RECESSED LIGHT FIXTURE ENCLOSURES. SEE MECH. AND ELECT. SEE 1A/A2.1 FOR U.L. ASSEMBLY.
12. CONTINUOUS 2" EAVE SOFFIT VENT.
13. VEHICLE EXHAUST SYSTEM. REFER TO MECH.
14. 22x30 ACCESS PANEL FOR ALERT SYSTEMS.
15. STEEL AWNING. LOCATE AT CENTER OF OPENING.

SYMBOL LEGEND

- 1' x 4' SURFACE MOUNTED FLUORESCENT FIXTURE
- 2' x 4' LAY IN RECESSED LED LIGHT FIXTURE
- 2' x 2' LAY IN RECESSED LED LIGHT FIXTURE
- RECESSED DOWN LIGHT FIXTURE
- RECESSED DOWN LIGHT FIXTURE ON DIMMER SWITCH
- SURFACE MOUNTED FIXTURE UNDER CABINET. (NOTE: NO EXPOSED CONDUIT, USE ELECT. WIRING WHIP)
- WALL MOUNTED READING LIGHT FIXTURE AT +5'-0" A.F.F.
- PENDANT LIGHT FIXTURE
- EXTERIOR RECESSED DOWN LIGHT FIXTURE
- EXTERIOR WALL LIGHT FIXTURE
- EXTERIOR WALL MOUNTED AREA LIGHT
- EXIT SIGN
- SUPPLY AIR REGISTER
- RETURN AIR REGISTER
- EXHAUST FAN
- TUBULAR SKYLIGHT
- CEILING FAN MANUFACTURE: MINKA AIRE MODEL F786-WHF 44", EXT. RATED WALL CONTROL-WC400 INSTALL AT 7'-0" A.F.F CLEARANCE MIN.
- LARGE FORMAT CEILING FAN

STK
42095 ZEVO DR., TEMECULA, CALIFORNIA 92590-3780
Phone: 951.296.9110 Fax: 951.296.6079 Email: stk@stkinc.com

CONSULTANT:

PROJECT ADMINISTERED BY:
SAN BERNARDINO COUNTY PROJECT & FACILITIES MANAGEMENT DEPARTMENT

385 N. ARROWHEAD AVE.
SAN BERNARDINO, CA 92415

PROJECT NAME:
SAN BERNARDINO COUNTY FIRE DEPARTMENT:
FIRE STATION 226

PROJECT # 10.0.0.032
CIP #21-037
CAFM # SAB198
APN # 0273-011-22

1920 DEL ROSA AVE N.
SAN BERNARDINO,
CA 92404

ISSUE INFORMATION:

DATE:	INFORMATION:
04-11-2022	20% CD SET
04-28-2022	50% CD SET
06-15-2022	95% CD SET
09-16-2022	95% CD- 3rd BAY
10-03-2022	PLAN CHECK

SHEET INFORMATION:
STK PROJECT NO.: 374-154-21
SCALE: AS NOTED
DATE: JANUARY 2021
PLOT DATE: –
DRAWING NAME:

SEAL:
LICENSED ARCHITECT ANTONIO FINAZZI No. C31476 REN. 07-31-23 STATE OF CALIFORNIA

SHEET TITLE:
REFLECTED CEILING PLAN & DETAILS

SHEET NO.:
A2.5

J:\374-SANBRNRDSO\374-154-21 SBC Fire Station No. 226\Architecture\A2.5 - REFLECTED CEILING PLAN & DETAILS.dwg
10/03/2022 8:30AM

NOT FOR BID

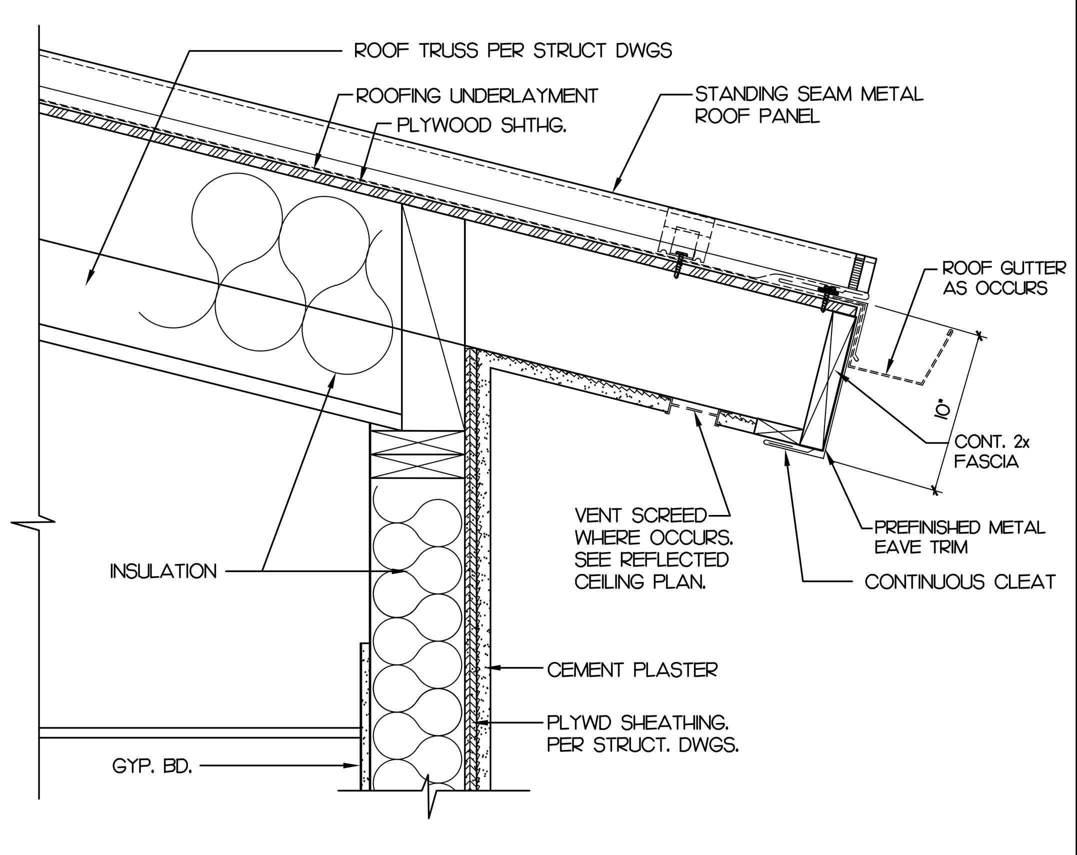

ROOF EAVE | SCALE: 1 1/2"=1'-0" | 13

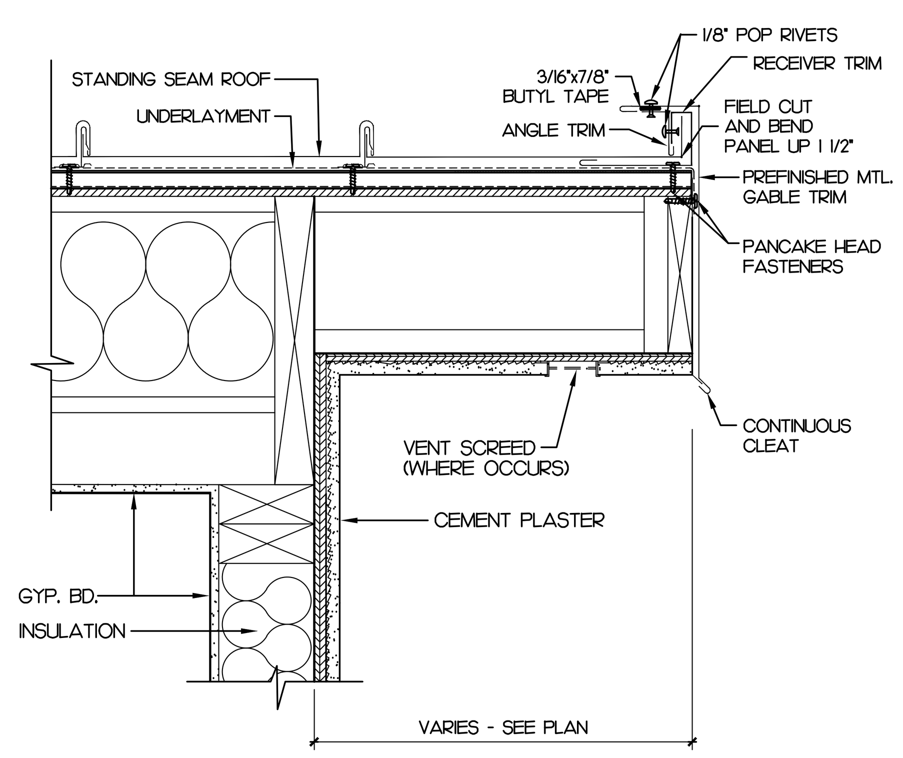

ROOF RAKE | SCALE: 1 1/2"=1'-0" | 14

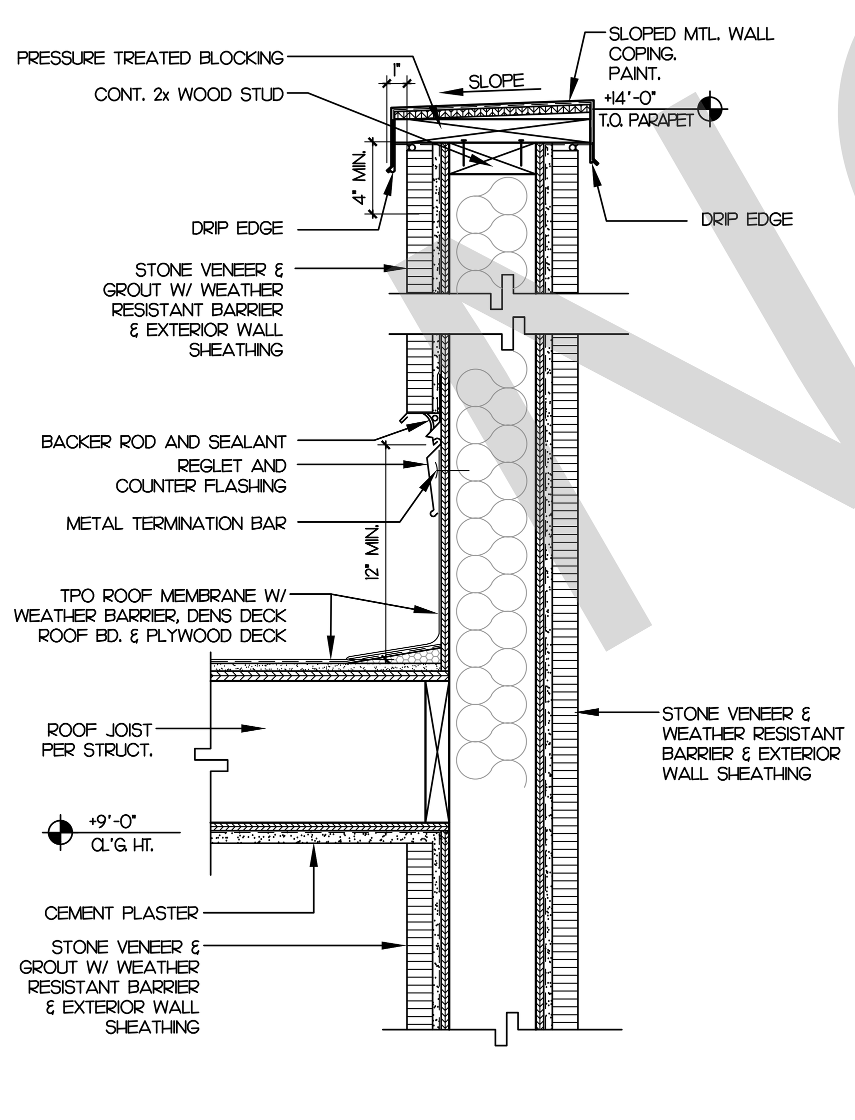

ENTRY WALL | SCALE: 1 1/2"=1'-0" | 16

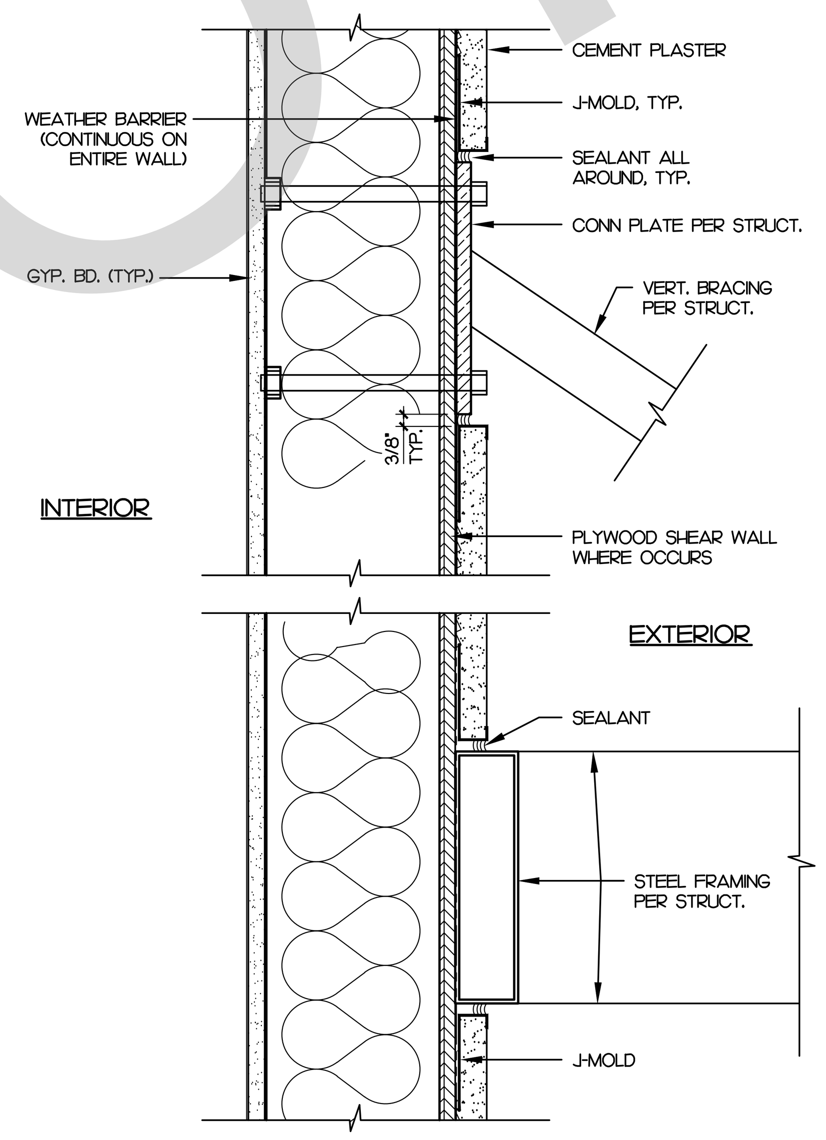

CANOPY TO WALL FLASHING | SCALE: 1 1/2"=1'-0" | 12

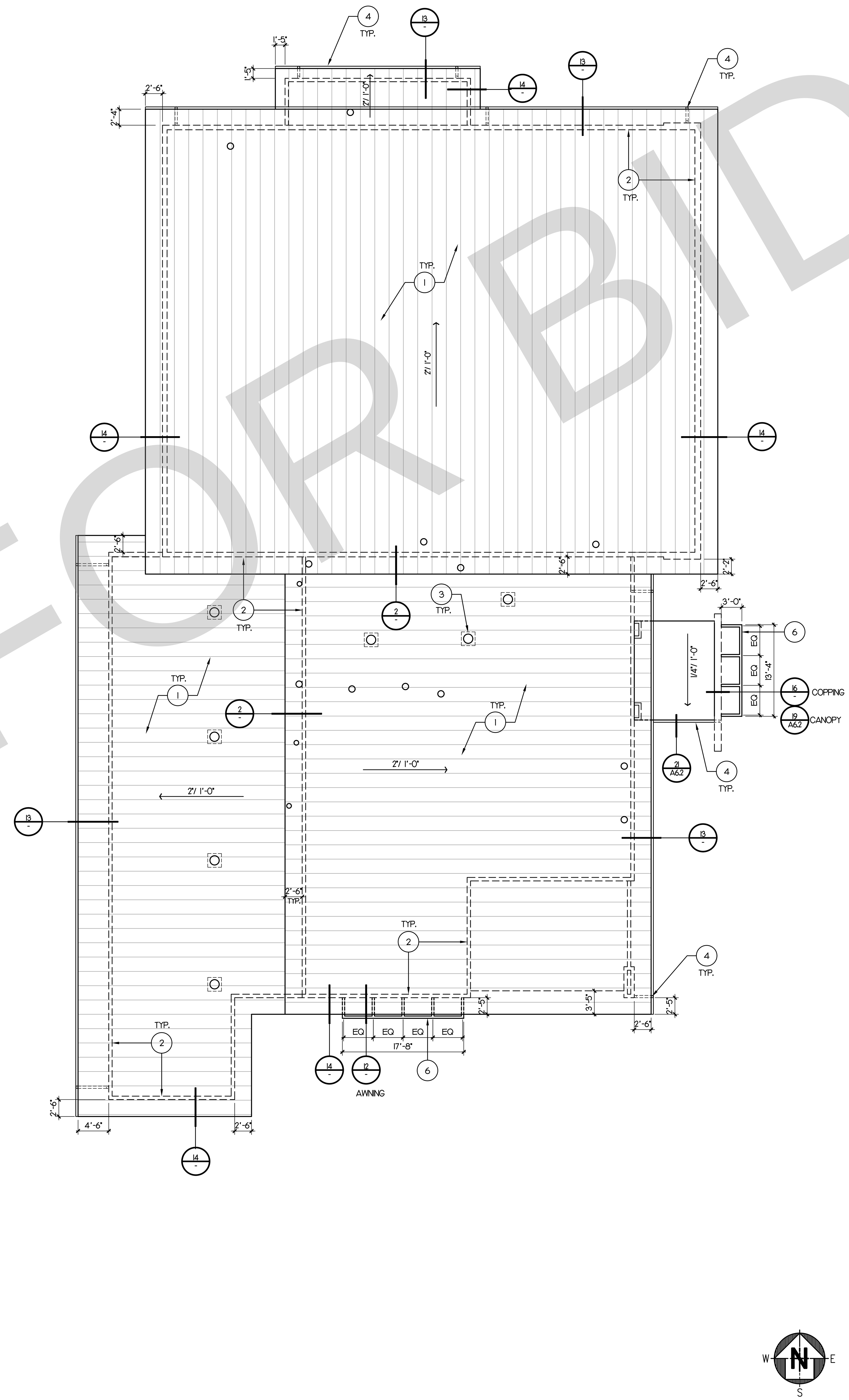

ROOF PLAN | SCALE: 1/8"=1'-0" | 4

KEY NOTE

1. STANDING SEAM METAL ROOF OVER PLYWOOD SHEATHING WITH RADIANT BARRIER.
2. WALL LINE BELOW SHOWN DASHED.
3. TUBULAR SKYLIGHT - TYP. OF 7.
4. GALV. SHEET METAL GUTTER AND DOWNSPOUT, DOWN FROM EXTERIOR WALL OR SPILL UNDER CONC. SLAB TO LANDSCAPE. PAINT.
5. DUCT ROOF CAP. SEE MECH'L.
6. STEEL AWNING. PAINT.

STK ARCHITECTURE, INC.
42095 ZEVO DR., TEMECULA, CALIFORNIA 92590-3780
Phone: 951.296.9110 Fax: 951.296.6079 Email: stk@stkinc.com

CONSULTANT:

PROJECT ADMINISTERED BY:
SAN BERNARDINO COUNTY PROJECT & FACILITIES MANAGEMENT DEPARTMENT

385 N. ARROWHEAD AVE.
SAN BERNARDINO, CA 92415

PROJECT NAME:
SAN BERNARDINO COUNTY FIRE DEPARTMENT:
FIRE STATION 226

PROJECT # 10.10.1032
CIP #21-037
CAFM # SAB198
APN # 0273-011-22

1920 DEL ROSA AVE N.
SAN BERNARDINO,
CA 92404

ISSUE INFORMATION:

DATE:	INFORMATION:
04-11-2022	20% CD SET
04-28-2022	50% CD SET
06-15-2022	95% CD SET
09-16-2022	95% CD- 3rd BAY
10-03-2022	PLAN CHECK

SHEET INFORMATION:
STK PROJECT NO.: 374-154-21
SCALE: AS NOTED
DATE: JANUARY 2021
PLOT DATE: –
DRAWING NAME:

SEAL:
LICENSED ARCHITECT ANTONIO FINALDI No. C31476 REN. 07-31-23 STATE OF CALIFORNIA

SHEET TITLE:
ROOF PLAN & DETAILS

SHEET NO.:
A2.6

10/03/2022 8:36AM J:\374-SANPMD\374-154-21 SBC Fire Station No. 226\Architectural\A2.6- ROOF PLAN & DETAILS.dwg

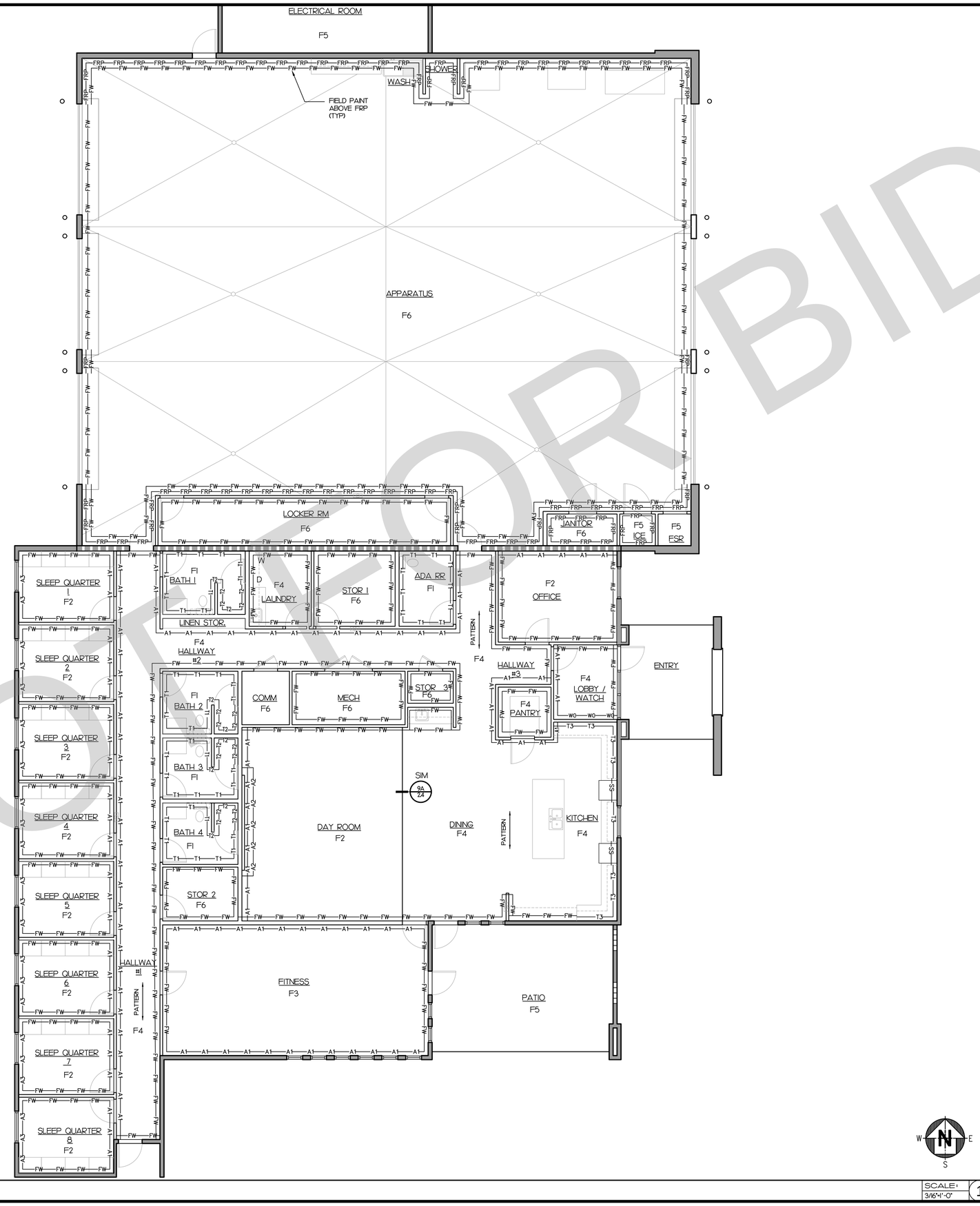

NOT FOR BID

FINISH FLOOR PLAN

SCALE: 3/16"=1'-0" 1

FINISH LEGEND

INTERIOR FINISHES:

FLOOR FINISHES:

- F1 CERAMIC TILE OVER FULL MORTAR BED
- F2 CARPET TILE
- F3 RESILIENT ATHLETIC FLOORING
- F4 LUXURY VINYL TILE
- F5 EXPOSED CONCRETE, MEDIUM BROOM
- F6 EXPOSED CONCRETE, SMOOTH TROWEL FINISH (SEALED)

WALL FINISHES:

WALL PAINT

- FW — FIELD
- A1 — ACCENT 1
- A2 — ACCENT 2
- A3 — ACCENT 3
- WG — WALLCOVER GRAPHICS

WALL TILE
4"x12" SLEWAY TILE, STACKED BOND

- T1 — 4FT HT.
- T2 — FULL HT.
- T3 — AS SHOWN IN KITCHEN ELEV.
- SS — STAINLESS STEEL BEHIND RANGE UP TO UNDERSIDE OF HOOD AND ON SIDES OF BASE CABINETS.
- FRP — SANITARY WALL PANEL FROM +6' TO +8'-6" AFF.

NOTE:

REFER TO SHEET A2.3 FOR THE FINISH SCHEDULE AND A3.2 FOR EXTERIOR ELEVATION FINISHES.

STK
42095 ZEVO DR., TEMECULA, CALIFORNIA 92590-3780
Phone: 951.296.9110 Fax: 951.296.6079 Email: stk@stkinc.com

CONSULTANT:

PROJECT ADMINISTERED BY:
SAN BERNARDINO COUNTY
PROJECT & FACILITIES
MANAGEMENT DEPARTMENT

385 N. ARROWHEAD AVE.
SAN BERNARDINO, CA 92415

PROJECT NAME:

SAN BERNARDINO
COUNTY FIRE
DEPARTMENT:

FIRE STATION 226

PROJECT # 10.010.032

CIP #21-037

CAFM # SAB198

APN # 0273-011-22

1920 DEL ROSA AVE N.
SAN BERNARDINO,
CA 92404

ISSUE INFORMATION:

DATE:	INFORMATION:
04-11-2022	20% CD SET
04-28-2022	50% CD SET
06-15-2022	95% CD SET
09-16-2022	95% CD- 3rd BAY
10-03-2022	PLAN CHECK

SHEET INFORMATION:

STK PROJECT NO.: 374-154-21
SCALE: AS NOTED
DATE: JANUARY 2021
PLOT DATE: –
DRAWING NAME:

SEAL:

LICENSED ARCHITECT
ANTONIO FINALDI
No. C31476
REN. 07-31-23
STATE OF CALIFORNIA

SHEET TITLE:

FINISH FLOOR PLAN

SHEET NO.:

A2.7

J:\374-SAN#NEW\374-154-21 SBC Fire Station no. 226\Architecture\A2.7 - FINISH FLOOR PLAN.dwg
10/03/2022 8:21AM

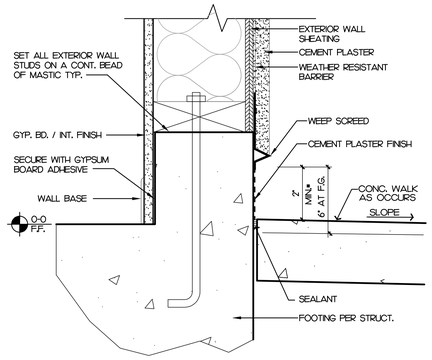

DETAIL SCALE: 3"=1'-0" 5

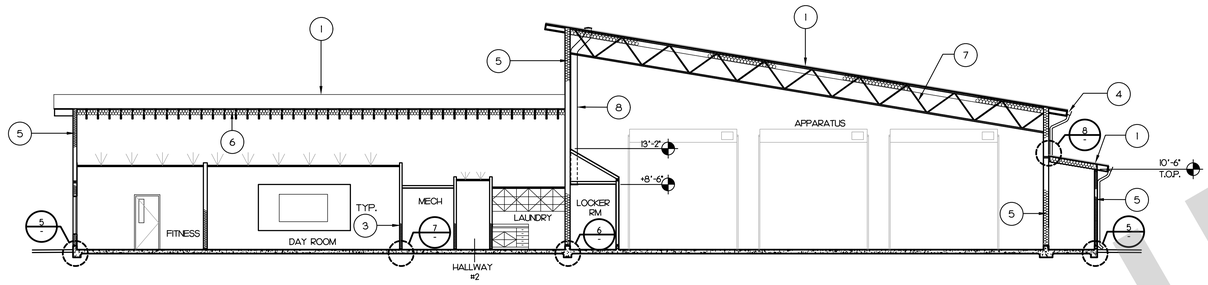

SECTION SCALE: 1/8"=1'-0" 1

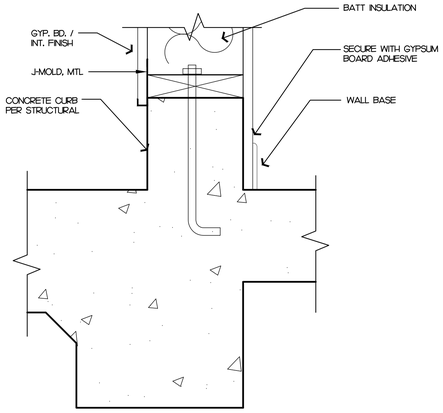

DETAIL SCALE: 3"=1'-0" 6

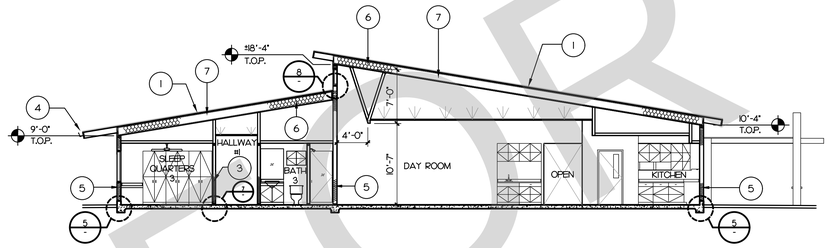

SECTION SCALE: 1/8"=1'-0" 2

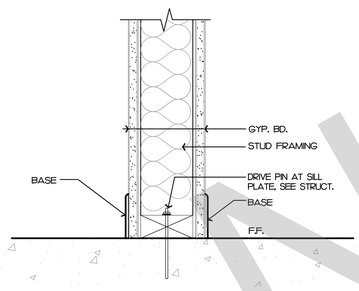

DETAIL SCALE: 3"=1'-0" 7

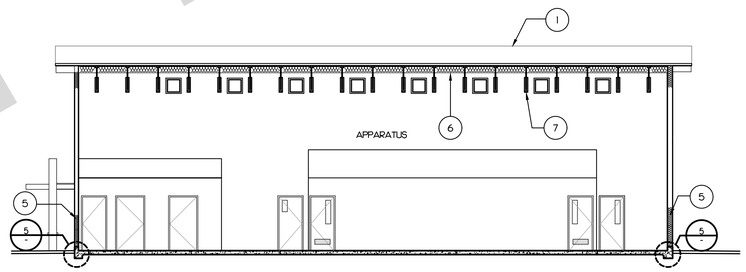

SECTION SCALE: 1/8"=1'-0" 3

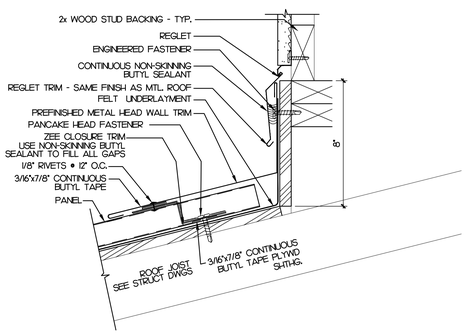

DETAIL SCALE: 3"=1'-0" 8

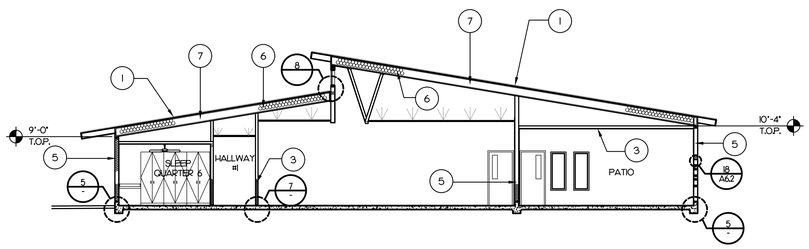

SECTION SCALE: 1/8"=1'-0" 4

KEY NOTE

1. STANDING SEAM METAL ROOF
2. CEMENT PLASTER CEILING.
3. SOUND INSULATION. TYP. ALL INTERIOR WALLS.
4. SHEET METAL GUTTER AND DOWNSPOUT. PAINT.
5. R-21 WALL INSULATION. TYP. ALL EXTERIOR WALLS.
6. R-38 ROOF INSULATION.
7. BUILDING STRUCTURE. SEE STRUCTURAL DRAWINGS.
8. DUCT UP THRU ROOF TO ROOF CAP. BRACE TO WALL. SEE MECHANICAL DRAWINGS.

STK
42095 ZEVO DR., TEMECULA, CALIFORNIA 92590-3780
Phone: 951.296.9110 Fax: 951.296.6079 Email: stk@stkinc.com

CONSULTANT:

PROJECT ADMINISTERED BY:
SAN BERNARDINO COUNTY PROJECT & FACILITIES MANAGEMENT DEPARTMENT

385 N. ARROWHEAD AVE.
SAN BERNARDINO, CA 92415

PROJECT NAME:
SAN BERNARDINO COUNTY FIRE DEPARTMENT:
FIRE STATION 226

PROJECT # 10.0.0.032
CIP #21-037
CAFM # SAB198
APN # 0273-011-22

1920 DEL ROSA AVE N.
SAN BERNARDINO,
CA 92404

ISSUE INFORMATION:

DATE:	INFORMATION:
04-11-2022	20% CD SET
04-28-2022	50% CD SET
06-15-2022	95% CD SET
09-16-2022	95% CD- 3rd BAY
10-03-2022	PLAN CHECK

SHEET INFORMATION:
STK PROJECT NO.: 374-154-21
SCALE: AS NOTED
DATE: JANUARY 2021
PLOT DATE: –
DRAWING NAME:

SEAL:
LICENSED ARCHITECT ANTONIO FINAU No. C31476 REN. 07-31-23 STATE OF CALIFORNIA

SHEET TITLE:
BUILDING SECTIONS & DETAILS

SHEET NO.:
A3.1

NOT FOR BID

J:\374-SAN#NDO\374-154-21 SBC Fire Station No. 226\Architect\sheet\A3.1-BUILDING SECTIONS & DETAILS.dwg
10/03/2022 8:31 AM

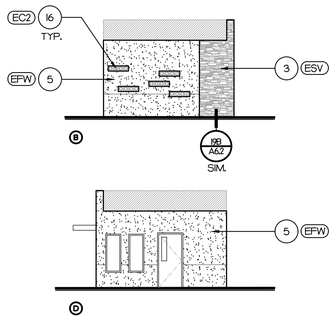

PATIO ELEVATION — SCALE: 1/8"=1'-0" — 5

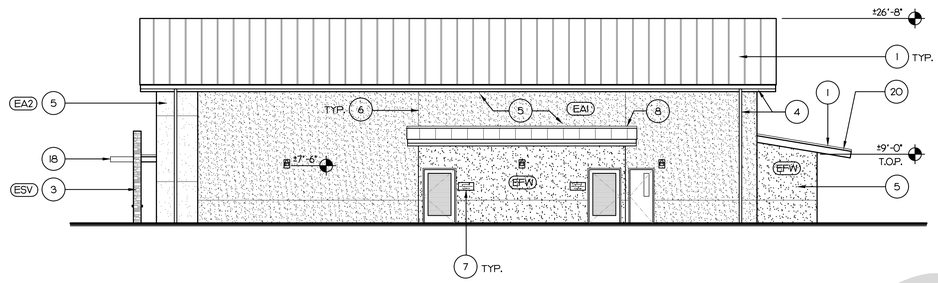

NORTH ELEVATION — SCALE: 1/8"=1'-0" — 1

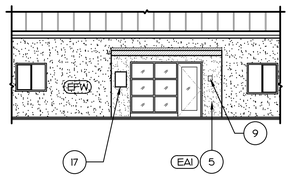

ENTRY ELEVATION — SCALE: 1/8"=1'-0" — 6

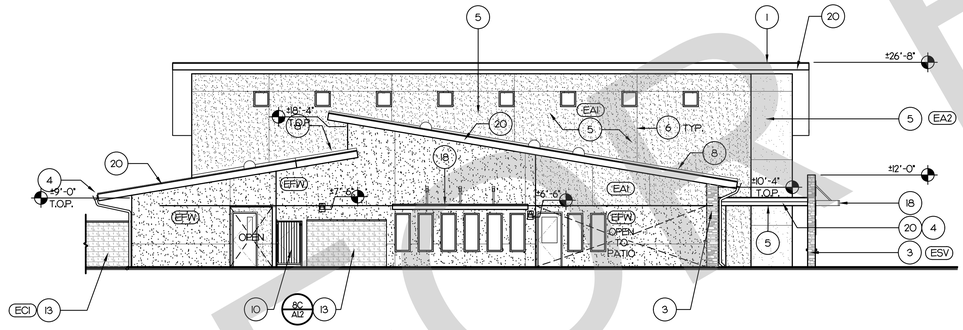

SOUTH ELEVATION — SCALE: 1/8"=1'-0" — 2

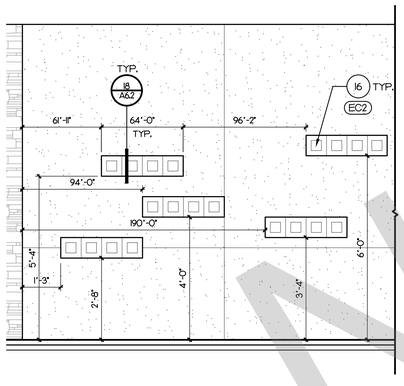

ENLARGED ELEVATION — SCALE: 1/2"=1'-0" — 7

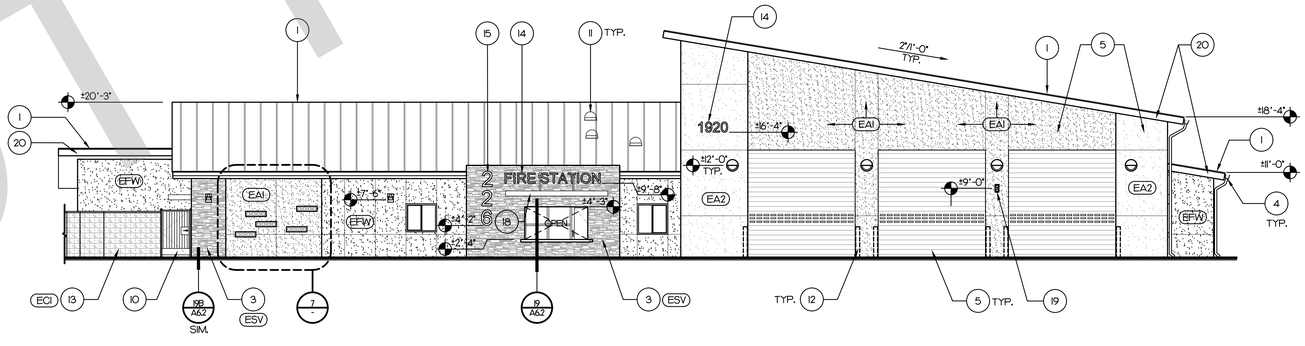

EAST ELEVATION — SCALE: 1/8"=1'-0" — 3

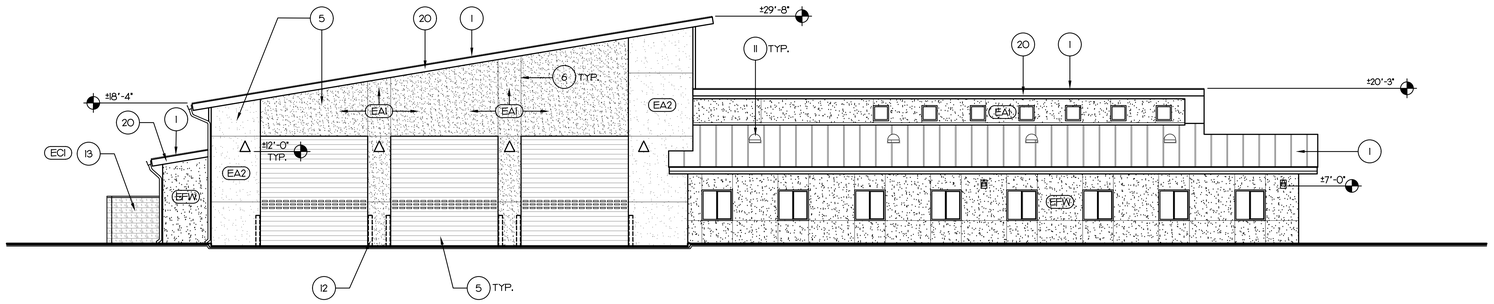

WEST ELEVATION — SCALE: 1/8"=1'-0" — 4

KEY NOTE

1. STANDING SEAM METAL ROOF.
2. OVERHEAD COILING DOOR. TYP. OF 2
3. STONE VENEER.
4. GALV. SHEET METAL GUTTER AND SURFACE MOUNTED DOWNSPOUT, PAINT.
5. CEMENT PLASTER.
6. CEMENT PLASTER CONTROL JOINT. SEE 2/A2
7. 6"X12" SIGN THAT READS "ELECTRICAL ROOM" WITH 3" X 3/4" STROKE LETTERS WITH CONTRASTING WHITE REFLECTIVE BACKGROUND. SIGN SHALL ALSO STATE: "THIS BUILDING IS SUPPLIED BY AN ON-SITE GENERATOR IN THE BACK PARKING AREA".
8. SHEET METAL FLASHING. PAINT TO MATCH ADJACENT PLASTER CEMENT. SEE 8/A3.1
9. KNOX BOX LOCATED PER FIRE DEPARTMENTS DIRECTION.
10. METAL PERSONNEL GATE .
11. TUBULAR SKYLIGHT
12. CONC. FILLED PIPE BOLLARD. PAINT O.S.H.A. YELLOW. SEE 7/A1.2
13. 6'-0" HIGH CMU WALL WITH 2" CONC. CAP.
14. 12" CAST NUMBERS & LETTERS.
15. 24" CAST NUMBERS.
16. 8x8 MASONRY SCREEN BLOCK
17. DEDICATION PLAQUE. SEE 17/A6.1
18. STEEL AWNING. PAINT.
19. RED AND GREEN LIGHT. SEE ELECT'L.
20. METAL FASCIA

EXTERIOR FINISHES

EFW	STUCCO WALL- FIELD OMEGA, COLORTREK, 432 MILKY QUARTZ, BASE 10
EA1	STUCCO WALL- ACCENT 1 OMEGA, COLORTREK, 69 TRUE GRAY, BASE 2
EA2	STUCCO WALL- ACCENT 2 (DARK) OMEGA, COLORTREK, 412 BISON BEIGE, BASE 2
ESV	STONE VENEER
ECI	8x8x16 CMU WALL
EC2	8x8x4(D) BREEZE BLOCK

STK
42095 ZEVO DR., TEMECULA, CALIFORNIA 92590-3780
Phone: 951.296.9110 Fax: 951.296.6079 Email: stk@stkinc.com

CONSULTANT:

PROJECT ADMINISTERED BY:
SAN BERNARDINO COUNTY
PROJECT & FACILITIES
MANAGEMENT DEPARTMENT

385 N. ARROWHEAD AVE.
SAN BERNARDINO, CA 92415

PROJECT NAME:
SAN BERNARDINO COUNTY FIRE DEPARTMENT:
FIRE STATION 226

PROJECT # 10.0.0.032
CIP #21-037
CAFM # SAB198
APN # 0273-011-22

1920 DEL ROSA AVE N.
SAN BERNARDINO,
CA 92404

ISSUE INFORMATION:

DATE:	INFORMATION:
04-11-2022	20% CD SET
04-28-2022	50% CD SET
06-15-2022	95% CD SET
09-16-2022	95% CD- 3rd BAY
10-03-2022	PLAN CHECK

SHEET INFORMATION:
STK PROJECT NO.: 374-154-21
SCALE: AS NOTED
DATE: JANUARY 2021
PLOT DATE: –
DRAWING NAME:

SEAL:
LICENSED ARCHITECT ANTONIO FINALDI No. C31476 REN. 07-31-23 STATE OF CALIFORNIA

SHEET TITLE:
EXTERIOR ELEVATIONS

SHEET NO.:
A3.2

NOT FOR BID

J:\374-SANPAR\374-154-23 SBC Fire Station No. 226\Architecture\A3.2 - EXTERIOR ELEVATIONS.dwg
10/03/2022 8:39AM

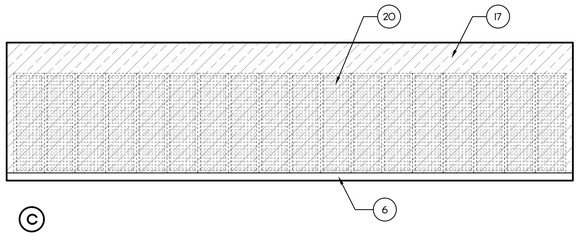

LOCKER ROOM

SCALE: 1/4"=1'-0" 2

NOT USED

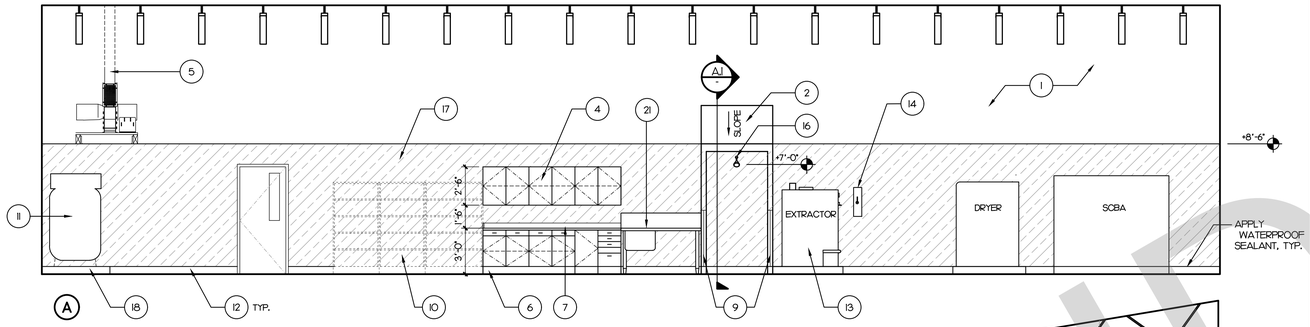

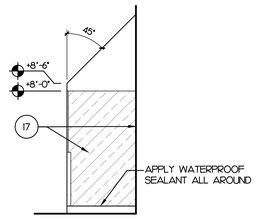

A.1 AT SHOWER

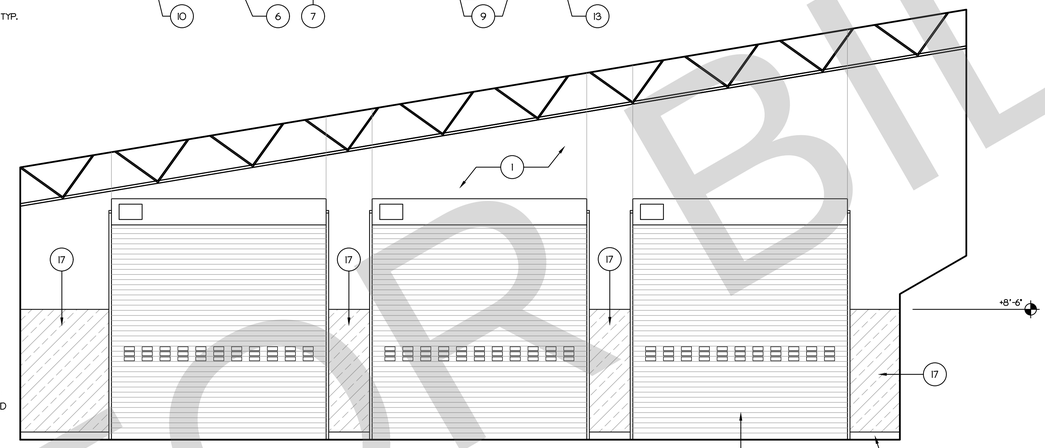

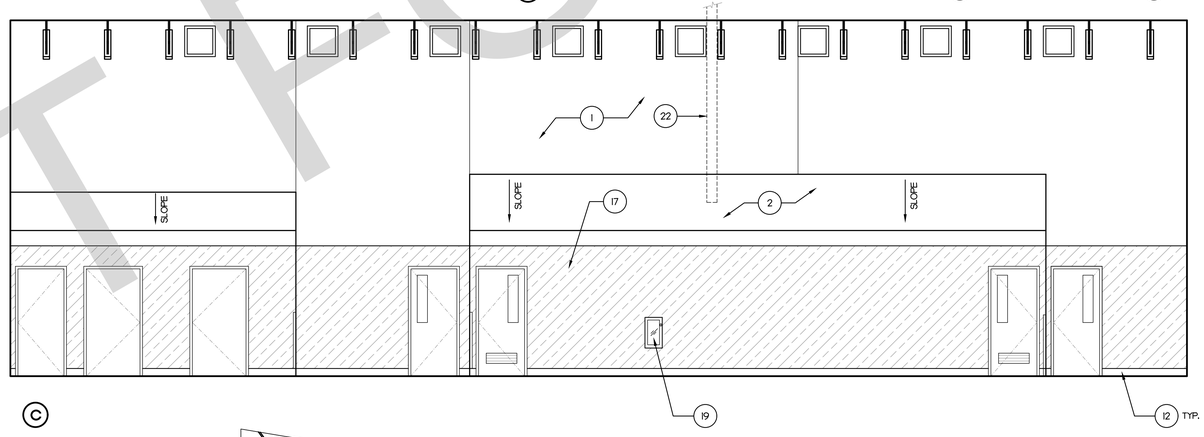

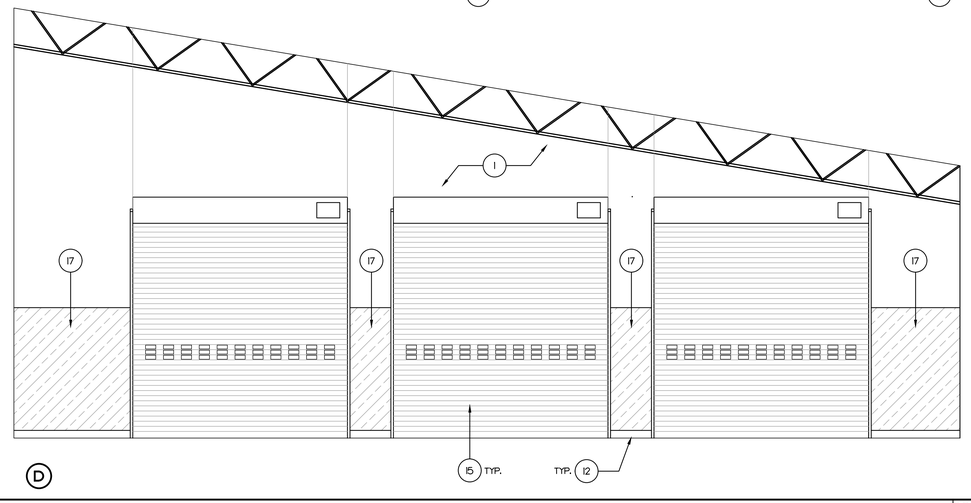

INTERIOR ELEVATION- APPARATUS

SCALE: 1/4"=1'-0" 1

KEY NOTE

1. GYPSUM BOARD. PAINT.
2. SLOPED GYPSUM BOARD SOFFIT OR WALL.
3. GYPSUM BOARD CONTROL JOINT. SEE 6/A6.1
4. PLASTIC LAMINATE CABINETS W/ ADJUSTABLE SHELVING (TYP.)
5. VEHICLE EXHAUST SYSTEM WITH MOTOR & SHELF.
6. 6" CONCRETE CURB.
7. STAINLESS STEEL COUNTER.
8. STAINLESS STEEL SINK WITH DRAINBOARD. SEE PLUMBING DWGS.
9. STAINLESS STEEL CORNER GUARD.
10. METAL SHELVING BY OWNER.
11. AIR COMPRESSOR ON +6" CONC. PAD
12. 6" CONC. CURB WITH SEALER.
13. EXTRACTOR - PROVIDE CONCRETE PAD AS REQUIRED.
14. EXTRACTOR DISCONNECT.
15. OVER-HEAD COILING DOOR. SEE 3/A2.4
16. EMERGENCY SHOWER HEAD. SEE PLUMBING.
17. SANITARY WALL PANEL, FROM +6" AFF. TO +8'-6" AFF.
18. 6" CONCRETE PAD.
19. FIRE EXTINGUISHER CABINET. SEE 20/A6.2
20. WALL MOUNTED METAL MESH LOCKERS. MOUNT PER MFG. RECOMMENDATIONS.
21. STAINLESS STEEL SINK WITH DRAINBOARD. SEE PLUMBING DWGS.
22. EXHAUST THRU ROOF. SEE MECHANICAL DWGS.

NOT FOR BID

STK
42095 ZEVO DR., TEMECULA, CALIFORNIA 92590-3780
Phone: 951.296.9110 Fax: 951.296.6079 Email: stk@stkinc.com

CONSULTANT:

PROJECT ADMINISTERED BY:
SAN BERNARDINO COUNTY
PROJECT & FACILITIES
MANAGEMENT DEPARTMENT

385 N. ARROWHEAD AVE.
SAN BERNARDINO, CA 92415

PROJECT NAME:
SAN BERNARDINO
COUNTY FIRE
DEPARTMENT:
FIRE STATION 226

PROJECT # 10.10.1032
CIP #21-037
CAFM # SAB198
APN # 0273-011-22

1920 DEL ROSA AVE N.
SAN BERNARDINO,
CA 92404

ISSUE INFORMATION:

DATE:	INFORMATION:
04-11-2022	20% CD SET
04-28-2022	50% CD SET
06-15-2022	95% CD SET
09-16-2022	95% CD- 3rd BAY
10-03-2022	PLAN CHECK

SHEET INFORMATION:
STK PROJECT NO.: 374-154-21
SCALE: AS NOTED
DATE: JANUARY 2021
PLOT DATE: –
DRAWING NAME:

SEAL:
LICENSED ARCHITECT ANTONIO FINAZZI No. C31476 REN. 07-31-23 STATE OF CALIFORNIA

SHEET TITLE:
INTERIOR ELEVATIONS

SHEET NO.:
A4.2

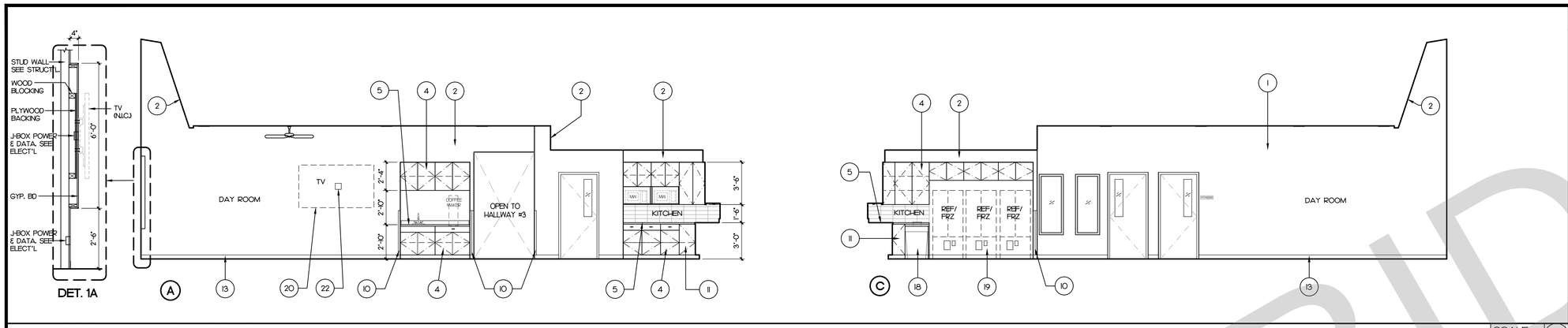

DAYROOM, DINING, KITCHEN — SCALE: 1/4"=1'-0" (1)

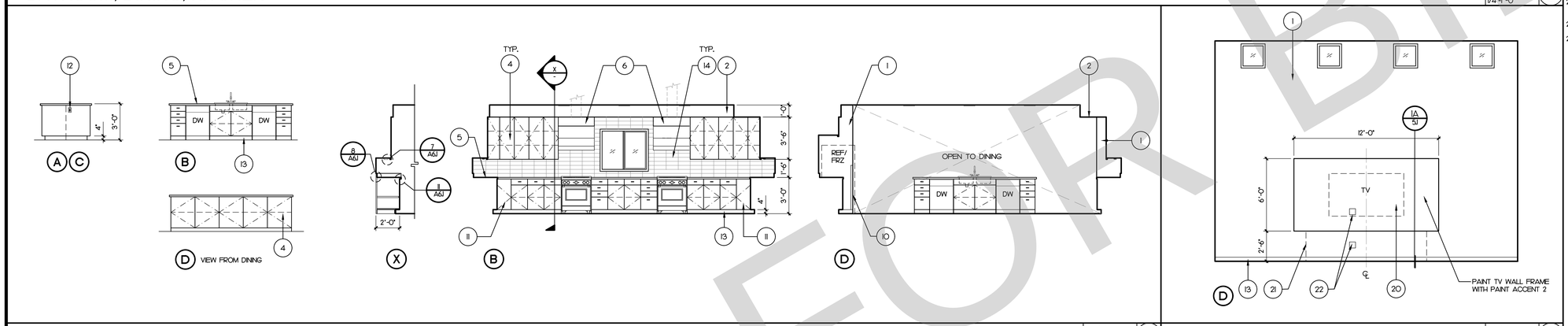

KITCHEN — SCALE: 1/4"=1'-0" (5)

DAYROOM — SCALE: 1/4"=1'-0" (2)

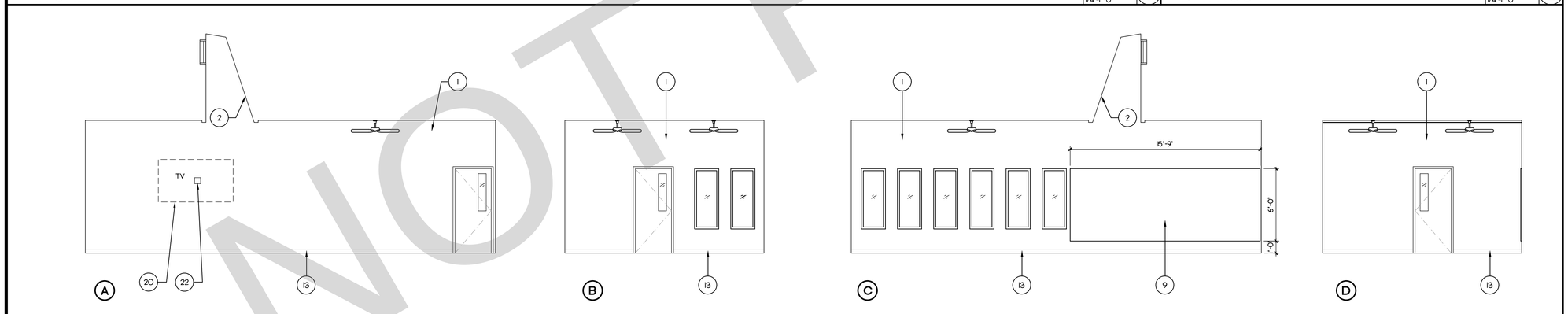

FITNESS — SCALE: 1/4"=1'-0" (3)

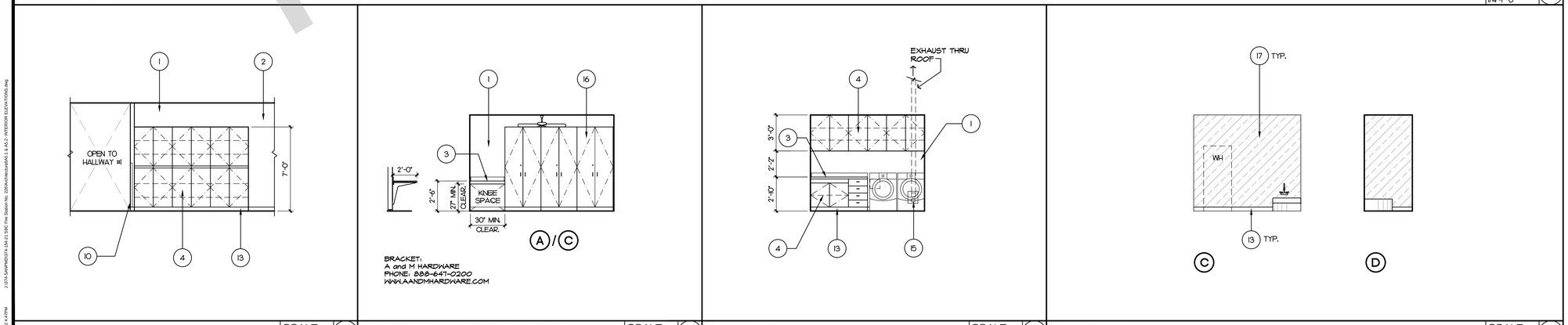

HALLWAY #2 — SCALE: 1/4"=1'-0" (8)

SLEEP QUARTERS - TYP. — SCALE: 1/4"=1'-0" (7)

LAUNDRY — SCALE: 1/4"=1'-0" (6)

JANITOR — SCALE: 1/4"=1'-0" (4)

KEY NOTE

1. GYPSUM BOARD.
2. GYPSUM BOARD SOFFIT
3. PLASTIC LAMINATE COUNTERTOP AND 4" SPLASH.
4. PLASTIC LAMINATE CABINETS w/ ADJUSTABLE SHELVES (TYP.).
5. QUARTZ COUNTERTOP
6. RANGE EXHAUST HOOD. SEE MECH.
7. NOT USED
8. SHOWER HEAD MOUNTED AT 7'-0" A.F.F.
9. MIRROR
10. CORNER GUARDS (PVC).
11. CORNER CABINET WITH LAZY-SUSAN STORAGE UNIT.
12. DUPLEX OUTLET
13. 4" TOP SET BASE.
14. CERAMIC TILE BACKSPLASH.
15. RECESSED 4" DEEP x 8" WIDE x 10" SHEET METAL BOX W/ 4" SQ. UNIT CLEAN OUT DOOR & DRYER EXHAUST OUTLET - PAINT.
16. WARDROBE LOCKERS, SEE X/A6.1
17. SANITARY WALL PANEL.
18. OPEN CABINET FOR TRASH RECEPTACLE. PROVIDE PLASTIC ON INSIDE SURFACE OF OPENING AND CABINET LINER AT UNDERSIDE OF COUNTER. PROVIDE 9" DIA S.S. TRASH CHUTE IN COUNTER.
19. COORDINATE REF/FREEZER WATER AND POWER REQUIREMENTS .
20. TV. PROVIDE WOOD BACKING FOR TV MOUNTING BRACKET/SUPPORT.
21. FURNITURE BY OWNER.
22. J-BOX POWER & DATA. SEE ELECT'L.

NOT FOR BID

STK
42095 ZEVO DR., TEMECULA, CALIFORNIA 92590-3780
Phone: 951.296.9110 Fax: 951.296.6079 Email: stk@stkinc.com

CONSULTANT:

PROJECT ADMINISTERED BY:
SAN BERNARDINO COUNTY
PROJECT & FACILITIES
MANAGEMENT DEPARTMENT

385 N. ARROWHEAD AVE.
SAN BERNARDINO, CA 92415

PROJECT NAME:
SAN BERNARDINO COUNTY FIRE DEPARTMENT:
FIRE STATION 226

PROJECT # 10.0.0.032
CIP #21-037
CAFM # SAB198
APN # 0273-011-22

1920 DEL ROSA AVE N.
SAN BERNARDINO,
CA 92404

ISSUE INFORMATION:

DATE:	INFORMATION:
04-11-2022	20% CD SET
04-28-2022	50% CD SET
06-15-2022	95% CD SET
09-16-2022	95% CD- 3rd BAY
10-03-2022	PLAN CHECK

SHEET INFORMATION:
STK PROJECT NO.: 374-154-21
SCALE: AS NOTED
DATE: JANUARY 2021
PLOT DATE: –
DRAWING NAME:

SEAL:
LICENSED ARCHITECT ANTONIO FINALDI No. C31476 REN. 07-31-23 STATE OF CALIFORNIA

SHEET TITLE:
INTERIOR ELEVATIONS

SHEET NO.:
A5.1

J:\374-SAN#NAD\374-154-11 SBC Fire Station No. 226\Architectural\A5.1 & A5.2- INTERIOR ELEVATIONS.dwg
09/30/2022 4:47PM

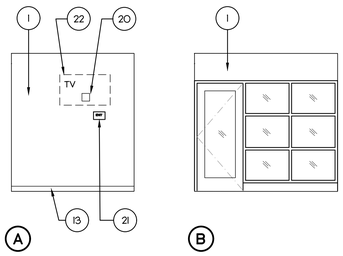

LOBBY/WATCH ELEVATION — SCALE: 1/4"=1'-0" — 17

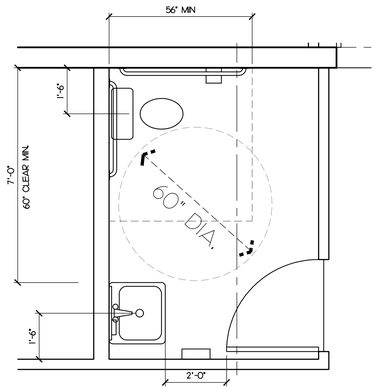

ENLARGED- ADA RESTROOM — SCALE: 1/2"=1'-0" — 13

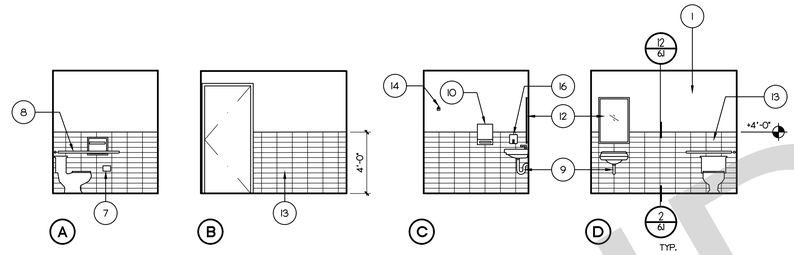

ADA RESTROOM ELEV. — SCALE: 1/4"=1'-0" — 9

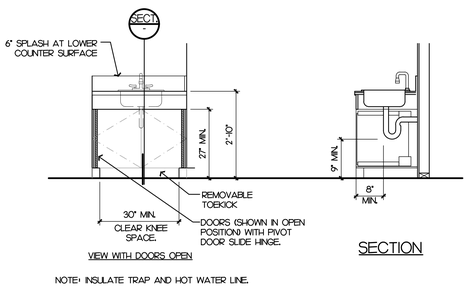

BATH 1- ACCESSIBLE SINK — SCALE: 1/2"=1'-0" — 18

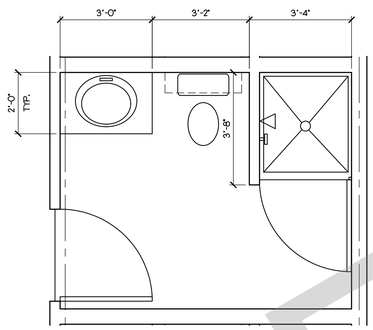

ENLARGED TYPICAL BATH (BATH 2-4 SIM.) — SCALE: 1/2"=1'-0" — 14

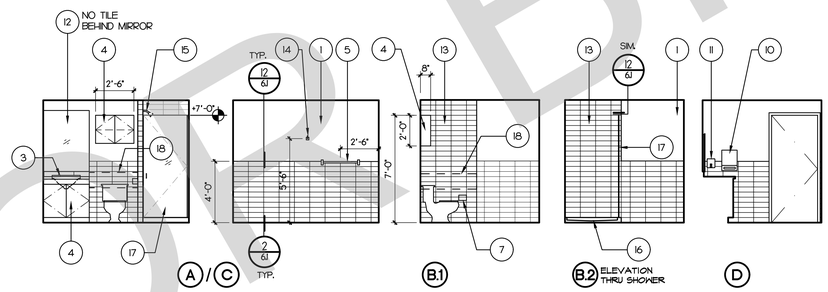

BATH #2 - BATH #4 ELEV. — SCALE: 1/4"=1'-0" — 10

NOTE: INSTALL CONTINUOUS BACKING IN ALL SHOWER WALLS OF ADAPTABLE SHOWER.

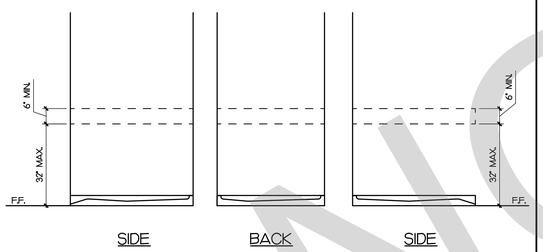

ADAPTABLE SHO. GRAB BAR BACKING — SCALE: 1/2"=1'-0" — 19

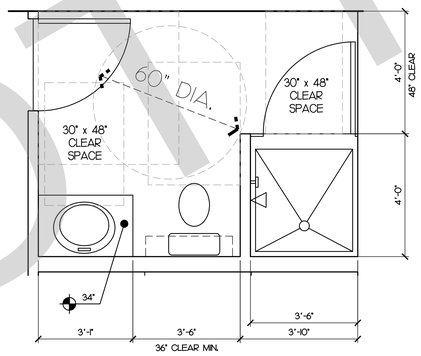

ENLARGED TYPICAL BATH 1 — SCALE: 1/2"=1'-0" — 15

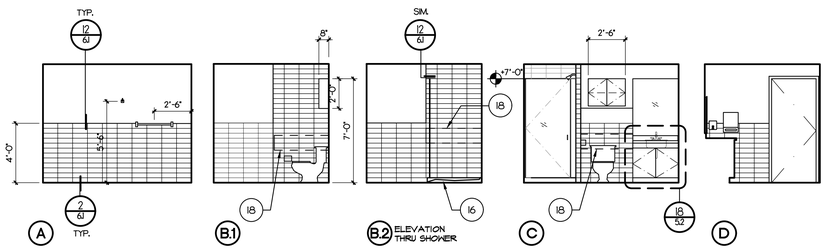

BATH #1 ELEV. — SCALE: 1/4"=1'-0" — 11

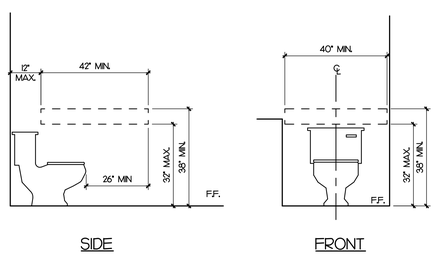

ADAPTABLE WC GRAB BAR BACKING — SCALE: 1/2"=1'-0" — 20

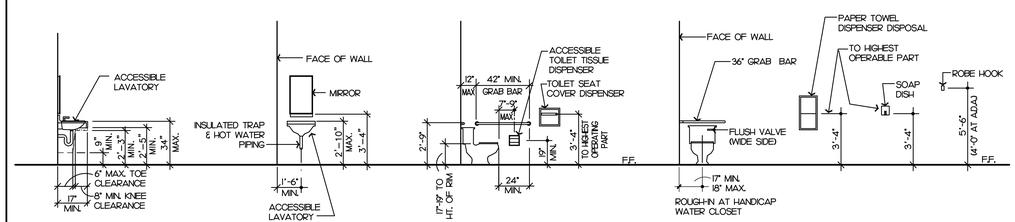

MOUNTING HEIGHTS FOR FIXTURES AND ACCESSORIES — SCALE: 1/4"=1'-0" — 16

	MIRROR	TOILET PAPER DISPENSER	24" TOWEL BAR	36" GRAB BAR	SOAP DISPENSER	36" GRAB BAR	48" GRAB BAR	PAPER TOWEL DISPENSER	REMARKS
ACCESSIBLE BATH	I	I	I	I	-	I	I	I	
BATH #1	I	I	I	I	I	I	-	I	
BATH #2	I	I	I	I	I	I	-	I	
BATH #3	I	I	I	I	I	I	-	I	
BATH #4	I	I	I	I	I	I	-	I	

TOILET ACCESSORIES — SCALE: N/A — 12

KEY NOTE

1. GYPSUM BOARD.
2. GYPSUM BOARD SOFFIT
3. QUARTZ COUNTERTOP w/ 4" BACKSPLASH. PROVIDE 4" MATCHING END SPLASH AS APPLIES.
4. PLASTIC LAMINATE CABINETS w/ ADJUSTABLE SHELVES (TYP.).
5. TOWEL BAR
6. TOILET SEAT COVER DISPENSER.
7. TOILET PAPER DISPENSER.
8. GRAB BARS. SEE DETAIL 5/A6.1
9. INSULATE HOT WATER & DRAIN PIPING.
10. PAPER TOWEL DISPENSER.
11. SOAP DISPENSER.
12. MIRROR
13. CERAMIC TILE OVER CEMENT BOARD W/ TRIM.
14. ROBE HOOK. MOUNT STANDARD AT 5'-6" A.F.F. MOUNT A.D.A. AT 4'-0" A.F.F.
15. SHOWER HEAD MOUNTED AT 7'-0" A.F.F.
16. SHOWER RECEPTOR
17. 3' WIDE GLASS SHOWER DOOR
18. PROVIDE BACKING AS REQUIRED. NO ADDED COST TO OWNER. SEE 3/A6.1
19. BARRIER-FREE SHOWER RECEPTOR
20. TV. PROVIDE WOOD BACKING FOR TV MOUNTING BRACKET/SUPPORT.
21. TACTILE EXIT SIGN.
22. J-BOX POWER & DATA. SEE ELECT'L.

STK
42095 ZEVO DR., TEMECULA, CALIFORNIA 92590-3780
Phone: 951.296.9110 Fax: 951.296.6079 Email: stk@stkinc.com

CONSULTANT:

PROJECT ADMINISTERED BY:
SAN BERNARDINO COUNTY
PROJECT & FACILITIES
MANAGEMENT DEPARTMENT

385 N. ARROWHEAD AVE.
SAN BERNARDINO, CA 92415

PROJECT NAME:
SAN BERNARDINO COUNTY FIRE DEPARTMENT:
FIRE STATION 226

PROJECT #: 10.10.10.032
CIP #21-037
CAFM #: SAB198
APN #: 0273-011-22

1920 DEL ROSA AVE N.
SAN BERNARDINO,
CA 92404

ISSUE INFORMATION:

DATE:	INFORMATION:
04-11-2022	20% CD SET
04-28-2022	50% CD SET
06-15-2022	95% CD SET
09-16-2022	95% CD- 3rd BAY
10-03-2022	PLAN CHECK

SHEET INFORMATION:
STK PROJECT NO.: 374-154-21
SCALE: AS NOTED
DATE: JANUARY 2021
PLOT DATE: –
DRAWING NAME:

SEAL:
LICENSED ARCHITECT ANTONIO FINAZZI No. C31476 REN. 07-31-23 STATE OF CALIFORNIA

SHEET TITLE:
INTERIOR ELEVATIONS & ENLARGED PLANS

SHEET NO.:
A5.2

NOT FOR BID

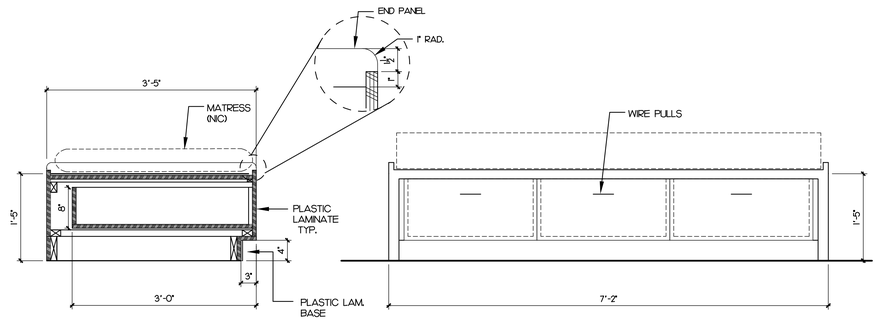

BUILT-IN BED DETAIL — SCALE: 1"=1'-0" — 13

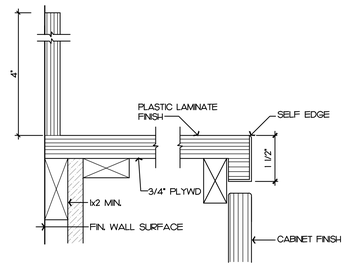

COUNTER EDGE DETAIL — SCALE: 6"=1'-0" — 9

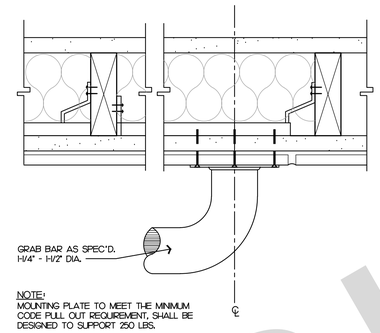

GRAB BAR DETAIL — SCALE: 6"=1'-0" — 5

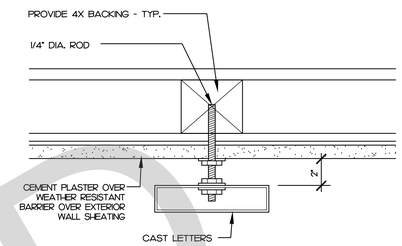

SIGN ATTACHMENT DETAIL — SCALE: 3"=1'-0" — 1

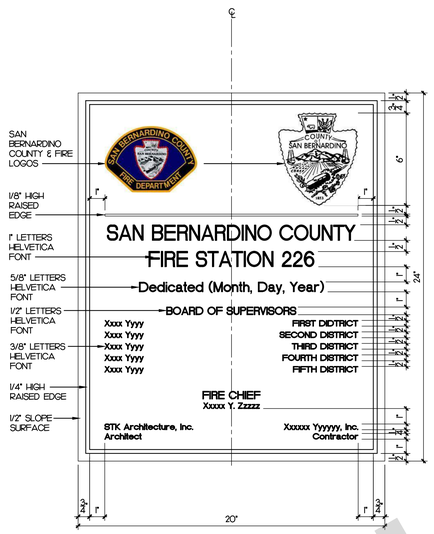

DEDICATION PLAQUE — SCALE: 3"=1'-0" — 17

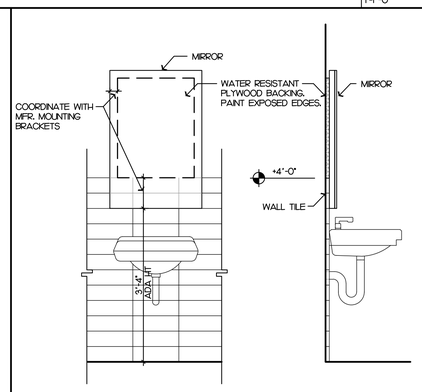

MIRROR DETAIL — SCALE: 3/4"=1'-0" — 14

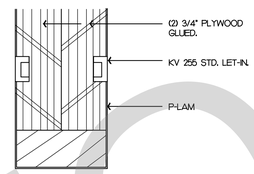

DETAIL — SCALE: FULL — 10

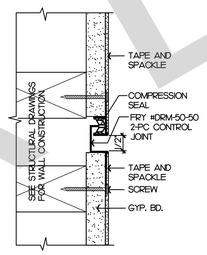

GYP. BD. CONTROL JOINT — SCALE: 6"=1'-0" — 6

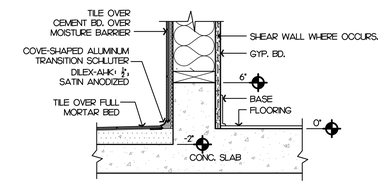

TILE @ FLOOR BASE — SCALE: 1-1/2"=1'-0" — 2

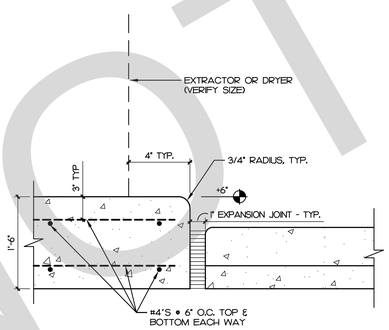

EXTRACTOR/DRYER PAD — SCALE: 3"=1'-0" — 15

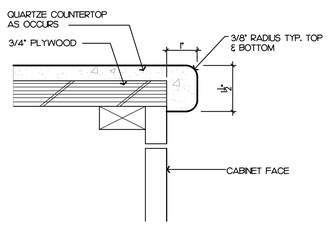

COUNTER EDGE — SCALE: 6"=1'-0" — 11

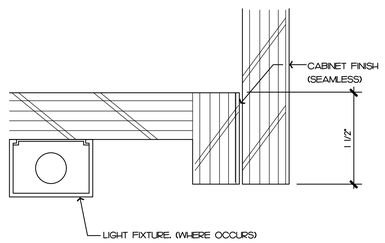

CABINET DETAIL — SCALE: FULL — 7

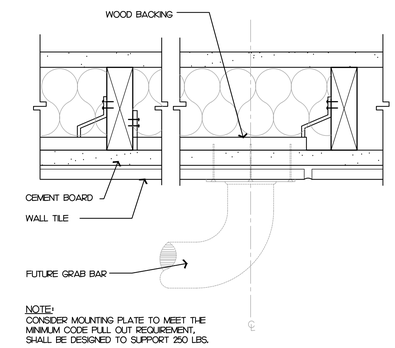

BACKING DETAIL — SCALE: 6"=1'-0" — 3

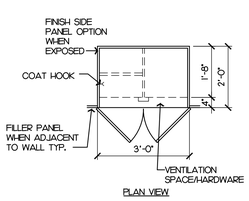

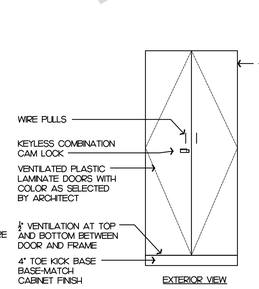

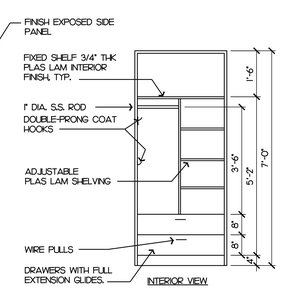

NOTE: CONSTRUCT PER "CUSTOM CABINETS" SPEC. SECTION 06 4100

WARDROBE LOCKERS — SCALE: 1/2"=1'-0" — 16

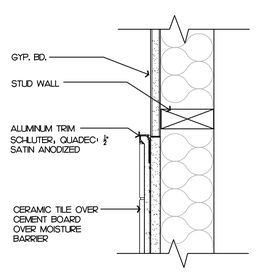

TILE TRIM DETAIL — SCALE: 3/16"=1'-0" — 12

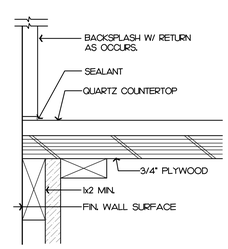

BACK SPLASH DETAIL — SCALE: 6"=1'-0" — 8

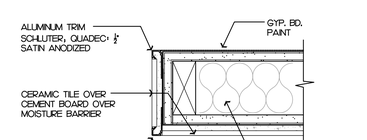

TILE TRANSITION DETAIL — SCALE: 3"=1'-0" — 4

NOT FOR BID

STK
42095 ZEVO DR., TEMECULA, CALIFORNIA 92590-3780
Phone: 951.296.9110 Fax: 951.296.6079 Email: stk@stkinc.com

CONSULTANT:

PROJECT ADMINISTERED BY:
SAN BERNARDINO COUNTY
PROJECT & FACILITIES
MANAGEMENT DEPARTMENT

385 N. ARROWHEAD AVE.
SAN BERNARDINO, CA 92415

PROJECT NAME:
SAN BERNARDINO COUNTY FIRE DEPARTMENT:
FIRE STATION 226

PROJECT # 10.0.0.032
CIP #21-037
CAFM # SAB198
APN # 0273-011-22

1920 DEL ROSA AVE N.
SAN BERNARDINO,
CA 92404

ISSUE INFORMATION:

DATE:	INFORMATION:
04-11-2022	20% CD SET
04-28-2022	50% CD SET
06-15-2022	95% CD SET
09-16-2022	95% CD- 3rd BAY
10-03-2022	PLAN CHECK

SHEET INFORMATION:
STK PROJECT NO.: 374-154-21
SCALE: AS NOTED
DATE: JANUARY 2021
PLOT DATE: –
DRAWING NAME:

SEAL:
LICENSED ARCHITECT ANTONIO FINAZZO No. C31476 REN. 07-31-23 STATE OF CALIFORNIA

SHEET TITLE:
MISC. DETAILS

SHEET NO.:
A6.1

J:\374-SANBNRNDSFS-154-21 SBC Fire Station No. 226\Architect\Arch\1.6 A6.2 - MISC DETAILS\MISC DETAILS.dwg
09/30/2022 4:48PM

NOT USED

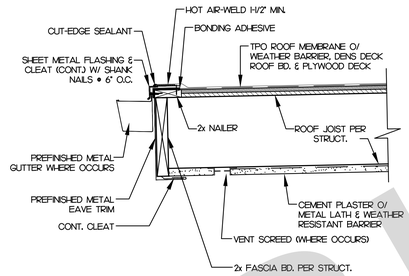

ROOF EDGE DETAIL — SCALE: 1-1/2"=1'-0" — 21

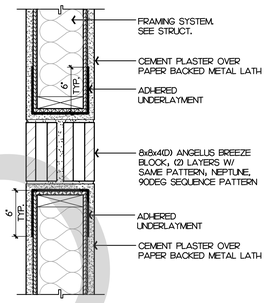

DETAIL — SCALE: 1-1/2"=1'-0" — 18

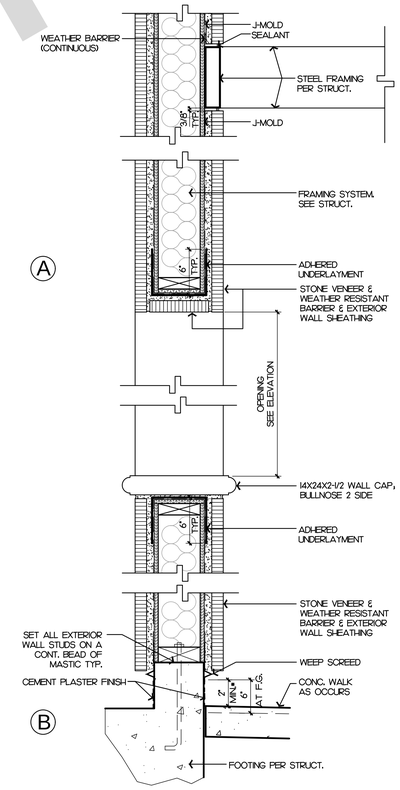

DETAIL — SCALE: 1-1/2"=1'-0" — 19

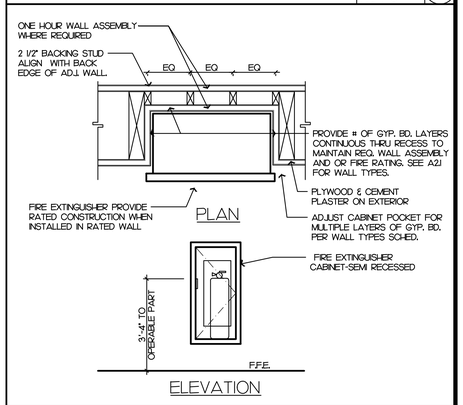

SEMI-RECESSED FIRE EXT. — SCALE: 3/4"=1'-0" — 20

NOT FOR BID

STK
42095 ZEVO DR., TEMECULA, CALIFORNIA 92590-3780
Phone: 951.296.9110 Fax: 951.296.6079 Email: stk@stkinc.com

CONSULTANT:

PROJECT ADMINISTERED BY:
SAN BERNARDINO COUNTY
PROJECT & FACILITIES
MANAGEMENT DEPARTMENT

385 N. ARROWHEAD AVE.
SAN BERNARDINO, CA 92415

PROJECT NAME:
SAN BERNARDINO COUNTY FIRE DEPARTMENT:
FIRE STATION 226

PROJECT # 10.010.032
CIP #21-037
CAFM # SAB198
APN # 0273-011-22

1920 DEL ROSA AVE N.
SAN BERNARDINO,
CA 92404

ISSUE INFORMATION:

DATE:	INFORMATION:
04-11-2022	20% CD SET
04-28-2022	50% CD SET
06-15-2022	95% CD SET
09-16-2022	95% CD- 3rd BAY
10-03-2022	PLAN CHECK

SHEET INFORMATION:
STK PROJECT NO.: 374-154-21
SCALE: AS NOTED
DATE: JANUARY 2021
PLOT DATE: –
DRAWING NAME:

SEAL:
LICENSED ARCHITECT ANTONIO FINAZZO No. C31476 REN. 07-31-23 STATE OF CALIFORNIA

SHEET TITLE:
MISC. DETAILS

SHEET NO.:
A6.2

J:\374-SANPMD\374-154-21 SBC Fire Station No. 226\Architect\cad\A6.1 & A6.2- MISCELLANEOUS DETAILS.dwg
09/30/2022 4:08PM

DESIGN PARAMETERS

ASCE 7 Hazards Report

Address:
No Address at This Location

Standard: ASCE/SEI 7-16
Risk Category: IV
Soil Class: C - Very Dense Soil and Soft Rock

Elevation: 1167.91 ft (NAVD 88)
Latitude: 34.13315
Longitude: -117.25332

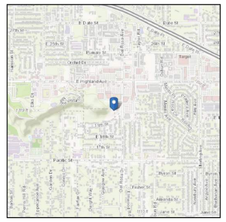

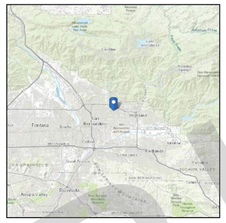

Wind

Results:

Wind Speed	107 Vmph
10-year MRI	67 Vmph
25-year MRI	73 Vmph
50-year MRI	77 Vmph
100-year MRI	82 Vmph

Data Source: ASCE/SEI 7-16, Fig. 26.5-1D and Figs. CC.2-1–CC.2-4, and Section 26.5.2
Date Accessed: Mon Mar 07 2022

Value provided is 3-second gust wind speeds at 33 ft above ground for Exposure C Category, based on linear interpolation between contours. Wind speeds are interpolated in accordance with the 7-16 Standard. Wind speeds correspond to approximately a 1.6% probability of exceedance in 50 years (annual exceedance probability = 0.00033, MRI = 3,000 years).

Site is not in a hurricane-prone region as defined in ASCE/SEI 7-16 Section 26.2.

https://asce7hazardtool.online/ Page 1 of 3 Mon Mar 07 2022

VALUES PER GEOTECH REPORT

Project No. 213764-1 Page 4

TABLE 1 – SUMMARY OF SEISMIC DESIGN PARAMETERS

Factor or Coefficient	Value
S_S	2.500g
S_1	0.936g
F_a	1.2
F_v	1.4
S_{DS}	1.600g
S_{D1}	1.020g
S_{MS}	2.400g
S_{M1}	1.530g
T_L	8 Seconds
MCEG PGA	0.99g
Shear-Wave Velocity (V100)	2,018.9 ft/sec
Site Classification	C
Risk Category	IV

HISTORIC SEISMICITY

A computerized search, based on Southern California historical earthquake catalogs, has been performed using the computer program EQSEARCH (Blake, 1989-2000b) and the ANSS Comprehensive Earthquake Catalog (U.S.G.S., 2022a). The following table and discussion summarizes the historic seismic events (greater than or equal to M4.0) that have been estimated and/or recorded during the time period of 1800 to January 2022, within a 100-kilometer radius of the site.

TERRA GEOSCIENCES

SHEET INDEX

GENERAL NOTES

SCS STRUCTURAL COVER SHEET
SN1 STRUCTURAL NOTES
SN2 STRUCTURAL NOTES

PLANS

S1 FOUNDATION PLAN
S2 LOW ROOF FRAMING PLAN
S3 HIGH / CLERESTORY ROOF FRAMING PLAN
S4 SITE STRUCTURES, STORAGE BUILDING & TRASH ENCLOSURE - ROOF FRAMING AND FOUNDATION PLANS
S5 SITE STRUCTURES, FUEL GENERATOR/TANK CANOPY - ROOF FRAMING AND FOUNDATION PLANS

STRUCTURAL DETAILS

SD1 FOUNDATION DETAILS
SD1.1 SITE & RETAINING WALL DETAILS
SD2 GENERAL WOOD FRAMING DETAILS
SD3 ROOF FRAMING DETAILS
SD3.1 AWNING FRAMING DETAILS
SD4 SITE STRUCTURE DETAILS

PROJECT DESIGN CRITERIA	
BUILDING CODE:	2019 CBC
LOCATION (LATITUDE / LONGITUDE):	34.13315, -117.25332
GEOTECHNICAL PARAMETERS:	
SOILS ENGINEER:	INLAND FOUNDATION ENGINEERING, INC.
REPORT NUMBER:	S168-183
DATE:	FEBRUARY 22, 2022 (ORIGINAL REPORT), JUNE 28, 2022 (LATERAL EARTH PRESSURE ADDENDUM)
ALLOWABLE SOIL BEARING PRESSURE:	1,700PSF - 3,400PSF
ALLOWABLE PASSIVE PRESSURE:	280PCF
EXPANSION POTENTIAL:	LOW
LIQUEFACTION POTENTIAL:	NONE
TOTAL SETTLEMENT:	LESS THAN 1"
DIFFERENTIAL SETTLEMENT POTENTIAL:	LESS THAN 1" OVER 40'
CORROSIVITY:	MILD
SULFATE CONTENT:	CLASS S0
CHLORIDE CONTENT:	19 PPM
SEISMIC DESIGN PARAMETERS:	
RISK CATEGORY:	IV
SITE CLASS:	C
SHORT PERIOD SPECTRAL ACCELERATION, S_s:	2.500
1s PERIOD SPECTRAL ACCELERATION, S_1:	0.936
SPECTRAL RESPONSE COEFFICIENT, S_{D1}:	1.020
SHORT PERIOD SPECTRAL RESPONSE, S_{DS}:	1.600
SITE COEFFICIENT, F_a:	1.2
SITE COEFFICENT, F_v:	1.4
SEISMIC DESIGN CATEGORY:	F
SEISMIC IMPORTANCE FACTOR, I_e:	1.5
RESPONSE MODIFICATION, R & SEISMIC FORCE RESISTING SYSTEM:	6.5 - LIGHT FRAMED SHEAR WALLS
DESIGN PROCEDURE:	EQUIVALENT LATERAL FORCE
REDUNDANCY FACTOR, ρ:	1.3
SYSTEM OVERSTRENGTH FACTOR, Ω:	2.5
DEFLECTION AMPLIFICATION FACTOR, C_d:	4.0
HORIZONTAL STRUCTURAL IRREGULARITIES:	NONE
VERTICAL STRUCTURAL IRREGULARITIES:	NONE
WIND DESIGN PARAMETERS:	
RISK CATEGORY:	II
WIND EXPOSURE CATEGORY:	C
ULTIMATE DESIGN WIND SPEED (3-SECOND GUST), V_{ULT}:	107
NOMINAL DESIGN WIND SPEED (3-SECOND GUST), V_{ASD}:	83 MPH
INTERNAL PRESSURE COEFFICIENT, GC_{pi}:	±0.18

GRAVITY DESIGN PARAMETERS: (PSF, SERVICE LOADS)

	DEAD	ROOF LIVE	SNOW	LIVE	TOTAL
ROOF:	15	20	-	-	35
EXTERIOR WALL:	15	-	-	-	15
INTERIOR WALL:	10	-	-	-	10

STK
SCI | TECH | SINCE 1991
42095 ZEVO DR., TEMECULA, CALIFORNIA 92590-3780
Phone: 951.296.9110 Fax: 951.296.6079 Email: stk@stkinc.com

CONSULTANT:

INNOVATIVE
STRUCTURAL ENGINEERING
27368 VIA INDUSTRIA
TEMECULA, CA 92590
TEL 951.296.9500
WWW.ISEENGINEERS.COM
SOCAL | NORCAL | COLORADO
ISE PROJECT NO.: 22-7067

PROJECT MANAGER:
SANDY FONG EXT. 1016
SANDY@ISEENGINEERS.COM

PROJECT ADMINISTERED BY:
SAN BERNARDINO COUNTY REAL ESTATE SERVICES DEPARTMENT - PROJECT MANAGEMENT DIVISION

385 N. ARROWHEAD AVE.
SAN BERNARDINO, CA 92415

PROJECT NAME:
SAN BERNARDINO COUNTY FIRE DEPARTMENT:
FIRE STATION 226

PROJECT # 10.10.1032

CIP # _____

CAFM # _____

1920 DEL ROSA AVE N.
SAN BERNARDINO,
CA 92404

ISSUE INFORMATION:

DATE:	INFORMATION:
10-03-2022	PLAN CHECK

SHEET INFORMATION:

STK PROJECT NO.: 374-154-21
SCALE: AS NOTED
DATE: SEPTEMBER 2022
PLOT DATE: 09-28-2022
DRAWING NAME:

SEAL:

REGISTERED PROFESSIONAL ENGINEER
SANDY FONG
C85985
CIVIL
STATE OF CALIFORNIA

SHEET TITLE:
STRUCTURAL COVER SHEET

SHEET NO.:
SCS

NOT FOR BID

File: SCS.dwg Layout: SCS Model: N/A
Plot: Fri 09/23/2022 12:20:56 PM

NOT FOR BID

WOOD MANUFACTURED PLATED TRUSSES

1. MANUFACTURED PLATED TRUSSES ARE A DEFERRED SUBMITTAL ITEM. SEE DESIGN/BUILD NOT SECTION FOR REQUIREMENTS.
2. GRAVITY LOADS: REFER TO PROJECT DESIGN CRITERIA FOR ALL ROOF & FLOOR MEMBER GRAVITY LOAD REQUIREMENTS. TRUSSES SHALL BE DESIGNED WITH CONSIDERATION FOR ALL SUPERIMPOSED LOADING, SUCH AS CHIMNEY FLUE FRAMING, MECHANICAL EQUIPMENT, ETC.
3. LATERAL LOADS: TRUSSES SHALL BE DESIGNED FOR SPECIFIC DRAG LOADS NOTED ON THE STRUCTURAL PLANS. ALL GABLE END TRUSSES SHALL BE DESIGNED FOR A MINIMUM 1000# LATERAL LOAD.
4. MATERIAL: ALL TRUSSES SHALL UTILIZE DOUGLAS FIR LUMBER UNLESS NOTED OTHERWISE.
5. DESIGN & CONSTRUCTION: THE STRUCTURAL DESIGN, MEANS OF CONSTRUCTION AND BRACING OF TRUSSES IS THE SOLE RESPONSIBILITY OF THE TRUSS MANUFACTURER AND ENGINEER OF RECORD FOR THE TRUSS DESIGN AND NOT ISE.
6. SHOP DRAWINGS: THE TRUSS SUPPLIER SHALL SUBMIT SHOP DRAWINGS TO ISE FOR REVIEW AND APPROVAL FOR GENERAL CONFORMANCE TO THE BUILDING STRUCTURAL DESIGN. THE SHOP DRAWINGS SHOULD INCLUDE A FLOOR PLAN LAYOUT AND DESIGN FOR EACH SPECIFIC TRUSS. THE TRUSS CALCULATION SHOULD INCLUDE MATERIAL TYPE, LOADING, TRUSS PROFILE AND REACTIONS.
7. HANGERS: THE TRUSS SUPPLIER SHALL SPECIFY ALL TRUSS TO TRUSS & TRUSS TO FRAMING MEMBER HANGERS.
8. LAYOUT & SPACING: THE STRUCTURAL PLANS SPECIFY A RECOMMENDED SPACING OF TRUSSES. THE TRUSS DESIGN PACKAGE DETERMINES THE FINAL SPACING OF TRUSSES. THE INTENT OF THE STRUCTURAL PLANS IS A RECOMMENDATION AND IN NO WAY REPRESENTS THE FINAL TRUSS SHAPE, CONFIGURATION OR SPACING.
9. TRUSS DEFLECTION SHALL BE LIMITED TO THE FOLLOWING:

DEFLECTION CRITERIA		
LEVEL	LIVE LOAD	TOTAL LOAD
ROOF	L/360	L/240
FLOOR	L/600	L/240

CONVENTIONAL WOOD FRAMING REQUIREMENTS - CBC A TABLE 2304.10.1	
CONNECTION	NAILING
BLOCKING BETWEEN JOISTS OR RAFTERS TO TOP PLATES, TOENAIL	(3) 8d COMMON , (3) 3" x 0.131" NAILS, OR (3) 3" 14 GAGE STAPLES
BLOCKING BETWEEN RAFTERS OR TRUSS NOT AT WALL TOP PLATES, TOENAIL, EACH END	(2) 8d COMMON , (2) 3" x 0.131" NAILS, (2) 3" 14 GAGE STAPLES
BLOCKING BETWEEN RAFTERS OR TRUSS NOT AT WALL TOP PLATES, END NAIL	(2) 16d COMMON , (3) 3" x 0.131" NAILS, (3) 3" 14 GAGE STAPLES
FLAT BLOCKING TO TRUSS/WEB FILLER, FACE NAIL	16d COMMON , 3" x 0.131" NAILS, 3" 14 GAGE STAPLES @ 6" O.C.
CEILING JOIST TO TOP PLATE, EACH JOIST, TOENAIL	(3) 8d COMMON , (3) 3" x 0.131" NAILS, (3) 3" 14 GAGE STAPLES, 7/16" CROWN
CEILING JOIST, LAPS PARTITION, FACE NAIL - TABLE 2308.7.3.1	(3) 16d COMMON , (4) 3" x 0.131" NAILS, (4) 3" 14 GAGE STAPLES, 7/16" CROWN
CEILING JOISTS TO PARALLEL RAFTERS, FACE NAIL - TABLE 2308.7.3.1	PER TABLE 2308.7.3.1
COLLAR TIE TO RAFTER, FACE NAIL	(3) 10d COMMON, (4) 3" x 0.131" NAILS, OR (4) 3" 14 GAGE STAPLES
RAFTER OR ROOF TRUSS TO PLATE, TOENAIL - TABLE 2308.7.5	(3) 10d COMMON, (4) 3" x 0.131" NAILS, OR (4) 3" 14 GAGE STAPLES
ROOF RAFTER TO 2x RIDGE BEAM, END NAIL	(2) 16d COMMON, (3) 3" x 0.131" NAILS, OR (3) 3" 14 GAGE STAPLES
ROOF RAFTER TO 2x RIDGE BEAM, TOE NAIL	(3) 10d COMMON, (4) 3" x 0.131" NAILS, OR (4) 3" 14 GAGE STAPLES
STUD TO STUD (NON-BRACED WALL PANELS), 24" O.C. FACE NAIL	16d COMMON (3 1/2"x 0.162")
STUD TO STUD (NON-BRACED WALL PANELS), 16" O.C. FACE NAIL	3" x 0.131" NAILS, (3) 3" 14 GAGE STAPLES
STUD TO STUD AT INTERSECTING CORNER (BRACED), 16" O.C. FACE NAIL	16d COMMON (3 1/2"x 0.162")
STUD TO STUD AT INTERSECTING CORNER (BRACED), 12" O.C. FACE NAIL	3" x 0.131" NAILS, (3) 3" 14 GAGE STAPLES
BUILT-UP HEADER (2" TO 2"), 16" O.C. EACH EDGE, FACE NAIL	16d COMMON (3 1/2"x 0.162")
CONTINUOUS HEADER TO STUD, TOENAIL.	(4) 8d COMMON
TOP PLATE TO TOP PLATE, 16" O.C. FACE NAIL	16d COMMON
TOP PLATE TO TOP PLATE, 12" O.C. FACE NAIL	3" x 0.131" NAILS, 3" 14 GAGE STAPLES
TOP PLATE TO TOP PLATE, AT END JOINTS, EACH SIDE OF END JOINT, FACE NAIL (MIN. 24" LAP SPLICE LENGTH EACH SIDE END JOINT)	(8) 16d COMMON, (12) 3" x 0.131" NAILS, (12) 3" 14 GAGE STAPLES
BOTTOM PLATE TO JOIST, RIM JOIST, OR BLOCKING AT NON-BRACED PANEL, 16" O.C. FACE NAIL	16d COMMON
BOTTOM PLATE TO JOIST, RIM JOIST, OR BLOCKING AT NON-BRACED PANEL, 12" O.C. FACE NAIL	3" x 0.131" NAILS, 3" 14 GAGE STAPLES
BOTTOM PLATE TO JOIST, RIM JOIST, OR BLOCKING AT BRACED PANEL, 16" O.C. FACE NAIL	(2) 16d COMMON, (4) 3" x 0.131" NAILS, (4) 3" 14 GAGE STAPLES
STUD TO TOP OR BOTTOM PLATE, TOENAIL	(4) 8d COMMON, (4) 3"x 0.131" NAILS, (4) 3" 14 GAGE STAPLES
STUD TO TOP OR BOTTOM PLATE, END NAIL	(2) 16d COMMON, (3) 3"x 0.131" NAILS, (3) 3" 14 GAGE STAPLES
TOP OR BOTTOM PLATE TO STUD, END NAIL	(2) 16d COMMON, (3) 3"x 0.131" NAILS, (3) 3" 14 GAGE STAPLES
TOP PLATES, LAP AND INTERSECTIONS, FACE NAIL.	(2) 16d COMMON , (3) 3" x 0.131" NAILS, OR (3) 3" 14 GAGE STAPLES
1" BRACE TO EACH STUD AND PLATE, FACE NAIL.	(2) 8d COMMON, (2) 3" x 0.131" NAILS, OR (2) 3" 14 GAGE STAPLES
1" x 6" SHEATHING TO EACH BEARING, FACE NAIL.	(2) 8d COMMON, (2) 3" x 0.128" NAILS
1" x 8" AND WIDER SHEATHING TO EACH BEARING, FACE NAIL.	(3) 8d COMMON, (3) 3" x 0.128" NAILS
JOIST TO SILL OR GIRDER, TOENAIL	(3) 8d COMMON , (3) 3" x 0.131" NAILS, OR (3) 3" 14 GAGE STAPLES
RIM JOIST, BLOCKING TO TOP PLATE, TOENAIL.	8d (2 1/2" x 0.131") AT 6" o/c, 3" x 0.131" NAILS AT 6" o/c, OR 3" 14 GAGE STAPLES AT 6" o/c
1" x 6" SUBFLOOR OR LESS TO EACH JOIST, FACE NAIL	(2) 8d COMMON
2" SUBFLOOR TO JOIST OR GIRDER, BLIND AND FACE NAIL	(2) 16d COMMON
2" PLANKS.	(2) 16d COMMON AT EACH BEARING
BUILT-UP GIRDER AND BEAMS	20d COMMON AT 32" o/c, 3" x 0.131" NAILS AT 24" o/c, OR 3" 14 GAGE STAPLES AT 24" o/c AT, AT TOP AND BOTTOM, STAGGERED (2) 20d COMMON, (3) 3" x 0.131" NAILS, OR (3) 3" 14 GAGE STAPLES AT ENDS AND AT EACH SPLICE
LEDGER STRIP, EACH JOIST OR RAFTER, FACE NAIL	(3) 16d COMMON, (4) 3" x 0.131" NAILS, OR (4) 3" 14 GAGE STAPLES
JOIST TO BAND JOIST, FACE NAIL	(3) 16d COMMON, (4) 3" x 0.131" NAILS, OR (4) 3" 14 GAGE STAPLES
BRIDGING TO JOIST, TOENAIL EACH END	(2) 8d COMMON , (2) 3" x 0.131" NAILS, OR (2) 3" 14 GAGE STAPLES
BRIDGING TO JOIST, TOENAIL EACH END	(2) 8d COMMON , (2) 3" x 0.131" NAILS, OR (2) 3" 14 GAGE STAPLES

EARTHWORK AND FOUNDATIONS

1. GEOTECHNICAL REPORT: PERFORM SOILS WORK COMPLYING WITH FOUNDATION DESIGN BASED ON RECOMMENDATIONS IN SOILS REPORT. SEE STRUCTURAL COVER SHEET FOR SOILS REPORT NUMBER AND DATE.
2. ALLOWABLE FOUNDATION DESIGN VALUES PER GEOTECHNICAL REPORT: VALUES BELOW MAY BE INCREASED 33 PERCENT FOR TRANSIENT LOADING.
   A. BEARING CAPACITY: SEE PROJECT DESIGN CRITERIA
   B. PASSIVE LATERAL BEARING PRESSURE: SEE PROJECT DESIGN CRITERIA
   C. COEFFICIENT OF FRICTION: SEE PROJECT DESIGN CRITERIA
3. GRADING, EXCAVATIONS, BACKFILL AND COMPACTION OF BACKFILL: COMPLY WITH GEOTECHNICAL REPORT AND REQUIREMENTS OF GOVERNING CODE AUTHORITY AND PERFORMED ONLY UNDER CONTINUOUS SPECIAL INSPECTION OF GEOTECHNICAL ENGINEER.
4. PREPARATION OF SOIL UNDER BUILDING PAD: SEE GEOTECHNICAL REPORT FOR OVER-EXCAVATION OF EXISTING SOIL AND INSTALLATION OF PROPERLY COMPACTED BACKFILL.
5. FOUNDATION EXCAVATIONS: FOUNDATIONS ARE TO BEAR ON FIRM EXISTING SOIL OR APPROVED COMPACTED FILL AS INDICATED IN GEOTECHNICAL REPORT. EXCAVATIONS ARE TO BE INSPECTED BY GEOTECHNICAL ENGINEER PRIOR TO PLACEMENT OF REINFORCING STEEL AND FORMWORK. ENSURE EXCAVATIONS ARE CLEANS, DRY AND FREE OF DEBRIS OR LOOSE SOIL. SLOPE SIDES OF EXCAVATION NOT LESS THAN MINIMUM SLOPE INDICATED IN GEOTECHNICAL REPORT. CAST CONCRETE DIRECTLY AGAINST EXCAVATED SURFACES.
6. BACKFILLING OF RETAINING WALLS: PLACE AFTER COMPLETION AND INSPECTION OF WATERPROOFING. ADEQUATELY SHORE RETAINING WALLS DURING BACKFILL OPERATION. UNLESS ADEQUATELY SHORED, DO NOT PLACE BACKFILL BEHIND BUILDING STRUCTURE RETAINING WALLS (EXCLUDING SITE RETAINING WALLS) UNTIL CONCRETE AT ELEVATED FLOOR LEVELS ADJACENT TO WALLS ARE COMPLETELY POURED (IN AREA) AND HAVE CURED FOR AT LEAST 7 DAYS.
7. WATER EXPOSURE AT BUILDING PERIMETER FOOTINGS: AT AREAS WHERE SIDEWALKS OR PAVING DO NOT IMMEDIATELY ADJOIN STRUCTURE, PROVIDE POSITIVE DRAINAGE AWAY FROM STRUCTURE AT BUILDING PERIMETER. LANDSCAPE IRRIGATION IS NOT PERMITTED WITHIN FIVE FEET OF BUILDING PERIMETER FOOTINGS EXCEPT WHEN ENCLOSED IN PROTECTED PLANTERS WITH DIRECT DRAINAGE AWAY FROM STRUCTURE OR WHICH COMPLIES WITH APPLICABLE CODE. DISCHARGE FROM DOWN SPOUTS, ROOF DRAINS AND SCUPPERS IS NOT PERMITTED ONTO UNPROTECTED SOILS WITHIN FIVE FEET OF BUILDING PERIMETER. REFER TO GEOTECHNICAL REPORT FOR COMPLETE REQUIREMENTS.

WOOD FRAMING

1. SAWN LUMBER: ALL STRUCTURAL SAWN LUMBER SHALL BE DOUGLAS FIR LARCH WITH 19% MAXIMUM MOISTURE CONTENT OF THE FOLLOWING GRADES, CONFORMING TO STANDARD GRADING RULES FOR WEST COAST LUMBER NO. 17, UNLESS NOTED OTHERWISE. THE LUMBER GRADES AS SPECIFIED BELOW MEET MINIMUM REQUIREMENTS:

LUMBER GRADES	
CONDITION	GRADE
PLATES & BLOCKING	STANDARD OR BETTER
STUDS TO 10'-0" IN HEIGHT	STANDARD OR BETTER
STUDS OVER 10'-0" IN HEIGHT	#2
2x RAFTER JOISTS	#2
4x6 THROUGH 4x12 BEAMS, HEADER & POSTS	#2
4x14 BEAMS, HEADERS & POSTS	#1
4x4 POSTS, HEADERS	#2
6x AND LARGER POSTS, BEAMS, STRINGERS	#1

2. GRADE STAMPS: WHERE POSSIBLE ALL LUMBER GRADE STAMPS SHALL REMAIN ON LUMBER AFTER INSTALLATION. CONVENTIONAL LUMBER SHALL MEET DOC PS 20 REQ.
3. PRESSURE TREATED LUMBER: ALL EXPOSED EXTERIOR WOOD AND WOOD BEARING ON CONCRETE OR MASONRY SHALL BE PRESSURE TREATED FIR. ALL NAILS TO PLATES TREATED w/ BORATE MAY BE STANDARD NAILS, FOR ALL OTHER PRESSURE TREATED PLATES, USE HOT DIP GALVANIZED NAILS.
4. PLYWOOD/OSB: EACH WOOD-BASED STRUCTURAL-USE PANEL USED FOR DIAPHRAGM CONSTRUCTION SHALL BE IDENTIFIED BY A REGISTERED STAMP OR BRAND OF AN ICC-APPROVED COMPLIANCE ASSURANCE AGENCY.WOOD-BASED STRUCTURAL-USE PANELS SHALL MEET THE REQUIREMENTS OF DOC PS 1 OR PS 2. ALL PANELS SHALL BE GLUED WITH EXTERIOR TYPE GLUE MEETING APA SPECIFICATIONS. PANELS PERMANENTLY EXPOSED TO THE OUTDOORS SHALL BE EXTERIOR TYPE.
5. METAL CONNECTORS: ALL METAL CONNECTORS SHALL BE THOSE MANUFACTURED BY SIMPSON STRONG TIE OR USP LUMBER CONNECTORS. THE NAILS FOR THESE CONNECTORS SHALL BE AS SPECIFIED BY THE MANUFACTURERS FOR CAPACITY OF THE HARDWARE. ALL CALLOUTS REFER TO SIMPSON PRODUCT CODES AND NAMES. REFER TO CROSS REFERENCE TABLES PROVIDED BY USP IN THEIR PRODUCT CATALOGS.
6. FIRE STOPS: PROVIDE FIRE STOPS AT ALL INTERSECTIONS OF STUD WALLS AT FLOOR, CEILING AND ROOF. FIRE STOPS SHALL BE 2x NOMINAL THICKNESS OF WOOD AND SHALL BE THE FULL WIDTH OF THE ENCLOSED SPACE. PLACE FIRESTOPS AT A MAXIMUM SPACING OF 10'-0" IN THE VERTICAL DIRECTION. PROVIDE 2x FIRE STOPS IN ALL FURRED SPACES, VERTICAL AND HORIZONTAL, AND AT A MAXIMUM SPACING OF 10'-0" IN EACH DIRECTION AND AT THE SAME LINES AS FIRE STOPS IN ADJACENT STUD WALLS.
7. BOLT HOLES: IN WOOD SHALL BE 1/32" TO 1/16" LARGER THAN THE NOMINAL BOLT DIAMETER . ALL BOLTS SHALL HAVE A STANDARD CUT WASHER UNDER HEAD AND NUT UNLESS NOTED OTHERWISE.
8. BOLTS: ALL BOLTS USED FOR WOOD CONNECTIONS SHALL BE ASTM A307, U.N.O. ALL NUTS AND BOLTS SHALL BE RE-TIGHTENED PRIOR TO THE APPLICATION OF SHEATHING, PLASTER, ETC.
9. NOTCHING & CUTTING: STRUCTURAL MEMBERS SHALL NOT BE CUT FOR PIPES, ETC. UNLESS SPECIFICALLY DETAILED. NOTCHING OF HORIZONTAL STRUCTURAL MEMBERS SHALL CONFORM TO THE BUILDING CODE. NOTCHING AND BORING OF STUDS AND TOP PLATES SHALL CONFORM TO THE BUILDING CODE.
10. JOIST BLOCKING: PROVIDE 2x BLOCKING BETWEEN JOISTS AND RAFTERS AT ALL BEARING SUPPORTS U.N.O. CROSS BRIDGING OR SOLID BLOCKING SHALL BE PROVIDED AT 8'-0" O.C. MAXIMUM FOR ALL JOISTS UNLESS BOTH EDGES ARE HELD IN LINE FOR THEIR ENTIRE LENGTH.
11. JOIST HANGERS: FOR I-JOISTS, PROVIDE SIMPSON "IUS" HANGER. FOR CONVENTIONAL JOIST, USE SIMPSON "LUS" HANGER, OR EQUIVALENT.
12. BEAM BEARING: ALL BEAMS TO BE SUPPORTED WITH FULL BEARING UNLESS NOTED OTHERWISE.
13. CONVENTIONAL FRAMING: ALL CONVENTIONAL FRAMED PORTIONS OF THE STRUCTURE ARE TO BE CONSTRUCTED PER CBC SECTION 2308 .
14. WALLS ON WOOD FLOOR: PROVIDE SINGLE FLOOR JOIST BELOW NON-BEARING, PARALLEL WALLS 10'-0" OR LONGER.
15. FINGER JOINTED STUDS: IT IS STRUCTURALLY ACCEPTABLE TO USE STRUCTURAL GLUED (FINGER-JOINTED) LUMBER. ALL FINGER-JOINTED LUMBER MUST BE "CER EXT JNTS" AND CONFORM WITH THE WWPA'S GLUED PRODUCTS PROCEDURES AND QUALITY CONTROL. FINGER-JOINTED LUMBER IS TO BE STAMPED WITH "CER EXT JNTS" AND MAY BE USED INTERCHANGEABLE WITH ANY SOLID-SAWN LUMBER PRODUCT OF THE SAME SPECIES AND GRADES. PLEASE REFER TO LUMBER SPECIFICATION IN THE STRUCTURAL GENERAL NOTES AND CALCULATIONS.
16. PLATE WASHERS AT NON-SILL PLATE APPLICATION: MINIMUM SIZE FOR SQUARE PLATE WASHERS: (REFER TO PLANS FOR SILL PLATE WASHER REQUIREMENTS.)

PLATE WASHERS NON SILL PLATE APPLICATION	
BOLT SIZE	PLATE WASHER SIZE
1/2"	3/16" x 2" x 2"
5/8"	1/4" x 2 1/2" x 2 1/2"
3/4"	5/16" x 2 3/4" x 2 3/4"
7/8"	5/16" x 3" x 3"
1"	3/8" x 3 1/2" x 3 1/2"

MANUFACTURED LUMBER PRODUCTS

1. MANUFACTURED LUMBER: ALL MANUFACTURED SHALL HAVE ICC APPROVAL FOR THE LATEST BUILDING CODE.
2. SIZES & STRENGTH: THE FOLLOWING MINIMUM DESIGN VALUES MUST BE ACHIEVED FOR EACH TYPE OF MANUFACTURED LUMBER SPECIFIED ON THE STRUCTURAL PLANS.

STRUCTURAL COMPOSITE LUMBER			
BEAM TYPE	MINIMUM DESIGN VALUES		
	Fb (PSI)	Fv (PSI)	E (PSI x 10^6)
PSL - PARALLAM	2,900	290	2.0
LVL - MICROLAM	2,600	285	1.9
LSL - TIMBERSTRAND	2,325	310	1.55
RIM - TIMBERSTRAND	1,700	400	1.3

3. I-JOISTS: PROVIDE FLOOR I-JOISTS AS MANUFACTURED BY I-LEVEL OR APPROVED EQUAL. THE FLOOR I-JOIST SIZES NOTED ON PLAN REFERENCE I-LEVEL PRODUCT.
4. FOR UNPROTECTED EXTERIOR APPLICATIONS, CONTRACTOR TO PROVIDE EXTERIOR GRADE PRODUCTS OF EQUIVALENT DESIGN CAPACITY PER MANUFACTURER REQUIREMENTS. CONTRACTOR TO IMMEDIATELY NOTIFY THE STRUCTURAL EOR OF ANY DISCREPANCIES, PRIOR TO THE START OF CONSTRUCTION.

WOOD HARDWARE NAILING SCHEDULE				
HOLDOWNS				
SIMPSON				USP
MODEL NAME	CAPACITY (LBS)	FASTENER SCHEDULE	APPLICATION	MODEL NAME
STHD14	3,500	(24) 10d Nails (0.148" x 3-1/4")	HOLDOWN	
HTT4	4,455	(18) SD #10 1-1/2"	HOLDOWN	
HDU4	4,565	(10) 1/4" x 2-1/2" SDS	HOLDOWN	
HDU5	5,645	(14) 1/4" x 2-1/2" SDS	HOLDOWN	
HDU8	6,765	(20) 1/4" x 2-1/2" SDS	HOLDOWN	
HDU11	9,335	(30) 1/4" x 2-1/2" SDS	HOLDOWN	
HDU14	10,770	(36) 1/4" x 2-1/2" SDS	HOLDOWN	
ANCHOR BOLTS				
SSTB20	4,785	5/8"	HOLDOWN ANCHOR	
SSTB24	5,790	5/8"	HOLDOWN ANCHOR	
SSTB28	11,645	7/8"	HOLDOWN ANCHOR	
SB1x30	13,090	1"	HOLDOWN ANCHOR	
HARDWARE				
A34	465	(8) 8d Nails (0.131" x 1-1/2")	AT BLOCKING OR RIM	MPA1
A35	650	(12) 8d Nails (0.131" x 1-1/2")	AT BLOCKING OR RIM	MPA1
LTP4	625	(12) 8d Nails (0.131" x 1-1/2")	AT BLOCKING OR RIM	MP4F
LTP5	565	(12) 8d Nails (0.131" x 1-1/2")	AT BLOCKING OR RIM	MP4F
LS50	560	(8) 8d Nails (0.131" x 1-1/2")	AT BLOCKING OR RIM	MP5
STRAPS				
MODEL NAME	CAPACITY (LBS)	FASTENER SCHEDULE	APPLICATION	MODEL NAME
CS16	1,705	(22) 8d Nails (0.131" x 2-1/2")	DIRECTLY TO TIMBER	RS150
CS16	1,705	(22) 8d Nails (0.131" x 2-1/2")	THRU PLYWOOD	RS150
CS14	2,490	(30) 8d Nails (0.131" x 2-1/2")	DIRECTLY TO TIMBER	
CMSTC16	4,690	(50) 10d Nails (0.148" x 3-1/4")	DIRECTLY TO TIMBER	
CMST14	6,475	(66) 10d Nails (0.148" x 2-1/2")	DIRECTLY TO TIMBER	
CMST12	9,215	(86) 10d Nails (0.148" x 2-1/2")	DIRECTLY TO TIMBER	
SHEAR WALLS				
NAIL TYPE	SHEAR WALL TYPE	NAIL SIZE		
8d COMMON	SW 2, 3, 4, 6	2-1/2" x .131"		
10d COMMON	SW 2B	2-1/4" x .148"		

CONCRETE EXPOSURE REQUIREMENTS

ACI 318-14 TABLE 19.3.1.1 - EXPOSURE CATEGORIES AND CLASSES		
CATEGORY	CLASS	CONDITION
F FREEZING AND THAWING	F0	CONCRETE NOT EXPOSED TO FREEZING-AND-THAWING CYCLES
	F1	CONCRETE EXPOSED TO FREEZING-AND-THAWING CYCLES WITH LIMITED EXPOSURE TO WATER
	F2	CONCRETE EXPOSED TO FREEZING-AND-THAWING CYCLES WITH FREQUENT EXPOSURE TO WATER
	F3	CONCRETE EXPOSED TO FREEZING-AND-THAWING CYCLES WITH FREQUENT EXPOSURE TO WATER AND EXPOSURE TO DEICING CHEMICALS
S SULFATE		WATER SOLUBLE SULFATE (SO_4^{2-}) IN SOIL, PERCENT BY WEIGHT / DISSOLVED SULFATE (SO_4^{2-}) IN WATER, PPM
	S0	$SO_4^{2-} < 0.10$ / $SO_4^{2-} < 150$
	S1	$0.10 \le SO_4^{2-} < 0.20$ / $150 \le SO_4^{2-} < 1500$ OR SEAWATER
	S2	$0.20 \le SO_4^{2-} \le 2.0$ / $1500 \le SO_4^{2-} \le 10,000$
	S3	$SO_4^{2-} > 2.00$ / $SO_4^{2-} > 10,000$
W IN CONTACT WITH WATER	W0	CONCRETE DRY IN SERVICE CONCRETE IN CONTACT WITH WATER AND LOW PERMEABILITY IS NOT REQUIRED
	W1	CONCRETE IN CONTACT WITH WATER AND LOW PERMEABILITY IS NOT REQUIRED
C CORROSION PROTECTION OF REINFORCEMENT	C0	CONCRETE DRY OR PROTECTED FROM MOISTURE
	C1	CONCRETE EXPOSED TO MOISTURE BUT NOT TO EXTERNAL SOURCES OF CHLORIDES
	C2	CONCRETE EXPOSED TO MOISTURE AND AN EXTERNAL SOURCE OF CHLORIDES FROM DEICING CHEMICALS, SALT, BRACKISH WATER, SEAWATER, OR SPRAY FROM THESE SOURCES

ACI 318-14 TABLE 19.3.2.1 - REQUIREMENTS FOR CONCRETE BY EXPOSURE CLASS						
EXPOSURE CLASS	MAX W/CM	MIN f'c	ADDITIONAL MINIMUM REQUIREMENTS			
			AIR CONTENT			LIMITS ON CEMENTITIOUS MATERIALS
F0	N/A	2500	N/A			N/A
F1	0.55	3500	PER TABLE 19.3.3.1			N/A
F2	0.45	4500	PER TABLE 19.3.3.1			N/A
F3	0.40 (2)	5000 (2)	PER TABLE 19.3.3.1			26.4.2.2(b)
			CEMENTITIOUS MATERIALS - TYPES			CALCIUM CHLORIDE ADMIXTURE
			ASTM C150	ASTM C595	ASTM C1157	
S0	N/A	2500	NO TYPE RESTRICTION	NO TYPE RESTRICTION	NO TYPE RESTRICTION	NO RESTRICTION
S1	0.50	4000	II (4,5)	TYPES IP, IS, OR IT WITH (MS) DESIGNATION	MS	NO RESTRICTION
S2	0.45	4500	V (5)	TYPES IP, IS, OR IT WITH (HS) DESIGNATION	HS	NOT PERMITTED
S3	0.45	4500	V PLUS POZZOLAN OR SLAG CEMENT (6)	TYPES IP, IS, OR IT WITH (HS) DESIGNATION PLUS POZZOLAN OR SLAG CEMENT (6)	HS PLUS POZZOLAN OR SLAG CEMENT (6)	NOT PERMITTED
W0	N/A	2500	NONE			
W1	0.50	4000	NONE			
			MAXIMUM WATER SOLUBLE CHLORIDE ION (CL^-) CONTENT IN CONCRETE, PERCENT BY WEIGHT OF CEMENT (7)		ADDITIONAL PROVISIONS	
			NON-PRESTRESSED CONCRETE	PRESTRESSED CONCRETE		
CO	N/A	2500	1.00	0.06	NONE	
C1	N/A	2500	0.30	0.06	NONE	
C2	0.40	5000	0.15	0.06	CONCRETE COVER (8)	

1. THE MAXIMUM W/CM LIMITS IN TABLE 19.3.2.1 DO NOT APPLY TO LIGHTWEIGHT CONCRETE.
2. FOR PLAIN CONCRETE, THE MAXIMUM W/CM SHALL BE 0.45 AND THE MINIMUM f'c SHALL BE 4,500 PSI.
3. ALTERNATIVE COMBINATIONS OF CEMENTITIOUS MATERIALS TO THOSE LISTED IN TABLE 19.3.2.1 ARE PERMITTED WHEN TESTED FOR SULFATE RESISTANCE AND MEETING THE CRITERIA IN 26.4.2.2(c).
4. FOR SEAWATER EXPOSURE, OTHER TYPES OF PORTLAND CEMENTS WITH TRI-CALCIUM ALUMINATE (C_3A) CONTENTS UP TO 10 PERCENT ARE PERMITTED IF THE W/CM DOES NOT EXCEED 0.40.
5. OTHER AVAILABLE TYPES OF CEMENT SUCH AS TYPE I OR TYPE III ARE PERMITTED IN EXPOSURE CLASSES S1 OR S2 IF THE C_3A CONTENTS ARE LESS THAN 8 PERCENT FOR EXPOSURE CLASS S1 OR LESS THAN 5 PERCENT FOR EXPOSURE CLASS S2.
6. THE AMOUNT OF THE SPECIFIC SOURCE OF THE POZZOLAN OR SLAG CEMENT TO BE USED SHALL BE AT LEAST THE AMOUNT THAT HAS BEEN DETERMINED BY SERVICE RECORD TO IMPROVE SULFATE RESISTANCE WHEN USED IN CONCRETE CONTAINING TYPE V CEMENT. ALTERNATIVELY, THE AMOUNT OF THE SPECIFIC SOURCE OF THE POZZOLAN OR SLAG CEMENT TO BE USED SHALL BE AT LEAST THE AMOUNT TESTED IN ACCORDANCE WITH ASTM C1012 AND MEETING THE CRITERIA IN 26.4.2.2(c).
7. WATER-SOLUBLE CHLORIDE ION CONTENT THAT IS CONTRIBUTED FROM THE INGREDIENTS INCLUDING WATER, AGGREGATES, CEMENTITIOUS MATERIALS, AND ADMIXTURES SHALL BE DETERMINED ON THE CONCRETE MIXTURE BY ASTM C1218 AT AGE BETWEEN 28 AND 42 DAYS.
8. CONCRETE COVER SHALL BE IN ACCORDANCE WITH 20.6.

PROPRIETARY ANCHORAGES AND FASTENERS

1. ANCHORAGES:
   1.A. DRILL AND EPOXY ANCHORS: SIMPSON SET-XP EPOXY ADHESIVE SYSTEM USING THREADED STEEL RODS CONFORMING TO ASTM-F1554, GRADE 36, OR REINFORCING STEEL CONFORMING TO ASTM A615 OR A706, GRADE 60, COMPLYING WITH ICC ES ESR 2508. INSTALLERS TO BE CERTIFIED BY MANUFACTURER.
   1.B. MECHANICAL ANCHORS:
   1.B.1. HILTI KWIK BOLT-III CARBON STEEL EXPANSION ANCHORS COMPLYING WITH ICC ESR-1385.
   1.B.2. SIMPSON TITEN HD ANCHORS STEEL SCREW ANCHORS COMPLYING WITH ICC ESR-2713.
   1.B.2.1. TITEN HD ANCHORS SHALL BE STAINLESS STEEL IN EXPOSED WET ENVIROMENTS.
   1.C. WELDED SHEAR STUDS: NELSON 3SL FLUX FILLED, HEADED STUD ANCHORS, 60,000 PSI MINIMUM ULTIMATE TENSILE STRENGTH, AUTOMATICALLY END WELDED IN FIELD CONFIRMING TO ASTM A108 AND COMPLYING WITH ICC ES REPORT NO. 2614.
   1.D. WELDED DEFORMED ANCHORS: NELSON D2L, COLD ROLLED, DEFORMED STEEL REINFORCING BARS CONFORMING TO ASTM A496 AND COMPLYING WITH ICC ES REPORT NO. 5217.
2. FASTENERS:
   2.A. POWDER ACTUATED FASTENERS: HILTI XCP, COMPLYING WITH CURRENT ICC ES REPORT NO. 2379. PROVIDE APPROPRIATE WASHER BETWEEN FASTENER HEAD AND LIGHT GAUGE METAL OR WOOD SURFACE.
   2.A.1. POWER-DRIVEN FASTENERS SHALL NOT BE USED TO ANCHOR SILL PLATES EXCEPT AT INTERIOR NON-BEARING WALL NOT DESIGN AS SHEAR WALLS.
   2.B. SELF-DRILLING METAL SCREWS (INDICATED "SCREWS" ON DRAWINGS): MINIMUM 0.292-INCH HEAD DIAMETER SELF-DRILLING/SELF-TAPPING STEEL SCREWS COMPLYING WITH ICC ES REPORT. MINIMUM YIELD STRESS, FY=33 KSI.
   2.A. FASTENERS, INCLUDING NUTS AND WASHERS, IN CONTACT WITH PRESERVATIVE-TREATED WOOD SHALL BE HOT DIPPED ZINC-COATED GALVANIZED STEEL, STAINLESS STEEL, SILICON BRONZE OR COPPER. STAPLES SHALL BE OF STAINLESS STEEL. FASTENERS OTHER THAN NAILS, STABLES, TIMBER RIVETS, WOOD SCREWS AND LAG SCREWS SHALL BE PERMITTED TO BE OF MECHANICALLY DEPOSITED ZINC-COATED STEEL WITH COATING WEIGHTS IN ACCORDANCE WITH ASTM B695, CLASS 55 MINIMUM.
   2.A.1. EXCEPTION: PLAIN CARBON STEEL FASTENERS, INCLUDING NUTS AND WASHERS, IN SBX/DOT AND ZINC BORATED PRESERVATIVE WOOD IN AN INTERIOR, DRY ENVIRONMENT SHALL BE PERMITTED.
3. INSTALLATION: SEE MANUFACTURER'S WRITTEN INSTRUCTIONS AND REFERENCED ICC ES REPORT.
4. MATERIALS NOT TO BE PENETRATED BY FASTENERS OR ANCHORAGES: POST-TENSIONED CONCRETE AND PRECAST, PRESTRESSED CONCRETE UNLESS SPECIFICALLY DETAILED HEREIN OR AS ACCEPTED IN WRITING BY ARCHITECT (STRUCTURAL ENGINEER). WHEN INSTALLATION IS PERMITTED, LOCATE PRESTRESSING AND POST-TENSIONED TENDONS ACCURATELY PRIOR TO INSTALLATION.
5. DRILLING HOLES IN EXISTING CONCRETE OR MASONRY FOR ANCHORAGES: USE NON-PNEUMATIC, ROTARY HAMMER TOOLS WITH ANSI COMPLIANT NON-REBAR CUTTING DRILL BITS TO DRILL HOLES OF PROPER TOLERANCES. LOCATE EXISTING REBAR INCLUDING PRESTRESSING AND POST-TENSIONING TENDONS USING NON-HAZARDOUS, NONDESTRUCTIVE 1 METHODS WITH ACCURATE LOCATION TOLERANCES (PLUS OR MINUS INCH PRIOR TO DRILLING 4 HOLES TO AVOID CUTTING OR DAMAGING. HOLES SHALL BE THOROUGHLY CLEANED PER MANUFACTURERS WRITTEN RECOMMENDATIONS PRIOR TO INSTALLATION OF ANCHORAGES.
6. DELETERIOUS MATERIALS: KEEP ANCHORAGES, INCLUDING HOLES FOR DRILL AND EPOXY ANCHORS AND MECHANICAL ANCHORS, FREE OF DUST, GREASE, AND OTHER MATERIALS THAT IMPAIR BOND.
6. TESTING FOR DRILL AND EPOXY ANCHORS:
   6.A. SPECIAL INSPECTION: SPECIAL INSPECTOR WILL PERFORM CONTINUOUS SPECIAL INSPECTION DURING INSTALLATION.
7. EXTERIOR PROPRIETARY ANCHORS & FASTENERS:
   7.A. FOR EXTERIOR APPLICATIONS & CORROSIVE ENVIRONMENTS, ALL ANCHORS SHOULD BE GALVANIZED OR STAINLESS STEEL. CONTRACTOR TO VERIFY AND PROVIDE GALVANIZED OR STAINLESS STEEL ANCHORAGE PER MANUFACTURER REQUIREMENTS. CONTRACTOR TO IMMEDIATELY NOTIFY THE STRUCTURAL EOR OF ANY DISCREPANCIES, PRIOR TO THE START OF CONSTRUCTION
   7.B. EXTERIOR ANCHOR BOLTS AND POST BASES SHALL BE GALVANIZED AND SHALL HAVE AT LEAST TWO GALVANIZED NUTS ABOVE THE BASE PLATE.

REINFORCING STEEL

1. REINFORCING STEEL:
   A. ALL BARS, U.N.O.: ASTM A615, GRADE 60
   B. BARS TO BE WELDED: ASTM A706, GRADE 60
   C. ADDITIONAL REQUIREMENTS FOR BARS, EXCLUDING TIES, IN DUCTILE MOMENT RESISTING FRAMES AND BOUNDARY ELEMENTS IN SHEAR WALLS: NO ADDITIONAL REQUIREMENTS IF ASTM A706, GRADE 60 BARS USED. ASTM615, GRADE 60 BARS ARE PERMITTED PROVIDED ACTUAL YIELD STRENGTH BASED ON MILL TESTS DOES NOT EXCEED SPECIFIED YIELD STRENGTH BY MORE THAN 18,000 PSI (RETESTS SHALL NOT EXCEED THIS VALUE BY MORE THAN AN ADDITIONAL 3,000 PSI) AND RATIO OF ACTUAL ULTIMATE TENSILE STRESS TO ACTUAL TENSILE YIELD STRENGTH IS NOT LESS THAN 1.25.
2. WIRE AND SPIRAL REINFORCING:
   A. SMOOTH WELDED WIRE FABRIC (W.W.F.): ASTM A185, FY=65 KSI, FLAT SHEETS ONLY. DO NOT USE ROLLED MESH. LAP SPACES (1 FOOT MINIMUM). OFFSET LAPS IN ADJACENT SHEETS TO AVOID CONTINUOUS LAPS.
   B. DEFORMED WIRE STIRRUPS (D4 AND LARGER ONLY): ASTM A497, FY=65 KSI.
   C. SPIRAL REINFORCING: ASTM A82, GRADE 60
3. SHOP DRAWINGS: ACI 315, PART B. SHOW REINFORCING STEEL PLACEMENT INCLUDING SIZES, QUANTITIES, SPACING, CLEARANCES, SPLICE LOCATIONS, LAP LENGTHS, AND CONCRETE COVERAGE AND SUBMIT TO ARCHITECT (STRUCTURAL ENGINEER). PROMPTLY NOTIFY ARCHITECT (STRUCTURAL ENGINEER) PRIOR TO DEVELOPING SHOP DRAWINGS IF INSUFFICIENT CLEAR DISTANCES BETWEEN REINFORCING STEEL AND OTHER CONGESTION IS ENCOUNTERED. NOTIFY SPECIAL INSPECTOR OF ADJUSTMENTS MADE FORM APPROVED CONTRACT DOCUMENTS WHICH ARE INDICATED ON ACCEPTED SHOP DRAWINGS THAT FACILITATE FIELD PLACEMENT OF REINFORCING STEEL AND CONCRETE.
4. SPLICE LOCATIONS: SPLICE #5 BARS AND LARGER ONLY AT LOCATIONS INDICATED. IF ADDITIONAL SPLICE LOCATIONS ARE PROPOSED, PROMPTLY NOTIFY ARCHITECT (STRUCTURAL ENGINEER) PRIOR TO DEVELOPING SHOP DRAWINGS.
   A. SPLICES IN WALLS: LOCATE SPLICES IN HORIZONTAL BARS AT WELL-STAGGERED LOCATIONS. DO NOT SPLICE VERTICAL BARS EXCEPT AT HORIZONTAL SUPPORTS SUCH AS FLOOR AND ROOF DIAPHRAGMS.
5. MINIMUM CLEARANCES BETWEEN PARALLEL REINFORCING STEEL INCLUDING DISTANCE BETWEEN SETS OF SPLICED BARS: 1" OR 1 db, WHICHEVER IS GREATER. 1 1/2" OR 1 1/2 db WHICHEVER IS GREATER, AT COLUMNS, PIERS, AND PILASTERS ONLY. FOR BUNDLED BARS, MINIMUM CLEAR DISTANCES BETWEEN UNITS OF BUNDLED BARS SHALL BE SAME AS SINGLE BARS EXCEPT BAR DIAMETER IS DERIVED FROM EQUIVALENT TOTAL AREA OF BUNDLE.
7. DOWELS AT CONSTRUCTION JOINTS: PROVIDE DOWELS MATCHING SIZE AND QUANTITY OF REINFORCING STEEL INTERRUPTED AT CONSTRUCTION JOINTS, UNLESS DETAILED OTHERWISE.
8. PLACEMENT OF BARS IN WALLS: PLACE VERTICAL BARS CLOSEST TO WALL SURFACES AT CURTAINS CONTAINING VERTICAL AND HORIZONTAL BARS OF THE SAME SIZE. IN CURTAINS WHICH VERTICAL AND HORIZONTAL BARS ARE OF DIFFERENT SIZES OR SPACING, PLACE LAYER WITH MOST STEEL AREA CLOSEST TO NEAR WALL SURFACE.
9. BARS TERMINATING AT WALLS, COLUMNS, BEAMS, AND FOUNDATIONS: EXTEND BARS TO WITHIN 2" (3" AT CONCRETE POURED AGAINST EARTH) OF FAR FACE OF WALL, COLUMN, BEAM OR FOUNDATION AND PROVIDE STANDARD ACI 90-DEGREE HOOK UNLESS DETAILED OTHERWISE.
10. BARS INTERRUPTED BY STRUCTURAL STEEL: EXTEND BARS TO WITHIN 2" OF STEEL FACE AND PROVIDE STANDARD ACI 90-DEGREE HOOK UNLESS DETAILED OTHERWISE.
11. WELDING: AWS D1.4, EXCEPT AS MODIFIED BY APPLICABLE CODE STANDARD 19-1. SEE RGA #3-77 OF CITY OF LOS ANGELES "R" BOOK FOR ADDITIONAL REQUIREMENTS IF GOVERNING CODE AUTHORITY IS CITY OF LOS ANGELES DEPARTMENT OF BUILDING AND SAFETY.
    A. ACCEPTABLE REINFORCING STEEL FOR WELDING ASTM A706: IF WELDING OF REINFORCING STEEL OTHER THAN A706 IS DESIRED, SUBMIT PROPOSED PROCEDURE, INDICATING CONFORMANCE TO APPLICABLE CODE AND REQUIREMENTS OF GOVERNING CODE AUTHORITY, TO ARCHITECT (STRUCTURAL ENGINEER) FOR ACCEPTANCE AND TO GOVERNING CODE AUTHORITY FOR APPROVAL PRIOR TO EXECUTION.
    B. WELDER CERTIFICATION: GOVERNING CODE AUTHORITY.
12. BENDING: BEND COLD UNLESS OTHERWISE ACCEPTED BY ARCHITECT (STRUCTURAL ENGINEER). DO NOT FIELD-BEND REINFORCING STEEL BARS EMBEDDED IN CONCRETE UNLESS OTHERWISE ACCEPTED IN WRITING BY ARCHITECT (STRUCTURAL ENGINEER).
13. LAP SPLICES: PROVIDE CLASS B SPLICES UNLESS INDICATED OTHERWISE.

CONCRETE

1. CONCRETE COMPRESSIVE STRENGTH: ALL CONCRETE SHALL ATTAIN A MINIMUM COMPRESSIVE STRENGTH AS SHOWN IN THE TABLE 2 BELOW AT 28 DAYS, U.N.O. ON PLANS. SEE ALSO SULFATE CONTENT NOTES.
2. AGGREGATES IN CONCRETE: SHALL BE NATURAL SAND AND ROCK (150 LB/CU. FT) CONFORMING TO ASTM C33. AGGREGATE SHALL HAVE PROVEN SHRINKAGE CHARACTERISTICS OF LESS THAN 0.04% PER ASTM C-157. DO NOT CHANGE SOURCE OF AGGREGATE DURING COURSE OF WORK WITHOUT WRITTEN CONSENT OF ENGINEER.
3. CEMENT: SHALL BE PORTLAND CEMENT CONFORMING TO ASTM C150. CEMENT SHALL BE TYPE II OR AS REQUIRED TO SATISFY SITE SOIL CONDITIONS. REFER TO TABLE 4 FOR CONCRETE CEMENT REQUIREMENTS ON SOIL CONTAINING SULFATE. REFER TO TABLE 2 FOR MAXIMUM WATER TO CEMENT RATIO.

CONCRETE STRENGTH			
CONDITION	STRENGTH, f'c	WATER / CEMENT RATIO	MAX. SLUMP
SLAB ON GRADE, TYP	3,000 PSI	-	-
FOOTING & GRADE BM, TYP	3,000 PSI	-	-
SLAB ON GRADE, APPARATUS BAY	4,500 PSI	-	-
FOOTING & GRADE BEAM, APPARATUS BAY	4,500 PSI	-	-

4. REBAR CLEAR COVER IN CONCRETE: THE FOLLOWING MINIMUM CLEAR DISTANCES BETWEEN REINFORCING STEEL AND FACE OF CONCRETE SHALL BE MAINTAINED UNLESS NOTED OTHERWISE:

REBAR CLEAR COVER FOR CAST-IN-PLACE CONCRETE MEMBERS			
CONCRETE EXPOSURE	MEMBER	REINFORCEMENT	SPECIFIED COVER
SLAB ON GRADE	ALL	ALL	CENTER OF SLAB OR 2" MIN
CONCRETE AGAINST & PERMANENTLY IN CONTACT WITH GROUND:	ALL	ALL	3"
EXPOSED TO WEATHER OR IN CONTACT WITH GROUND	ALL	No. 6 THROUGH No. 18 BARS	2"
		No. 5 BAR, W31 OR D31 WIRE, AND SMALLER	1-1/2"
NOT EXPOSED TO WEATHER OR IN CONTACT WITH GROUND	SLABS, JOISTS, AND WALLS	No. 14 AND No. 18 BARS	1-1/2"
		No. 11 BAR AND SMALLER	3/4"
	BEAMS, COLUMNS, PEDESTALS, AND TENSION TIES	PRIMARY REINFORCEMENT, STIRRUPS, TIES, SPIRALS, AND HOOPS	1-1/2"

5. VIBRATION: VIBRATION OF CONCRETE SHALL BE IN ACCORDANCE WITH GENERAL PROVISIONS OUTLINED IN PORTLAND CEMENT ASSOCIATION SPECIFICATION ST26.
6. CURING: CONCRETE SHALL BE MAINTAINED AT IN A MOIST CONDITION FOR A MINIMUM OF FIVE DAYS AFTER ITS PLACEMENT. FOR CONCRETE OTHER THAN SLAB ON GRADE, APPROVED CURING COMPOUNDS MAY BE USED IN LIEU OF MOIST CURING. ONLY IF APPROVED BY THE ENGINEER OR ARCHITECT.
7. INSPECTIONS, TESTING & QUALITY ASSURANCE: REFER TO STRUCTURAL NOTE SHEETS FOR DEPUTY SPECIAL INSPECTION, TESTING & STRUCTURAL OBSERVATION REQUIREMENTS. A MINIMUM OF ONE COMPRESSION TEST AT 7 DAYS AND 2 TESTS AT 28 DAYS FOR ALL CONCRETE SAMPLES. TAKE TEST AT A FREQUENCY OF ONCE EVERY 150 CU. YDS OR 5,000 SQ. FT MINIMUM.
8. ANCHOR BOLTS, DOWELS, INSERTS: SHALL BE TIED IN PLACE PRIOR TO POURING CONCRETE.
9. CONSTRUCTION AND POUR JOINTS: LOCATIONS SHALL BE APPROVED BY ENGINEER PRIOR TO POURING CONCRETE.
10. FLY ASH: SHALL NOT BE USED IN CONCRETE.
11. FORMWORK: FORMWORK TOLERANCE SHALL IN ACCORDANCE WITH THE C.B.C. AND A.C.I. STANDARDS.
12. HOT AND COLD WEATHER CONCRETING:
    A. HOT WEATHER CONCRETING: WHEN AIR TEMPERATURE RISES ABOVE 80° F AND HUMIDITY FALLS BELOW 25, THE CONTRACTOR SHALL FOLLOW HOT WEATHER CONCRETING IN ACCORDANCE WITH ACI 305 5-77. CONTRACTOR SHALL BE PREPARED TO USE FOG SPRAY OR OTHER PRECAUTIONS ACCEPTABLE TO ARCHITECT WHEN RATE OF EVAPORATION EQUALS OR EXCEEDS 0.2 POUNDS PER SQUARE FOOT PER HOUR.
    B. COLD WEATHER CONCRETING: ADEQUATE EQUIPMENT SHALL BE PROVIDED FOR HEATING CONCRETE MATERIALS AND PROTECTING CONCRETE DURING FREEZING OR NEAR FREEZING WEATHER. ALL CONCRETE MATERIALS AND ALL REINFORCEMENT, FORMS FILLERS AND GROUND WITH WHICH THE CONCRETE IS TO CONTACT SHALL BE FREE FROM FROST. FROZEN MATERIAL OR MATERIALS CONTAINING ICE SHALL NOT BE USED. COLD WEATHER CONCRETING SHALL BE DONE IN ACCORDANCE WITH ACI 306 R-78. (LATEST EDITION)
13. PIPES IN CONCRETE: PIPES MAY PASS THROUGH STRUCTURAL CONCRETE IN SLEEVES, BUT SHALL NOT BE EMBEDDED THEREIN. PIPES OR DUCTS EXCEEDING ONE-THIRD THE SLAB OR WALL THICKNESS SHALL NOT BE PLACED IN THE STRUCTURAL CONCRETE UNLESS SPECIFICALLY DETAILED.
14. EXPOSED CORNERS: PROVIDE 3/4" CHAMFERS AT ALL EXPOSED CORNERS.
15. ARCHITECTURAL DETAILS: REFER TO ARCHITECTURAL DRAWINGS FOR REVEALS, AREAS OF TEXTURED CONCRETE OR SPECIAL FINISHES, ITEMS REQUIRED TO BE CAST INTO THE CONCRETE, CURBS AND SLAB DEPRESSIONS.
16. DRYPACK OR GROUT: SHALL HAVE A MINIMUM COMPRESSIVE STRENGTH OF 2,000 PSI AND BE COMPOSED OF ONE PART PORTLAND CEMENT TO NOT MORE THAN THREE PARTS SAND.

GENERAL NOTES

1. FIELD VERIFICATION: FIELD VERIFY EXISTING CONDITIONS AND DIMENSIONS PRIOR TO CONSTRUCTION. PROMPTLY NOTIFY ARCHITECT (STRUCTURAL ENGINEER) IN CASE OF DISCREPANCIES.
2. DESIGN INTENT: CONTRACT DOCUMENTS INDICATE DESIGN INTENT FORE STRUCTURE IN ITS COMPLETED STATE. THEY DO NOT INDICATE METHOD OF CONSTRUCTION. PROMPTLY NOTIFY ARCHITECT (STRUCTURAL ENGINEER), PRIOR TO PROCEEDING WITH WORK, IF DESIGN INTENT REQUIRES FURTHER CLARIFICATION.
3. DEVIATIONS, MODIFICATIONS AND SUBSTITUTIONS TO APPROVED STRUCTURAL DRAWINGS: MUST BE ACCEPTED IN WRITING BY ARCHITECT (STRUCTURAL ENGINEER) AND APPROVED BY GOVERNING CODE AUTHORITY. NO DEVIATION, MODIFICATION OR SUBSTITUTION WILL BE ACCEPTED VIA SHOP DRAWING REVIEW.
4. PROCEDURES OF CONSTRUCTION: CONTRACTOR IS RESPONSIBLE FOR PROCEDURES OF CONSTRUCTION COMPLYING WITH NATIONAL, STATE AND LOCAL SAFETY ORDINANCES. SITE VISITS (INCLUDING STRUCTURAL OBSERVATION) BY ARCHITECT (STRUCTURAL ENGINEER) DO NOT CONSTITUTE SUPERVISIONS OF METHODS OF CONSTRUCTION.
   A. PROTECTION OF UTILITIES: LOCATE EXISTING UTILITIES, INCLUDING THOSE NOT SHOWN ON CONTRACT DOCUMENTS, AND PROTECT THEM FROM DAMAGE. CONTRACTOR BEARS EXPENSE OF REPAIR OR REPLACEMENT OF UTILITIES IN CONJUNCTION WITH EXECUTION OF WORK.
   B. EXCAVATIONS: PROTECT STRUCTURE, ADJACENT STRUCTURES, ADJACENT PROPERTIES, STREETS, AND UTILITIES DURING EXCAVATION UTILIZING LAGGING, SHORING, UNDERPINNING AT SIDES AND RELATED PROCEDURES AS MAY BE REQUIRED. PROVIDE NECESSARY SUPPORTS FOR SOIL EXCAVATIONS. CONTRACTOR AND AFFECTED TRADES SHALL REFER TO GEOTECHNICAL REPORT FOR MORE INFORMATION.
   C. PROTECTION OF STRUCTURE: PROVIDE NECESSARY MEASURES TO PROTECT STRUCTURE DURING EXECUTION OF WORK.
   D. CONTRACTOR PROPOSED REVISIONS: WHERE A REVISION OF STRUCTURAL DESIGN OR CONNECTION IS PROPOSED BY CONTRACTOR TO ACCOMMODATE CONSTRUCTION TOLERANCES, CONSTRUCTION SEQUENCE AND/OR DIMENSION MODIFICATIONS, CONTRACTOR SHALL RETAIN A STRUCTURAL ENGINEER LICENSED IN STATE OF CALIFORNIA TO PERFORM DESIGN. SUBMIT STAMPED AND SIGNED DESIGN DRAWINGS AND CALCULATIONS TO THE ARCHITECT (STRUCTURAL ENGINEER) FOR REVIEW AND THE GOVERNING CODE AUTHORITY FOR APPROVAL.
   E. ERECTION PLANS: DETERMINE PHASES OF WORK REQUIRING ERECTION PLANS ACCORDING TO APPLICABLE SAFETY REGULATIONS. MAINTAIN CERTIFIED COPIES OF ERECTION PLANS AT SITE DURING CONSTRUCTION.
   F. SHORING, BRACING, AND OTHER TEMPORARY SUPPORTS: DESIGN AND ERECT SHORING, BRACING, AND OTHER TEMPORARY SUPPORTS WHERE STRUCTURE HAS NOT ATTAINED DESIGN STRENGTH AND AS REQUIRED FOR SAFE ERECTION. ENSURE FLOOR, ROOF, AND WALL MEMBERS ARE SECURELY SHORED AND BRACED DURING CONSTRUCTION. PROVIDE SHORING AT ELEVATED BEAMS AND SLABS SUPPORTING CONCRETE OR MASONRY WALLS DURING AND AFTER WALL POUR UNTIL WALL ATTAINS DESIGN STRENGTH.
   G. TEMPORARY LOADING: ENSURE CONSTRUCTION LOADS DO NOT EXCEED INDICATED DESIGN LIVE LOAD VALUES. NOTIFY AFFECTED SUB-CONTRACTOR TRADES OF THESE DESIGN LOAD LIMITS.
   H. FABRICATION, SHIPMENT, AND ERECTION OF STRUCTURAL STEEL: ENSURE STRESSES OCCURRING DURING FABRICATION, SHIPMENT, AND ERECTION OF STRUCTURAL STEEL ARE TEMPORARY AND ARE LESS THAN DESIGN AND ALLOWABLE STRESS CAPACITIES OF INDIVIDUAL MEMBERS. DO NOT IMPAIR FULL DESIGN AND LOAD CARRYING CAPACITY OF MEMBERS DUE TO FABRICATION, SHIPMENT, OR ERECTION. CONTRACTOR IS RESPONSIBLE FOR CONTROLLING ERECTION SEQUENCE, ERECTION PROCEDURE, TEMPERATURE DIFFERENTIALS AND WELD SHRINKAGE TO MINIMIZE RESIDUE STRESSES. PROVIDE ADDITIONAL MATERIALS FOR THE ERECTION OF STRUCTURAL STEEL SUCH AS TEMPORARY BRACING AND GUY CABLES AS MAY BE NECESSARY AT NO ADDITIONAL COST. REMOVE THESE MATERIALS UNLESS APPROVED IN WRITING BY OWNER. DO NOT TIGHTEN BOLTS IN TYPICAL BEAM TO COLUMN CONNECTIONS FOR ERECTION PURPOSES.
   I. SECURING REINFORCING STEEL, DOWELS, ANCHOR BOLTS AND EMBEDS: FIRMLY SUPPORT AND ACCURATELY PLACE COMPLYING WITH ACI STANDARDS PRIOR TO CASTING CONCRETE OR GROUT IN MASONRY WALLS. USE TIES AND SUPPORT BARS IN ADDITION TO REINFORCING STEEL SHOWN WHERE NECESSARY. NO WELDING OR REINFORCING STEEL, INCLUDING TACK WELDING, IS PERMITTED UNLESS OTHERWISE ACCEPTED IN WRITING BY ARCHITECT (STRUCTURAL ENGINEER). PROVIDE PLASTIC OR PLASTIC COATED CHAIRS AND SPACERS WHEN RESTING ON EXPOSED SURFACES.
5. COORDINATION RESPONSIBILITY: CONTRACTOR IS RESPONSIBLE FOR COORDINATION OF WORK INCLUDING THAT OF SUB-CONTRACTOR TRADES.
6. SUBMITTALS: SUBMIT TO ARCHITECT (STRUCTURAL ENGINEER) AS INDICATED ON STRUCTURAL DRAWINGS AND SPECIFICATIONS. GENERAL CONTRACTOR SHALL REVIEW SUBMITTAL FOR COMPLETENESS AND COMPLIANCE WITH CONTRACT DOCUMENTS PRIOR TO SUBMISSION.
   A. REQUEST FOR INFORMATION (RFI) SUBMITTALS: ACCOMPANY RFI'S WITH PARTIAL STRUCTURAL FOUNDATION OR FRAMING PLANS SHOWING LOCATION IN QUESTION AND AFFECTED STRUCTURAL MEMBERS. COPY PARTIAL PLAN FROM STRUCTURAL DRAWINGS AND INDICATE GRID LINE LOCATIONS AND FLOOR LEVEL. ALSO PROVIDE PROPERLY DRAWN ENGINEERING SKETCHES ILLUSTRATING ISSUES AND CONTRACTOR'S PROPOSED SOLUTIONS. PHOTOGRAPHS ARE NOT ACCEPTABLE SUBSTITUTES TO ENGINEERING SKETCHES.
7. CONTRACT DOCUMENTS USE: REVIEW CONTRACT DOCUMENTS IN THEIR ENTIRETY BEFORE PERFORMING STRUCTURAL RELATED WORK AND BEFORE DEVELOPING SHOP DRAWINGS. BRING DISCREPANCIES TO THE IMMEDIATE ATTENTION OF ARCHITECT (STRUCTURAL ENGINEER) BEFORE STARTING WORK.
   A. SCALING OF DRAWINGS: NOT PERMITTED.
   B. ADDITIONAL STRUCTURAL REQUIREMENTS: SEE SPECIFICATIONS.
   C. BUILDING GEOMETRY: SEE ARCHITECTURAL DRAWINGS FOR BUILDING GEOMETRY INCLUDING, BUT NOT LIMITED TO, TOP OF FLOOR AND ROOF ELEVATIONS; DEPRESSIONS; SLOPES; CURBS; DRAINS; TRENCHES; SLAB AND DECK EDGE LOCATIONS; WALL OVERALL DIMENSIONS; AND SIZE AND LOCATIONS OF OPENINGS IN FLOORS, ROOF AND WALLS.
   D. NON-STRUCTURAL ITEMS REQUIRING SPECIAL PROVISIONS: SEE ARCHITECTURAL, MECHANICAL, PLUMBING, AND ELECTRICAL DRAWINGS FOR NON-STRUCTURAL ITEMS REQUIRING SPECIAL PROVISIONS DURING CONSTRUCTION. THEY INCLUDE, BUT ARE NOT LIMITED TO, NON-STRUCTURAL WALLS; SIZE AND LOCATIONS OF OPENINGS AND SLEEVES PENETRATING STRUCTURE; SIZE AND LOCATION OF CONCRETE CURBS AND PADS; AND SIZE AND LOCATION OF PIPING, DUCTWORK, AND EQUIPMENT ANCHORAGES MOUNTED OR SUSPENDED FROM STRUCTURE. VERIFY EXACT SIZE AND LOCATION OF EQUIPMENT WITH EQUIPMENT MANUFACTURER.
8. MATERIALS: FURNISH AND INSTALL IN COMPLIANCE WITH LEGALLY CONSTITUTED PUBLIC AUTHORITIES HAVING JURISDICTION INCLUDING COUNTY AND LOCAL ORDINANCES AND SAFETY ORDERS OF STATE INDUSTRIAL ACCIDENT COMMISSION, OSHA.
9. PENETRATIONS, EMBEDMENT, AND OPENINGS IN STRUCTURAL MEMBERS: NO PENETRATION, EMBEDMENT, OPENING, SLEEVE, PIPE, OR CONDUIT SHALL OCCUR IN STRUCTURAL MEMBERS INCLUDING FOOTINGS, SLABS, WALLS, COLUMNS, AND BEAMS UNLESS SPECIFICALLY SHOWN OR INDICATED ON STRUCTURAL DRAWINGS.
10. TYPICAL DETAILS: DETAILS ON SD SERIES SHEETS ARE APPLICABLE THROUGHOUT PROJECT WHEREVER THE DESCRIBED CONDITION OCCURS AND MAY OR MAY NOT BE SPECIFICALLY REFERENCED ON STRUCTURAL DRAWINGS. CONTRACTOR IS RESPONSIBLE FOR IDENTIFYING THESE DETAILS AND UNDERSTANDING EXTENT OF THEIR APPLICATION PRIOR TO PERFORMING WORK.
11. WATERPROOFING & DRAINAGE: WATERPROOFING AND DRAINAGE IS OUTSIDE INNOVATIVE STRUCTURAL ENGINEERING'S SCOPE, EXPERIENCE, AND PROFESSIONAL EXPERTISE. INNOVATIVE STRUCTURAL ENGINEERING RECOMMENDS HIRING A WATERPROOFING & DRAINAGE PROFESSIONAL. IF NO WATERPROOFING PROFESSIONAL IS HIRED, OWNER AND CONTRACTOR ASSUME RESPONSIBILITY OF ALL WATERPROOFING & DRAINAGE REQUIREMENTS. INNOVATIVE STRUCTURAL ENGINEERING ACCEPTS NO LIABILITY AND SHALL BE HELD HARMLESS FOR ALL WATERPROOFING AND DRAINAGE REQUIREMENTS.

ABBREVIATIONS

AB	= ANCHOR BOLT	HDWR	= HARDWARE
ABV	= ABOVE	HGR	= HANGER
ADD'L	= ADDITIONAL	IBC	= INTERNATIONAL BUILDING CODE
ALT	= ALTERNATE	IN	= INCH
AWA	= ALIGN WITH ABOVE	INFO	= INFORMATION
BEW	= BOTTOM EACH WAY	INT	= INTERIOR
BLK	= BLOCK	INV	= INVERTED
BLKG	= BLOCKING	JST	= JOIST
BLW	= BELOW	LSL	= LAMINATED STRAND LUMBER
BM	= BEAM	LVL	= LAMINATED VENEER LUMBER
BN	= BOUNDARY NAILING	MAX	= MAXIMUM
BRG	= BEARING	MFR	= MANUFACTURER
BTM	= BOTTOM	MIN	= MINIMUM
BTWN	= BETWEEN	MULT	= MULTIPLE
BTR	= BETTER	N/A	= NOT APPLICABLE
CBC	= CALIFORNIA BUILDING CODE	N/P	= NOT PROVIDED
CLG	= CEILING	O/C	= ON CENTER
CONC	= CONCRETE	PI	PLASTICITY INDEX
DBL	= DOUBLE	PLT	= PLATE
DF	= DOUGLAS FIR	PLYWD	= PLYWOOD
DIA	= DIAMETER	PNL	= PANEL
DISTRIB	= DISTRIBUTION	PSL	= PARALLEL STRAND LUMBER
DJ	= DECK JOIST	PT	= PRESSURE TREATED
DP	= DEEP	REV	= REVISION
DR	= DROP	REQ	= REQUIRED
EA	= EACH	RF	= ROOF
EI	= EXPANSION INDEX	RR	= ROOF RAFTER
EMBED	= EMBEDMENT	SHTG	= SHEATHING
EN	= EDGE NAILING	SIM	= SIMILAR
EW	= EACH WAY	SPN	= SOLE PLATE NAILING
EWB	= ENGINEERED WOOD BEAM	SQ	= SQUARE
EXT	= EXTERIOR	SQSH	= SQUASH
FA	= FROM ABOVE	STD	= STANDARD
FDN	= FOUNDATION	SW	= SHEAR WALL
FH	= FULL HEIGHT	TP	= TOP PLATE
FJ	= FLOOR JOIST	TSL	= TRIANGULAR STRAND LUMBER
FL	= FLUSH	TYP	= TYPICAL
FLR	= FLOOR	UBC	= UNIFORM BUILDING CODE
FNGR	= FINGER	UNO	= UNLESS NOTED OTHERWISE
FRMG	= FRAMING	WWM	= WELDED WIRE MESH
FT	= FEET	W/	= WITH
GA	= GAGE	W/O	= WITHOUT
GLB	= GLU-LAM		
GT	= GIRDER TRUSS		
HDR	= HEADER		

STK ARCHITECTURE, INC.
42095 ZEVO DR., TEMECULA, CALIFORNIA 92590-3780
Phone: 951.296.9110 Fax: 951.296.6079 Email: stk@stkinc.com

CONSULTANT:

INNOVATIVE
STRUCTURAL ENGINEERING
27369 VIA INDUSTRIA
TEMECULA, CA 92590
TELE: 951.600.0032
WWW.ISEENGINEERS.COM
SOCAL | NORCAL | COLORADO
ISE PROJECT NO.: 22-7067

PROJECT MANAGER:
SANDY FONG EXT. 1016
SANDY@ISEENGINEERS.COM

PROJECT ADMINISTERED BY:

SAN BERNARDINO COUNTY REAL ESTATE SERVICES DEPARTMENT - PROJECT MANAGEMENT DIVISION

385 N. ARROWHEAD AVE.
SAN BERNARDINO, CA 92415

PROJECT NAME:

SAN BERNARDINO COUNTY FIRE DEPARTMENT:
FIRE STATION 226

PROJECT # 10.10.1032

CIP # ______

CAFM # ______

1920 DEL ROSA AVE N.
SAN BERNARDINO,
CA 92404

ISSUE INFORMATION:

DATE:	INFORMATION:
10-03-2022	PLAN CHECK

SHEET INFORMATION:

STK PROJECT NO.: 374-154-21
SCALE: AS NOTED
DATE: SEPTEMBER 2022
PLOT DATE: 09-28-2022
DRAWING NAME:

SEAL:

REGISTERED PROFESSIONAL ENGINEER
SANDY FONG
C83965
CIVIL
STATE OF CALIFORNIA

SHEET TITLE:

STRUCTURAL NOTES

SHEET NO.:

SN1

REQUIRED INSPECTION OF STEEL CONSTRUCTION PER CBC 2019 - SECT. 1705.2 & ACI 360-14

PRIOR TO WELDING STEEL - PER TABLE N5.4-1

CHECK IF REQUIRED	TASK	CONTINUOUS	PERIODIC
X	WELDING QUALIFICATION RECORDS AND CONTINUITY RECORDS		X
X	WELDING PROCEDURES (WPSa) AVAILABLE	X	
X	MANUFACTURER CERTIFICATIONS FOR WELDING CONSUMABLES	X	
X	MATERIAL IDENTIFICATION (TYPE/GRADE)		X
--	WELDER IDENTIFICATION SYSTEM [1]	X	
X	FIT-UP OF GROOVE WELDS (INCLUDING JOINT GEOMETRY) • JOINT PREPARATION • DIMENSIONS (ALIGNMENT, ROOT OPENING, ROOT FACE, BEVEL) • CLEANLINESS (CONDITION OF STEEL SURFACES) • TACKING (TACK WELD QUALITY AND LOCATION) • BACKING TYPE AND FIT (IF APPLICABLE)		X
X	FIT-UP OF GROOVE WELDS OF HSS T-, Y- AND K-JOINT WITHOUT BACKING (INCLUDING JOINT GEOMETRY) • JOINT PREPARATION • DIMENSIONS (ALIGNMENT, ROOT OPENING, ROOT FACE, BEVEL) • CLEANLINESS (CONDITION OF STEEL SURFACES) • TACKING (TACK WELD QUALITY AND LOCATION)		X
--	CONFIGURATION AND FINISH OF ACCESS HOLES		X
X	FIT-UP OF FILLET WELDS • DIMENSIONS (ALIGNMENT, GAPS AT ROOT) • CLEANLINESS (CONDITION OF STEEL SURFACES) • TACKING (TACK WELD QUALITY AND LOCATION)		X
X	CHECK WELDING EQUIPMENT		X

DURING WELDING STEEL - PER TABLE N5.4-2

CHECK IF REQUIRED	TASK	CONTINUOUS	PERIODIC
X	CONTROL AND HANDLING OF WELDING CONSUMABLES • PACKAGING • EXPOSURE CONTROL		X
--	NO WELDING OVER CRACKED TACK WELDS		X
--	ENVIRONMENTAL CONDITIONS • WIND SPEED WITHIN LIMITS • PRECIPITATION AND TEMPERATURE		X
X	WPS FOLLOWED • SETTINGS ON WELDING EQUIPMENT • TRAVEL SPEED • SELECTED WELDING MATERIALS • SHIELDING GAS TYPE/FLOW RATE • PREHEAT APPLIED • INTERPASS TEMPERATURE MAINTAINED (MIN./MAX.) • PROPER POSITION (F, V, H, OH)		X
X	WELDING TECHNIQUES • INTERPASS AND FINAL CLEANING • EACH PASS WITHIN PROFILE LIMITATIONS • EACH PASS MEETS QUALITY REQUIREMENTS		X
--	PLACEMENT AND INSTALLATION OF STEEL HEADED STUD ANCHORS	X	

AFTER WELDING STEEL - PER TABLE N5.4-3

CHECK IF REQUIRED	TASK	CONTINUOUS	PERIODIC
X	WELDS CLEANED		X
X	SIZE, LENGTH AND LOCATION OF WELDS	X	
X	WELDS MEET VISUAL ACCEPTANCE CRITERIA • CRACK PROHIBITION • WELD/BASE-METAL FUSION • CRATER CROSS SECTION • WELD PROFILES • WELD SIZE • UNDERCUT • POROSITY	X	
--	ARC STRIKES	X	
--	K-AREA [2]	X	
--	WELD ACCESS HOLES IN ROLLED HEAVY SHAPES AND BUILT-UP HEAVY SHAPES [3]	X	
--	BACKING REMOVED AND WELD TABS REMOVED (IF REQUIRED)	X	
--	REPAIR ACTIVITIES	X	
X	DOCUMENT ACCEPTANCE OR REJECTION OF WELDED JOINT OR MEMBER	X	
X	NO PROHIBITED WELDS HAVE BEEN ADDED WITHOUT THE APPROVAL OF THE EOR		X

FOOTNOTES:

1. THE FABRICATOR OR ERECTOR, AS APPLICABLE, SHALL MAINTAIN A SYSTEM BY WHICH A WELDER WHO HAS WELDED A JOINT OR MEMBER CAN BE IDENTIFIED. STAMPS, IF USED, SHALL BE THE LOW-STRESS TYPE.
2. WHEN WELDING OF DOUBLER PLATES, CONTINUITY PLATES OR STIFFENERS HAS BEEN PERFORMED IN THE K-AREA, VISUALLY INSPECT THE WEB K-AREA FOR CRACKS WITHIN 3 IN. (75 MM) OF THE WELD.
3. AFTER ROLLED HEAVY SHAPES (SEE SECTION A3.1c) AND BUILT-UP HEAVY SHAPES (SEE SECTION A3.1d) ARE WELDED, VISUALLY INSPECT THE WELD ACCESS HOLE FOR CRACKS

EXCEPTION:

SPECIAL INSPECTION OF THE STEEL FABRICATION PROCESS SHALL NOT BE REQUIRED WHERE THE FABRICATOR DOES NOT PERFORM ANY WELDING, THERMAL CUTTING OR HEATING OPERATION OF ANY KIND AS PART OF THE FABRICATION PROCESS. IN SUCH CASES, THE FABRICATOR SHALL BE REQUIRED TO SUBMIT A DETAILED PROCEDURE FOR MATERIAL CONTROL THAT DEMONSTRATES THE FABRICATOR'S ABILITY TO MAINTAIN SUITABLE RECORDS AND PROCEDURES SUCH THAT, AT ANY TIME DURING THE FABRICATION PROCESS, THE MATERIAL SPECIFICATION, AND GRADE FOR THE MAIN STRESS-CARRYING ELEMENTS ARE CAPABLE OF BEING DETERMINED. MILL TEST REPORTS SHALL BE IDENTIFIABLE TO THE MAIN STRESS-CARRYING ELEMENTS
WHEN REQUIRED BY THE APPROVED CONSTRUCTION DOCUMENTS.

REQUIRED SPECIAL INSPECTIONS AND TESTS OF CONCRETE CONSTRUCTION PER TABLE 1705.3

CHECK IF REQUIRED	TYPE	CONTINUOUS	PERIODIC
X	INSPECT REINFORCEMENT, INCLUDING PRESTRESSING TENDONS, AND VERIFY PLACEMENT		X
	REINFORCING BAR WELDING:		
--	VERIFY WELDABILITY OF REINFORCING BARS OTHER THAN ASTM A706;		X
--	INSPECT SINGLE-PASS FILLET WELDS, MAXIMUM 5⁄16"; AND		X
--	INSPECT ALL OTHER WELDS	X	
X	INSPECT ANCHORS CAST IN CONCRETE		X
--	INSPECT ANCHORS POST-INSTALLED IN HARDENED CONCRETE MEMBERS		
--	• ADHESIVE ANCHORS INSTALLED IN HORIZONTALLY OR UPWARDLY INCLINED ORIENTATIONS TO RESIST SUSTAINED TENSION LOADS	X	
--	• MECHANICAL ANCHORS AND ADHESIVE ANCHORS NOT DEFINED ABOVE		X
X	VERIFY USE OF REQUIRED DESIGN MIX		X
X	PRIOR TO CONCRETE PLACEMENT, FABRICATE SPECIMENS FOR STRENGTH TESTS, PERFORM SLUMP AND AIR CONTENT TESTS, AND DETERMINE THE TEMPERATURE OF THE CONCRETE	X	
X	INSPECT CONCRETE AND SHOTCRETE PLACEMENT FOR PROPER APPLICATION TECHNIQUES	X	
--	VERIFY MAINTENANCE OF SPECIFIED CURING TEMPERATURE AND TECHNIQUES		X
--	INSPECT PRESTRESSED CONCRETE FOR:		
--	• APPLICATION OF PRESTRESSING FORCES; AND	X	
--	• GROUTING OF BONDED PRESTRESSING TENDONS	X	
--	INSPECT ERECTION OF PRECAST CONCRETE MEMBERS		X
--	VERIFY IN-SITU CONCRETE STRENGTH, PRIOR TO STRESSING OF TENDONS IN POST-TENSIONED CONCRETE AND PRIOR TO REMOVAL OF SHORES AND FORMS FROM BEAMS AND STRUCTURAL SLABS		X
--	INSPECT FORMWORK FOR SHAPE, LOCATION AND DIMENSIONS OF THE CONCRETE MEMBER BEING FORMED		X

EXCEPTIONS:

1. ISOLATED SPREAD FOOTINGS OF BUILDINGS THREE STORIES OR LESS ABOVE GRADE PLANE THAT ARE FULLY SUPPORTED ON EARTH OR ROCK.

2. CONTINUOUS CONCRETE FOOTINGS SUPPORTING WALLS OF BUILDINGS THREE STORIES OR LESS ABOVE GRADE PLANE THAT ARE FULLY SUPPORTED ON EARTH OR ROCK WHERE:

2.1. THE FOOTINGS SUPPORT WALLS OF LIGHT FRAME CONSTRUCTION;
2.2. THE FOOTINGS ARE DESIGNED IN ACCORDANCE WITH 1809.7; OR
2.3 THE STRUCTURAL DESIGN OF THE FOOTING IS BASED ON fc= 2,500 PSI OR LESS, REGARDLESS OF THE COMPRESSIVE STRENGTH SPECIFIED IN THE IN THE CONSTRUCTION DOCUMENTS OR USED IN THE FOOTING CONSTRUCTION.

3. NON STRUCTURAL CONCRETE SLABS SUPPORTED DIRECTLY ON THE GROUND, INCLUDING PRESTRESSED SLABS ON GRADE, WHERE THE EFFECTIVE PRE-STRESS IS LESS THAN 150 PSI.

4. CONCRETE FOUNDATION WALLS CONSTRUCTED WITH TABLE 1807.1.6.2

5. CONCRETE PATIOS, DRIVEWAYS AND SIDEWALKS ON GRADE.

MINIMUM VERIFICATION REQUIREMENTS OF MASONRY CONSTRUCTION PER TMS 602-TABLE 3

MINIMUM VERIFICATION	REQUIRED FOR QUALIFY ASSURANCE [1]		
	LEVEL 1	LEVEL 2	LEVEL 3
PRIOR TO CONSTRUCTION, VERIFICATION OF COMPLIANCE OF SUBMITTALS.	R	R	R
PRIOR TO CONSTRUCTION, VERIFICATION OF F'_M AND F'_{AAC}, EXCEPT WHERE SPECIFICALLY EXEMPTED BY THE CODE.	NR	R	R
DURING CONSTRUCTION, VERIFICATION OF SLUMP FLOW AND VISUAL STABILITY INDEX (VSI) WHEN SELF-CONSOLIDATING GROUT IS DELIVERED TO THE PROJECT SITE.	NR	R	R
DURING CONSTRUCTION, VERIFICATION OF F'_M AND F'_{AAC} FOR EVERY 5,000 SQ. FT. (465 SQ. M).	NR	NR	R
DURING CONSTRUCTION, VERIFICATION OF PROPORTIONS OF MATERIALS AS DELIVERED TO THE PROJECT SITE FOR PREMIXED OR PRE-BLENDED MORTAR, PRESTRESSING GROUT, AND GROUT OTHER THAN SELF-CONSOLIDATING GROUT.	NR	NR	R

[1] R = REQUIRED, NR = NOT REQUIRED

REQUIRED SPECIAL INSPECTIONS AND TESTS OF MASONRY CONSTRUCTION PER TABLE 1705.4 & TMS 602

MASONRY LEVEL 1 INSPECTION REQUIREMENTS

CHECK IF REQUIRED	TYPE
X	PRIOR TO CONSTRUCTION, VERIFICATION OF COMPLIANCE OF SUBMITTALS.

EXCEPTIONS: SPECIAL INSPECTIONS AND TESTS SHALL NOT BE REQUIRED FOR:
1. EMPIRICALLY DESIGNED MASONRY, GLASS UNIT MASONRY OR MASONRY VENEER DESIGNED IN ACCORDANCE WITH SECTION 2109, 2110 OR CHAPTER 14, RESPECTIVELY, WHERE THEY ARE PART OF A STRUCTURE CLASSIFIED AS RISK CATEGORY I, II OR III.
2. MASONRY FOUNDATION WALLS CONSTRUCTED IN ACCORDANCE WITH TABLE 1807.1.6.3(1), 1807.1.6.3(2), 1807.1.6.3(3) OR 1807.1.6.3(4).
3. MASONRY FIREPLACES, MASONRY HEATERS OR MASONRY CHIMNEYS INSTALLED OR CONSTRUCTED IN ACCORDANCE WITH SECTION 2111, 2112 OR 2113, RESPECTIVELY.

REQUIRED SPECIAL INSPECTIONS AND TESTS OF SOILS PER TABLE 1705.6

CHECK IF REQUIRED	TYPE	CONTINUOUS	PERIODIC
X	VERIFY MATERIALS BELOW SHALLOW FOUNDATIONS ARE ADEQUATE TO ACHIEVE THE DESIGN BEARING CAPACITY		X
X	VERIFY EXCAVATIONS ARE EXTENDED TO PROPER DEPTH AND HAVE REACHED PROPER MATERIAL		
X	PERFORM CLASSIFICATION AND TESTING OF COMPACTED FILL MATERIALS		X
X	VERIFY USE OF PROPER MATERIALS, DENSITIES AND LIFT THICKNESS DURING PLACEMENT AND COMPACTION OF COMPACTED FILL	X	
X	PRIOR TO PLACEMENT OF COMPACTED FILL, INSPECT SUBGRADE AND VERIFY THAT SITE HAS BEEN PREPARED PROPERLY		X

EXCEPTIONS:

WHERE SECTION 1803 DOES NOT REQUIRE REPORTING OF MATERIALS AND PROCEDURES FOR FILL PLACEMENT, THE SPECIAL INSPECTOR SHALL VERIFY THAT THE IN-PLACE DRY DENSITY OF THE COMPACTED FILL IS NOT LESS THAN 90 PERCENT OF THE MAXI-MUM DRY DENSITY AT OPTIMUM MOISTURE CONTENT DETERMINED IN ACCORDANCE WITH ASTM D1557

REQUIRED SPECIAL INSPECTIONS FOR SEISMIC RESISTANCE PER 1705.12

STRUCTURAL STEEL PER 1705.12.1

CHECK IF REQUIRED	TYPE	CONTINUOUS	PERIODIC
--	SPECIAL INSPECTIONS OF STRUCTURAL STEEL IN THE SEISMIC FORCE-RESISTING SYSTEMS IN BUILDINGS AND STRUCTURES ASSIGNED TO SEISMIC DESIGN CATEGORY B, C, D, E OR F SHALL BE PER-FORMED IN ACCORDANCE WITH THE QUALITY ASSURANCE REQUIREMENTS OF AISC 341.	--	--

EXCEPTIONS:
1. IN BUILDINGS AND STRUCTURES ASSIGNED TO SEISMIC DESIGN CATEGORY B OR C, SPECIAL INSPECTIONS ARE NOT REQUIRED FOR STRUCTURAL STEEL SEISMIC FORCE-RESISTING SYSTEMS WHERE THE RESPONSE MODIFICATION COEFFICIENT, R, DESIGNATED FOR "STEEL SYSTEMS NOT SPECIFICALLY DETAILED FOR SEISMIC RESISTANCE, EXCLUDING CANTILEVER COLUMN SYSTEMS" IN ASCE 7, TABLE 12.2-1, HAS BEEN USED FOR DESIGN AND DETAILING.
2. IN STRUCTURES ASSIGNED TO SEISMIC DESIGN CATEGORY D, E, OR F, SPECIAL INSPECTIONS ARE NOT REQUIRED FOR STRUCTURAL STEEL SEISMIC FORCE-RESISTING SYSTEMS WHERE DESIGN AND DETAILING IN ACCORDANCE WITH AISC 360 IS PERMITTED BY ASCE 7, TABLE 15.4-1.

STRUCTURAL STEEL ELEMENTS PER 1705.12.2

--	INSPECTION OF STRUTS, COLLECTORS, CHORDS AND FOUNDATION ELEMENTS, SHALL BE PERFORMED IN ACCORDANCE WITH THE QUALITY ASSURANCE REQUIREMENTS OF AISC 341.	--	--

EXCEPTIONS:
1. IN BUILDINGS AND STRUCTURES ASSIGNED TO SEISMIC DESIGN CATEGORY B OR C, SPECIAL INSPECTIONS OF STRUCTURAL STEEL ELEMENTS ARE NOT REQUIRED FOR SEISMIC FORCE-RESISTING SYSTEMS WITH A RESPONSE MODIFICATION COEFFICIENT, R, OF 3 OR LESS.
2. IN STRUCTURES ASSIGNED TO SEISMIC DESIGN CATEGORY D, E, OR F, SPECIAL INSPECTIONS OF STRUCTURAL STEEL ELEMENTS ARE NOT REQUIRED FOR SEISMIC FORCE-RESISTING SYSTEMS WHERE DESIGN AND DETAILING OTHER THAN AISC 341 IS PERMITTED BY ASCE 7, TABLE 15.4-1. SPECIAL INSPECTION SHALL BE IN ACCORDANCE WITH THE APPLICABLE REFERENCED STANDARD LISTED IN ASCE 7, TABLE 15.4-1.

STRUCTURAL WOOD PER 1705.12.2

CHECK IF REQUIRED	TYPE	CONTINUOUS	PERIODIC
--	INSPECTION DURING FIELD GLUING OPERATIONS OF ELEMENTS OF THE SEISMIC FORCE-RESISTING SYSTEM.	X	--
X	INSPECTION FOR NAILING, BOLTING, ANCHORING AND OTHER FASTENING OF ELEMENTS OF THE SEISMIC FORCE-RESISTING SYSTEM, INCLUDING WOOD SHEAR WALLS, WOOD DIAPHRAGMS, DRAG STRUTS, BRACES, SHEAR PANELS AND HOLD-DOWNS.	--	X

EXCEPTION:
SPECIAL INSPECTIONS ARE NOT REQUIRED FOR WOOD SHEAR WALLS, SHEAR PANELS AND DIAPHRAGMS, INCLUDING NAILING, BOLTING, ANCHORING AND OTHER FASTENING TO OTHER ELEMENTS OF THE SEISMIC FORCE-RESISTING SYSTEM, WHERE THE FASTENER SPACING OF THE SHEATHING IS MORE THAN 4 INCHES ON CENTER.

COLD-FORMED STEEL LIGHT FRAME CONSTRUCTION PER 1705.11.2

CHECK IF REQUIRED	TYPE	CONTINUOUS	PERIODIC
--	INSPECTION FOR WELDING OPERATIONS OF ELEMENTS OF THE MAIN WINDFORCE-RESISTING SYSTEM.	--	X
--	INSPECTION FOR SCREW ATTACHMENT, BOLTING, ANCHORING AND OTHER FASTENING OF ELEMENTS OF THE MAIN WINDFORCE-RESISTING SYSTEM, INCLUDING SHEAR WALLS, BRACES, DIAPHRAGMS, COLLECTORS (DRAG STRUTS) AND HOLD-DOWNS.	--	X

EXCEPTION:
SPECIAL INSPECTIONS ARE NOT REQUIRED FOR COLD-FORMED STEEL LIGHT-FRAME SHEAR WALLS AND DIAPHRAGMS, INCLUDING SCREW INSTALLATION, BOLTING, ANCHORING AND OTHER FASTENING TO COMPONENTS OF THE SEISMIC FORCE-RESISTING SYSTEM, WHERE EITHER OF THE FOLLOWING APPLIES:
1. THE SHEATHING IS GYPSUM BOARD OR FIBERBOARD.
2. THE SHEATHING IS WOOD STRUCTURAL PANEL OR STEEL SHEETS ON ONLY ONE SIDE OF THE SHEAR WALL, SHEAR PANEL OR DIAPHRAGM ASSEMBLY AND THE FASTENER SPACING OF THE SHEATHING IS MORE THAN 4 INCHES ON CENTER.

EXCEPTION:
THE SPECIAL INSPECTIONS SPECIFIED IN SECTIONS 1705.12.1 THROUGH 1705.12.9 ARE NOT REQUIRED FOR STRUCTURES
DESIGNED AND CONSTRUCTED IN ACCORDANCE WITH ONE OF THE FOLLOWING:
1. THE STRUCTURE CONSISTS OF LIGHT-FRAME CONSTRUCTION; THE DESIGN SPECTRAL RESPONSE ACCELERATION AT SHORT PERIODS, SDS, AS DETERMINED IN SECTION 1613.2.4, DOES NOT EXCEED 0.5; AND THE BUILDING HEIGHT OF THE STRUCTURE DOES NOT EXCEED 35 FEET.
2. THE SEISMIC FORCE-RESISTING SYSTEM OF THE STRUCTURE CONSISTS OF REINFORCED MASONRY OR REINFORCED CONCRETE; THE DESIGN SPECTRAL RESPONSE ACCELERATION AT SHORT PERIODS, SDS, AS DETERMINED IN SECTION 1613.2.4, DOES NOT EXCEED 0.5; AND THE BUILDING HEIGHT OF THE STRUCTURE DOES NOT EXCEED 25 FEET.
3. THE STRUCTURE IS A DETACHED ONE- OR TWO-FAMILY DWELLING NOT EXCEEDING TWO STORIES ABOVE GRADE PLANE AND DOES NOT HAVE ANY OF THE FOLLOWING HORIZONTAL OR VERTICAL IRREGULARITIES IN ACCORDANCE WITH SECTION 12.3 OF ASCE 7:
3.1. TORSIONAL OR EXTREME TORSIONAL IRREGULARITY.
3.2. NONPARALLEL SYSTEMS IRREGULARITY.
3.3. STIFFNESS-SOFT STORY OR STIFFNESS-EXTREME SOFT STORY IRREGULARITY.
3.4. DISCONTINUITY IN LATERAL STRENGTH-WEAK STORY IRREGULARITY.

REQUIRED SPECIAL INSPECTIONS OF METAL-PLATE-CONNECTED WOOD TRUSSES PER 1705.5.2

CHECK IF REQUIRED	TYPE	CONTINUOUS	PERIODIC
--	SPECIAL INSPECTIONS OF WOOD TRUSSES WITH OVERALL HEIGHTS OF 60 INCHES OR GREATER SHALL BE PERFORMED TO VERIFY THAT THE INSTALLATION OF THE PERMANENT INDIVIDUAL TRUSS MEMBER RESTRAINT/BRACING HAS BEEN INSTALLED IN ACCORDANCE WITH THE APPROVED TRUSS SUBMITTAL PACKAGE.	--	X
--	FOR WOOD TRUSSES WITH A CLEAR SPAN OF 60 FEET OR GREATER, THE SPECIAL INSPECTOR SHALL VERIFY DURING CONSTRUCTION THAT THE TEMPORARY INSTALLATION RESTRAINT/BRACING IS INSTALLED IN ACCORDANCE WITH THE APPROVED TRUSS SUBMITTAL PACKAGE.	--	X

REQUIRED SPECIAL INSPECTIONS FOR WIND RESISTANCE PER 1705.11

CHECK IF REQUIRED	TYPE	CONTINUOUS	PERIODIC
--	1. IN WIND EXPOSURE CATEGORY B, WHERE V_{ASD} AS DETERMINED IN ACCORDANCE WITH SECTION 1609.3.1 IS 120 MILES PER HOUR OR GREATER	--	X
--	2. IN WIND EXPOSURE CATEGORY C OR D, WHERE V_{ASD} AS DETERMINED IN ACCORDANCE WITH SECTION 1609.3.1 IS 110 MPH OR GREATER	--	X

STRUCTURAL WOOD PER 1705.11.1

CHECK IF REQUIRED	TYPE	CONTINUOUS	PERIODIC
--	DURING FIELD GLUING OPERATIONS OF ELEMENTS OF THE MAIN WINDFORCE RESISTING SYSTEM	X	--
X	INSPECTION OF NAILING, BOLTING, ANCHORING AND OTHER FASTENING OF ELEMENTS OF THE MAIN WINDFORCE-RESISTING SYSTEM, INCLUDING WOOD SHEAR WALLS, WOOD DIAPHRAGMS, DRAG STRUTS, BRACES AND HOLD-DOWNS.	--	X

EXCEPTION:
SPECIAL INSPECTIONS ARE NOT REQUIRED FOR WOOD SHEAR WALLS, SHEAR PANELS AND DIAPHRAGMS, INCLUDING NAILING, BOLTING, ANCHORING AND OTHER FASTENING TO OTHER ELEMENTS OF THE MAIN WINDFORCE-RESISTING SYSTEM, WHERE THE SPECIFIED FASTENER SPACING AT PANEL EDGES IS MORE THAN 4 INCHES ON CENTER.

COLD-FORMED STEEL LIGHT FRAME CONSTRUCTION PER 1705.11.2

CHECK IF REQUIRED	TYPE	CONTINUOUS	PERIODIC
--	INSPECTION FOR WELDING OPERATIONS OF ELEMENTS OF THE MAIN WINDFORCE-RESISTING SYSTEM.	--	X
--	INSPECTION FOR SCREW ATTACHMENT, BOLTING, ANCHORING AND OTHER FASTENING OF ELEMENTS OF THE MAIN WINDFORCE-RESISTING SYSTEM, INCLUDING SHEAR WALLS, BRACES, DIAPHRAGMS, COLLECTORS (DRAG STRUTS) AND HOLD-DOWNS.	--	X

EXCEPTION:
SPECIAL INSPECTIONS ARE NOT REQUIRED FOR COLD-FORMED STEEL LIGHT-FRAME SHEAR WALLS AND DIAPHRAGMS, INCLUDING SCREWING, BOLTING, ANCHORING AND OTHER FASTENING TO COMPONENTS OF THE WINDFORCE RESISTING SYSTEM, WHERE EITHER OF THE FOLLOWING APPLIES:
1. THE SHEATHING IS GYPSUM BOARD OR FIBERBOARD.
2. THE SHEATHING IS WOOD STRUCTURAL PANEL OR STEEL SHEETS ON ONLY ONE SIDE OF THE SHEARWALL, SHEAR PANEL OR DIAPHRAGM ASSEMBLY AND THE FASTENER SPACING OF THE SHEATHING IS MORE THAN 4 INCHES ON CENTER (O.C.).

WIND RESISTING COMPONENTS PER 1705.11.3

CHECK IF REQUIRED	TYPE	CONTINUOUS	PERIODIC
--	ROOF COVERING, ROOF DECK AND ROOF FRAMING CONNECTIONS.	--	X
--	EXTERIOR WALL COVERING AND WALL CONNECTIONS TO ROOF AND FLOOR DIAPHRAGMS	--	X

QUALITY ASSURANCE (STRUCTURAL OBSERVATION, MATERIALS TESTING, AND SPECIAL INSPECTION)

1. STRUCTURAL OBSERVATION:
   A. COORDINATION RESPONSIBILITIES OF CONTRACTOR: NOTIFY ARCHITECT (STRUCTURAL ENGINEER) 48 HOURS IN ADVANCE OF CRITICAL STAGES OF CONSTRUCTION INDICATED BELOW SO VISITS MAY BE SCHEDULED BY STRUCTURAL OBSERVER. FAILURE BY CONTRACTOR TO MEET OBSERVATION SCHEDULE MAY REQUIRE REMOVAL OF SUBSEQUENT WORK FOR OBSERVATION. CONTRACTOR TO BEAR COSTS OF REMOVAL AND REPLACEMENT OF FINISHED WORK OR FRAMING DAMAGED BY REMOVAL PROCESS OR AS REQUIRED FOR CORRECTIVE ACTION.
   B. PRE-CONSTRUCTION MEETING: OWNER MAY COORDINATE AND CALL FOR MEETING BETWEEN ARCHITECT (STRUCTURAL ENGINEER) RESPONSIBLE FOR STRUCTURAL DESIGN, STRUCTURAL OBSERVER, CONTRACTOR, AFFECTED SUBCONTRACTORS AND SPECIAL INSPECTOR. STRUCTURAL OBSERVER WILL PRESIDE OVER THIS MEETING. PURPOSE OF MEETING IS TO IDENTIFY MAJOR STRUCTURAL ELEMENTS AND CONNECTIONS THAT AFFECT VERTICAL AND LATERAL LOAD RESISTING SYSTEMS OF STRUCTURE AND TO REVIEW SCHEDULE OF STRUCTURAL OBSERVATION, MATERIALS TESTING, AND SPECIAL INSPECTION OF PROJECT.
   C. CRITICAL STAGES OF CONSTRUCTION REQUIRING STRUCTURAL OBSERVATION:
   I. CASTING OF CONCRETE
   II. COVERING OF FRAMING

2. MILL TEST REPORTS CERTIFYING MATERIALS: CONTRACTOR TO SUBMIT MILL TEST REPORTS CERTIFYING REINFORCING STEEL, STRESSING TENDONS, AND STRUCTURAL STEEL ARE OF IDENTIFIABLE TESTED STOCK TO OWNER, SPECIAL INSPECTOR, ARCHITECT (STRUCTURAL ENGINEER) AND, UPON REQUEST, TO GOVERNING CODE AUTHORITY. ENSURE MATERIALS ARE PROPERLY TAGGED FOR IDENTIFICATION. IF MILL TEST REPORTS CANNOT BE MADE AVAILABLE OR IF MATERIAL CANNOT BE IDENTIFIED, TESTING LABORATORY WILL PERFORM TESTS AS DIRECTED BY ARCHITECT (STRUCTURAL ENGINEER). CONTRACTOR SHALL PAY TESTING RELATED TO TESTS AND INSPECTIONS OF UNIDENTIFIABLE MATERIALS FURNISHED WITHOUT MILL LABORATORY FOR COSTS TEST REPORTS, MATERIALS FOUND DEFICIENT AFTER INITIAL TESTS AND INSPECTIONS, OR MATERIALS REPLACING DEFICIENT MATERIALS.
   A. ULTRASONIC EXAMINATION OF HEAVY ROLLED SHAPES AND THICK PLATES AT PROPOSED WELDED MOMENT CONNECTIONS: WHERE COMPLETE PENETRATION GROOVE WELDS OCCUR AT GROUPS 4 AND 5 STRUCTURAL STEEL SHAPES, AS DEFINED IN ASTM A6, AND PLATES EXCEEDING 2 INCHES THICK, SUBMIT MILL TEST REPORTS TO ARCHITECT (STRUCTURAL ENGINEER) AND, UPON REQUEST, TO GOVERNING CODE AUTHORITY. MILL TEST REPORTS SHALL CERTIFY THAT CHARPY V-NOTCH TESTING WAS CONDUCTED IN COMPLIANCE WITH ASTM A6, SUPPLEMENTARY REQUIREMENT S5, INCLUDING IMPACT TEST COMPLYING WITH ASTM A673 AT FREQUENCY P WITH MINIMUM AVERAGE VALUE OF 20 FT.-LBS. ABSORBED ENERGY AT 70 DEGREES FAHRENHEIT.

3. CERTIFICATE OF COMPLIANCE FOR OFFSITE FABRICATION: SUBMIT FOR STRUCTURAL STEEL, GLU-LAMS, AND PLYWOOD-WEB JOISTS, PRECAST CONCRETE IN COMPLIANCE WITH APPLICABLE CODE SECTION 1701.7. SUBMIT TO OWNER, TESTING LABORATORY, ARCHITECT (STRUCTURAL ENGINEER) AND GOVERNING CODE AUTHORITY.

4. WELD TESTING AND INSPECTION: TESTING LABORATORY WILL SUBMIT WELD TEST RESULTS TO OWNER, CONTRACTOR, ARCHITECT (STRUCTURAL ENGINEER) AND, UPON REQUEST, TO GOVERNING CODE AUTHORITY. SEE SPECIFICATIONS FOR TESTING REQUIREMENTS NOT INDICATED ON STRUCTURAL DRAWINGS.

   A. STRUCTURAL STEEL WELDING NOT DESTRUCTIVE TESTING REQUIREMENTS: APART FROM VISUAL INSPECTION AND REVIEW OF FABRICATION AND ERECTION REPORTS OF FABRICATOR/ERECTOR'S OWN QUALITY CONTROL TESTING AND INSPECTION, OWNER'S TESTING LABORATORY WILL PERFORM INDICATED SHOP AND FIELD INSPECTION AND TESTING. TESTING LABORATORY WILL BE AWS CERTIFIED AND WILL PROVIDE INSPECTORS FOR CONTINUOUS INSPECTION OF STEEL FABRICATION AND ERECTION AND STRUCTURAL WELDING. SHOP AND FIELD TESTING OF MATERIALS AND WELDING WILL BE AS FOLLOWS:
   I. COMPLETE JOINT PENETRATION WELDS: FOR STRUCTURES IN RISK CATEGORY III OR IV ULTRASONIC TESTING (UT) SHALL BE PERFORMED BY QA ON ALL CJP GROOVE WELDS SUBJECT TO TRANSVERSELY APPLIED TENSION LOADING IN BUTT, T- AND CORNER JOINTS, IN MATERIALS 5/16 IN. THICK OR GREATER. FOR STRUCTURES IN RISK CATEGORY II, UT SHALL BE PERFORMED BY QA ON 10% OF CJP GROOVE WELDS IN BUTT, T- AND CORNER JOINTS SUBJECT TO TRANSVERSELY APPLIED TENSION LOADING, IN MATERIALS 5/16 IN THICK OR GREATER. FOR STRUCTURES IN RISK CATEGORY I, NDT OF CJP GROOVE WELDS IS NOT REQUIRED. FOR ALL STRUCTURES IN ALL RISK CATEGORIES, NDT OF CJP GROOVE WELDS IN MATERIALS LESS THAN 5/16 IN THICK IS NOT REQUIRED.
   II. ACCESS HOLES: THERMALLY CUT SURFACES OF ACCESS HOLES SHALL BE TESTED BY QA USING MT OR PT, WHEN THE FLANGE THICKNESS EXCEEDS 2 IN. (50 MM) FOR ROLLED SHAPES, OR WHEN THE WEB THICKNESS EXCEEDS 2 IN FOR BUILT-UP SHAPES. ANY CRACK SHALL BE DEEMED UNACCEPTABLE REGARDLESS OF SIZE OR LOCATION.

5. CONTINUOUS SPECIAL INSPECTION: UNLESS OTHERWISE INDICATED, CONTINUOUS SPECIAL INSPECTION WILL BE PERFORMED BY SPECIAL INSPECTOR COMPLYING WITH APPLICABLE CODE SECTION 1701 AND SPECIFICALLY APPROVED BY GOVERNING CODE AUTHORITY FOR EACH INSPECTION CATEGORY BELOW. PERIODIC INSPECTION IS NOT PERMITTED UNLESS INDICATED IN THE PROGRAM OR OTHERWISE ACCEPTED BY ARCHITECT (STRUCTURAL ENGINEER). SEE SPECIFICATIONS FOR ADDITIONAL SPECIAL INSPECTION REQUIREMENTS.

ENGINEER OF RECORD - STRUCTURAL OBSERVATION PROGRAM

STRUCTURAL OBSERVATIONS FOR SEISMIC & WIND RESISTANCE:

1. THE OWNER SHALL EMPLOY THE ENGINEER OR ARCHITECT REGISTERED/LICENSED IN THE STATE OF CALIFORNIA WHO IS RESPONSIBLE FOR THE STRUCTURAL DESIGN TO PERFORM STRUCTURAL OBSERVATION(S).

   ENGINEER IN RESPONSIBLE CHARGE/ENGINEER OF RECORD:

   NAME: SHAWN LOTHROP, SE
   LIC #: S5627

   OBSERVER DESIGNATED BY E.O.R. RESPONSIBLE FOR STRUCTURAL OBSERVATION(S):

   NAME: SHAWN LOTHROP, SE
   LIC #: S5627

2. STRUCTURAL OBSERVATIONS SHALL BE PROVIDED BY THE DESIGNATED STRUCTURAL OBSERVER FOR ALL BUILDINGS AT THE FOLLOWING STAGES OF CONSTRUCTION, UNLESS OTHERWISE AUTHORIZED OR REQUESTED IN WRITING BY THE BUILDING OFFICIAL:

   A. PRE-CONCRETE POUR REBAR OBSERVATION
   B. WOOD FRAMING OBSERVATION PRIOR TO COVERING w/ FINISH & AFTER ROOF LOAD

3. PRIOR TO COMMENCEMENT OF OBSERVATION, THE STRUCTURAL OBSERVER SHALL SUBMIT TO THE BUILDING DEPARTMENT A WRITTEN STATEMENT IDENTIFYING THE FREQUENCY AND EXTENT OF THE STRUCTURAL OBSERVATION.

4. AT THE CONCLUSION OF WORK, THE STRUCTURAL OBSERVER SHALL SUBMIT TO THE BUILDING DEPARTMENT A WRITTEN STATEMENT THAT THE STRUCTURAL OBSERVATION VISITS HAVE BEEN MADE AND IDENTIFY ANY REPORTED DEFICIENCIES WHICH, TO THE BEST OF THE STRUCTURAL OBSERVER'S KNOWLEDGE, HAVE NOT BEEN RESOLVED.

DEPUTY SPECIAL INSPECTOR

1. DEPUTY SPECIAL INSPECTIONS SHALL BE PROVIDED BY:

   NAME:
   PHONE NUMBER:

2. SPECIAL INSPECTOR SHALL BE HIRED BY THE OWNER TO PROVIDE SPECIAL INSPECTIONS AS REQUIRED PER THE PLANS.

3. SPECIAL INSPECTOR: A QUALIFIED PERSON, EMPLOYED BY THE OWNER, WHO HAS DEMONSTRATED COMPETENCE TO THE SATISFACTION OF THE BUILDING OFFICIAL FOR INSPECTION OF THE PARTICULAR TYPE OF CONSTRUCTION OR OPERATION REQUIRING SPECIAL INSPECTION. DUTIES INCLUDE VISUAL INSPECTIONS AND FIELD MEASUREMENTS OF MATERIALS, OBTAINING SPECIMENS FOR TESTS AND RELATED ACTIONS INCLUDING PREPARATION OF REPORTS.

4. CONTINUOUS INSPECTION: ON SITE INSPECTION BY THE SPECIAL INSPECTOR ON A CONTINUOUS BASIS OBSERVING ALL WORK REQUIRING SPECIAL INSPECTION.

5. PERIODIC INSPECTION: INTERMITTENT INSPECTION AS PERMITTED BY THE PLAN, SPECIFIED AT PRE-DETERMINED INTERVALS OR MORE FREQUENTLY AS WORK PROGRESSES. NO SIGNIFICANT ELEMENTS OR AREAS SHALL BE COVERED BY ADDITIONAL WORK UNTIL APPROVED BY THE BUILDING OFFICIAL AND/OR SPECIAL INSPECTOR.

6. REPORTS SHALL BE SUBMITTED TO THE BUILDING OFFICIAL IN A TIMELY MANNER AS DETERMINED BY THE BUILDING OFFICIAL.

NAILS

1. DIAPHRAGM NAILING: ALL FLOOR SHEATHING, ROOF SHEATHING AND SHEAR PANELS CONSTRUCTED USING WOOD-BASED STRUCTURAL-USE PANELS SHALL BE FASTENED WITH COMMON NAILS. HARDWARE SHALL BE NAILED PER MANUFACTURER'S REQUIREMENTS, OTHERWISE SHORT NAILS MAY BE USED. NAILING SHALL BE PER THE BUILDING CODE UNLESS NOTED OTHERWISE ON THE PLANS OR DETAILS.

2. NAIL GUNS: MUST BE EQUIPPED WITH A FLUSH NAILER ATTACHMENT FOR NAILING OF PLYWOOD SHEAR WALLS, FLOOR SHEATHING AND ROOF SHEATHING.

3. NAIL MANUFACTURING: ALL NAILS MUST BE DOMESTICALLY MANUFACTURED & MEET THE REQUIREMENTS OF THE CURRENT BUILDING CODE.

4. GALVANIZED NAILS: ALL NAILS INTO PRESSURE TREATED LUMBER SHALL BE HOT DIPPED GALVANIZED OR OTHER APPROVED COATING TO RESIST CORROSION UNLESS PRESSURE TREATED PLATE IS TREATED WITH BORATE.

MASONRY

1. SPECIFIED COMPRESSIVE STRENGTH OF MASONRY (f'm): 1,500 PSI TYPICAL UNLESS NOTED OTHERWISE.

2. VERIFYING SPECIFIED COMPRESSIVE STRENGTH OF MASONRY (f'm): USE MASONRY PRISM TESTING METHODS UNLESS OTHERWISE ACCEPTABLE TO ARCHITECT (STRUCTURAL ENGINEER). FULL ALLOWABLE STRESSES ARE USED IN DESIGN. SUBMIT MASONRY PRISM DATA FOR EACH TYPE AND COMPRESSIVE STRENGTH OF MASONRY REQUIRED, WITH A PROFESSIONAL ENGINEER'S SIGNATURE AND STATE OF CALIFORNIA SEAL, TO ARCHITECT (STRUCTURAL ENGINEER). COMPLIANCE WITH MINIMUM REQUIRED COMPRESSIVE STRENGTH SHALL BE BASED ON APPLICABLE CODE SECTION 2105.3.

3. CONCRETE BLOCK: ASTM C90, MEDIUM WEIGHT, GRADE N-I AND APPLICABLE CODE STANDARD 21-4 ATTAINING A MINIMUM COMPRESSIVE STRENGTH AS REQUIRED TO MEET SPECIFIED COMPRESSIVE STRENGTH OF MASONRY (f'm).

4. FACE BRICK: ASTM C216 AND APPLICABLE CODE STANDARD 21-1.

5. PORTLAND CEMENT FOR MORTAR AND GROUT: ASTM C150, TYPE I OR II. USE OF MASONRY CEMENT OR PLASTIC CEMENT IS NOT PERMITTED.

6. AGGREGATES FOR MORTAR AND GROUT:
   A. AGGREGATES FOR MORTAR: ASTM C144.
   B. AGGREGATES FOR GROUT: C404, COARSE TYPE.

7. MORTAR: ASTM C270, TYPE S. MIX IN PROPORTIONS ACCORDING TO APPLICABLE CODE TABLE 21-A TYPE S. (2,000 PSI MINIMUM).

8. GROUT: ASTM C476, COARSE TYPE, ATTAINING A MINIMUM COMPRESSIVE STRENGTH AS REQUIRED TO MEET SPECIFIED COMPRESSIVE STRENGTH OF MASONRY (f'm). HOWEVER, IN NO CASE SHALL GROUT COMPRESSIVE STRENGTH BE LESS THAN 2,000 PSI AT 28 DAYS.

9. REINFORCING STEEL: REINFORCING STEEL SECTION OF GENERAL NOTES UNLESS INDICATED OTHERWISE.

10. COMPOSITE MASONRY WALL PENETRATION SUBMITTAL: SUBMIT FOR EACH WALL INDICATING SIZE AND LOCATION OF EACH WALL PENETRATION AND OPENING AS NECESSARY BY AFFECTED TRADES. SUBMIT TOGETHER WITH APPROPRIATE REINFORCING STEEL SHOP DRAWINGS. SUBMIT WRITTEN STATEMENT FROM SPECIAL INSPECTOR THAT NO ADDITIONAL PENETRATIONS OR OPENINGS WERE ADDED TO THOSE SHOWN IN PENETRATION SUBMITTAL.

11. REINFORCING STEEL SPLICES: LAP REINFORCING STEEL AT SPLICES A MINIMUM OF 48 BAR DIAMETERS, EXCEPT DOWELS IN FOOTINGS AT BASE OF WALLS SHALL SPLICE A MINIMUM OF 72 BAR DIAMETERS, UNLESS NOTED OTHERWISE. WHERE MINIMUM CLEAR DISTANCE BETWEEN BARS AT ADJACENT SPLICES IS 3 INCHES OR LESS, INCREASE LAP LENGTH 30 PERCENT UNLESS SPLICES ARE STAGGERED AT LEAST 24 BAR DIAMETERS.

12. DOWELS FOR WALLS, COLUMNS, PILASTERS, AND PIERS: MATCH SIZE AND SPACING OF VERTICAL REINFORCING STEEL, UNLESS NOTED OTHERWISE. SET DOWELS TO ALIGN WITH CELLS CONTAINING REINFORCING STEEL.

13. MINIMUM REINFORCING STEEL CLEARANCES:
    A. MINIMUM CLEARANCES BETWEEN REINFORCING AND OUTSIDE FACE OF MASONRY: 2" EXCEPT IN NO CASE SHALL CLEARANCE BE LESS THAN 1 ½ db.
    B. MINIMUM CLEARANCE BETWEEN REINFORCING AND INSIDE FACE OF GROUT CELL: ½"
    C. MINIMUM CLEARANCE DISTANCE BETWEEN PARALLEL REINFORCING: 1" OR db, WHICHEVER IS LESS. INCREASE TO 1 ½" OR 1 ½ db, WHICHEVER IS LESS, AT COLUMNS, PILASTERS, AND PIERS ONLY.

14. PLACEMENT: SET COURSES IN RUNNING BOND PATTERN UNLESS INDICATE OTHERWISE. SET CELLS IN VERTICAL ALIGNMENT. PROVIDE FLUSH MORTAR JOINTS AT SURFACES TO RECEIVE WATERPROOFING OR DAMP-PROOFING.

15. GROUTING: GROUT SOLID ALL CELLS. MECHANICALLY VIBRATE GROUT IN CELLS.
    A. GROUT HEIGHT LIMITS: APPLICABLE CODE TABLE 21-C
    B. HORIZONTAL CONSTRUCTION JOINTS: HOLD GROUT 1 1/2 INCHES BELOW TOP OF MASONRY UNIT IF WORK IS STOPPED ONE HOUR OR LONGER.
    C. GROUT COVER AROUND REINFORCING STEEL, ANCHOR BOLTS AND INSERTS PENETRATING MASONRY SHELL: 1" MINIMUM.

16. HORIZONTAL BAR TERMINATING AT WALL ENDS AND OPENING JAMS: EXTEND BARS TO WITHIN 2 INCHES OF END OF WALL AND PROVIDE STANDARD AI 90-DEGREE HOOK UNLESS DETAILED OTHERWISE.

STRUCTURAL STEEL NOTES

1. FABRICATION & ERECTION: ALL FABRICATION & ERECTION SHALL CONFORM TO THE LATEST STANDARDS OF THE AMERICAN INSTITUTE OF STEEL CONSTRUCTION (AISC) SPECIFICATIONS FOR STRUCTURAL STEEL BUILDINGS.

2. ASTM SPECIFICATIONS: STRUCTURAL STEEL SHALL CONFORM TO THE FOLLOWING ASTM SPECIFICATIONS:

TABLE 1 - STEEL MATERIAL SPECIFICATIONS

STEEL SHAPE	ASTM SPECIFICATION
W	A992 OR A572 GRADE 50
M, S, HP	A36 OR A572 GRADE 50
C - CHANNEL	A572 GRADE 50
L - ANGLE	A36
PLATES & BAR	A36
STEEL PIPE	A53 GRADE B
ROUND HSS	A500 GRADE B OR C
SQ. & RECT. HSS	A500 GRADE B OR C
MACHINE BOLTS	A325, A490, F1852, F2280
NUTS	A563, A194
WASHERS	F436
ANCHOR RODS	F1554-A36
SHEAR STUDS	A108

3. STEEL EXPOSED TO WEATHER OR CORROSIVE ENVIRONMENT: ALL STEEL EXPOSED TO WEATHER OR CORROSIVE ENVIRONMENT SHALL BE HOT DIP GALVANIZED AFTER FABRICATION IN COMPLIANCE WITH ASTM A123. ALL FIELD WELDS ON GALVANIZED STEEL SHALL BE TREATED WITH ZINC-RICH PAINT IN COMPLIANCE WITH ASTM A780.

4. STEEL FABRICATION: ALL STEEL FABRICATION SHALL BE PERFORMED IN A SHOP APPROVED BY THE GOVERNING JURISDICTION DEPARTMENT OF BUILDING & SAFETY.

5. STEEL FABRICATOR: THE STRUCTURAL STEEL FABRICATOR SHALL PROVIDE A SET OF SHOP FABRICATION DRAWINGS FOR APPROVAL TO THE ENGINEER OF RECORD. THE FABRICATOR SHALL NOT FABRICATE THE STEEL UNTIL THE ENGINEER OF RECORD HAS APPROVED THE SHOP DRAWINGS.

6. WELDING: ALL WELDING SHALL BE IN CONFORMANCE WITH THE LATEST AISC & AMERICAN WELDING SOCIETY (AWS) STANDARDS. ALL WELDING SHALL BE PERFORMED USING A SHIELDED ARC PROCESS USING APPROVED ELECTRODES CONFORMING TO AWS SPECIFICATION E70XX (LOW HYDROGEN). WELD MATERIAL SHALL COMPLY WITH AWS CERTIFICATION AND POSSESS A CHARPY V-NOTCH TOUGHNESS OF 20 FT-LBS AT -20 DEGREES F. WELDING SHALL BE PERFORMED BY ONLY AWS CERTIFIED WELDERS.

7. WELDING PROCEDURES: A WRITTEN WELDING PROCEDURE SPECIFICATIONS (WPS) PER AWS D1.1 SHALL BE DEVELOPED BY THE FABRICATOR/ERECTOR AND REVIEWED BY THE ENGINEER OF RECORD AND THE BUILDING DEPARTMENT.

8. ERECTION AIDS: THE CONTRACTOR SHALL BE RESPONSIBLE FOR ALL ERECTION AIDS AND JOINT PREPARATIONS THAT INCLUDE, BUT ARE NOT LIMITED TO, ERECTION ANGLES, LIFT HOLES AND OTHER AIDS, WELDING PROCEDURES, REQUIRED ROOT OPENINGS, ROOT FACE DIMENSIONS, GROOVE ANGLES, BACKING BARS, COPES, SURFACE ROUGHNESS AND UNEQUAL PARTS.

9. FIELD WELDING: FIELD WELDING SHALL BE PERFORMED BY A BUILDING DEPARTMENT CERTIFIED WELDERS. FIELD WELDING REQUIRES CONTINUOUS SPECIAL INSPECTION. PERIODIC FIELD SPECIAL INSPECTION IS ACCEPTABLE FOR FLOOR AND ROOF DECK WELDING, STUD WELDING & WELDING OF STAIR/HANDRAIL SYSTEMS.

10. BOLTING: BOLTING OF STRUCTURAL STEEL SHALL MEET THE RESEARCH COUNCIL ON STRUCTURAL CONNECTIONS (RCSC) 2000 EDITION SPECIFICATIONS FOR STRUCTURAL JOINTS USING A325 & A490 BOLTS FOR TYPES X, N & SC.

11. CAMBER: ALL STEEL BEAMS SHALL HAVE STANDARD MILL CAMBER UNLESS NOTED OTHERWISE ON THE STRUCTURAL PLANS.

NOT FOR BID

STK ARCHITECTURE, INC.
42095 ZEVO DR., TEMECULA, CALIFORNIA 92590-3780
Phone: 951.296.9110 Fax: 951.296.6079 Email: stk@stkinc.com

CONSULTANT:

INNOVATIVE
STRUCTURAL ENGINEERING
27369 VIA INDUSTRIA
TEMECULA, CA 92590
TELE: 951.600.0032
WWW.ISEENGINEERS.COM
SOCAL | NORCAL | COLORADO
ISE PROJECT NO.: 22-7067

PROJECT MANAGER:
SANDY FONG EXT. 1016
SANDY@ISEENGINEERS.COM

PROJECT ADMINISTERED BY:

SAN BERNARDINO COUNTY REAL ESTATE SERVICES DEPARTMENT - PROJECT MANAGEMENT DIVISION

385 N. ARROWHEAD AVE.
SAN BERNARDINO, CA 92415

PROJECT NAME:

SAN BERNARDINO COUNTY FIRE DEPARTMENT:
FIRE STATION 226

PROJECT # 10.10.1032

CIP # ______

CAFM # ______

1920 DEL ROSA AVE N.
SAN BERNARDINO,
CA 92404

ISSUE INFORMATION:

DATE:	INFORMATION:
10-03-2022	PLAN CHECK

SHEET INFORMATION:

STK PROJECT NO.: 374-154-21
SCALE: AS NOTED
DATE: SEPTEMBER 2022
PLOT DATE: 09-28-2022
DRAWING NAME:

SEAL:

REGISTERED PROFESSIONAL ENGINEER
SANDY FONG
C83965
CIVIL
STATE OF CALIFORNIA

SHEET TITLE:

STRUCTURAL NOTES

SHEET NO.:

SN2

09/28/2022 12:13PM W:\7067\02 - Drawings\Notes.dwg

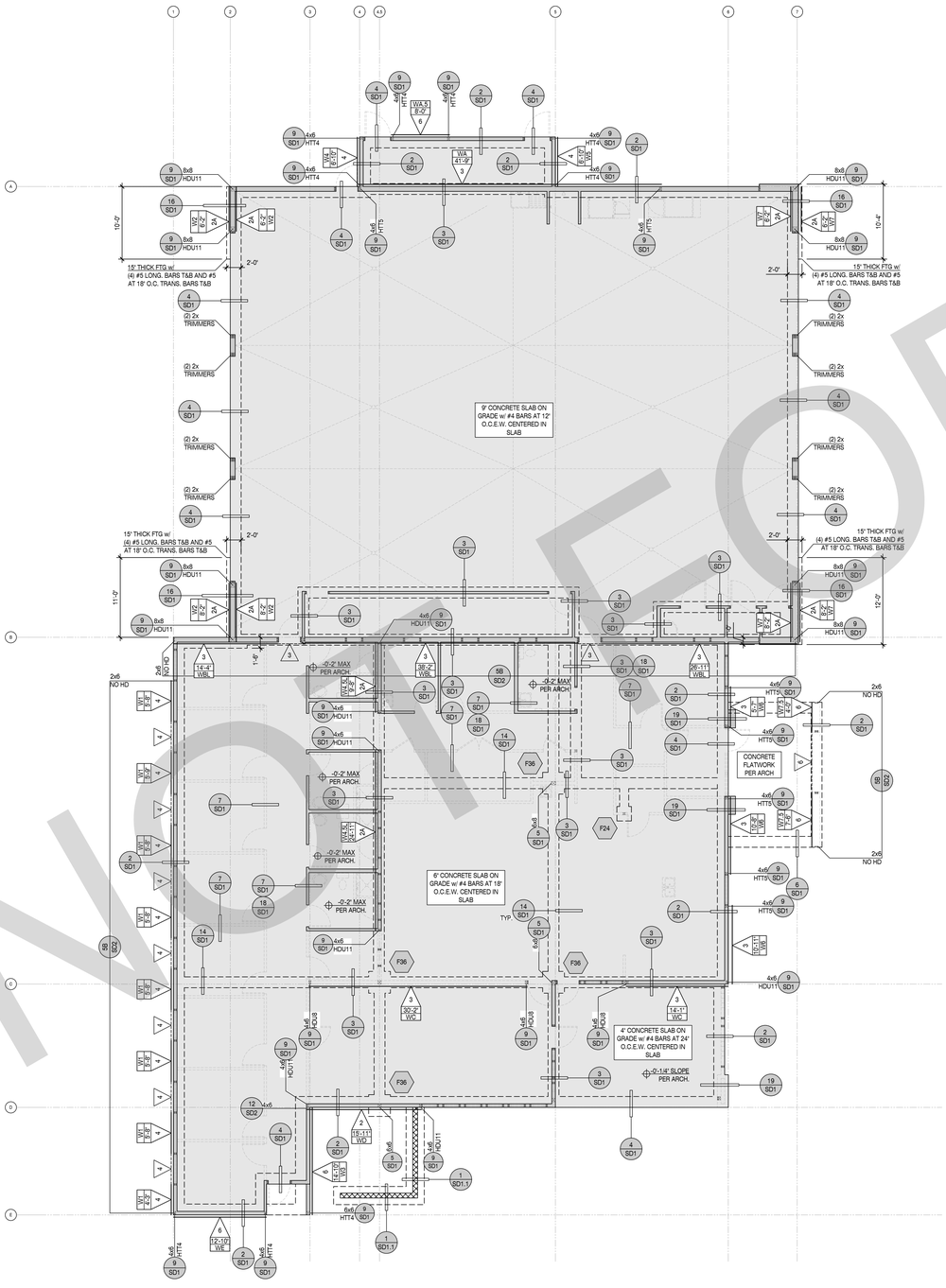

FOUNDATION PLAN

SCALE : 1/8" = 1'-0"

DO NOT SCALE PLANS FOR CONSTRUCTION DIMENSIONS. ALL CONSTRUCTION DIMENSIONS SHOULD BE VERIFIED WITH THE ARCHITECTURAL SET OF PLANS

GEOTECHNICAL INFORMATION

1. REFER TO STRUCTURAL COVER SHEET (SCS) FOR ASSUMED SOIL VALUES OR VALUES BASED ON THE PROVIDED GEOTECHNICAL (SOILS) REPORT:
2. PRIOR TO REQUESTING A BUILDING DEPARTMENT FOUNDATION INSPECTION, THE SOILS ENGINEER SHALL CERTIFY IN WRITING THAT:
   a. THE BUILDING PAD WAS PREPARED IN ACCORDANCE WITH THE RECOMMENDATIONS IN THE SOILS REPORT,
   b. THE FOOTINGS EXTEND TO THE PROPER DEPTH OR BEARING STRATA,
   c. UTILITY TRENCHES ARE PROPERLY BACKFILLED AND COMPACTED,
   d. AND THAT THE CONDITIONS FOUND MATCH THOSE ASSUMED IN THE SOILS REPORT.
3. THE OWNER/DEVELOPER AND SUBCONTRACTORS ARE TO REVIEW THE SOILS REPORT PRIOR TO COMMENCING CONSTRUCTION AND VERIFY THE PLANS COMPLY WITH THE CURRENT SOILS REPORT RECOMMENDATIONS. THE STRUCTURAL ENGINEER SHALL BE NOTIFIED IF THE SOILS REPORT DATE SHOWN ON SHEET (SCS) DOES NOT MATCH THE CURRENT REPORT DATE. THE OWNER/DEVELOPER IS RESPONSIBLE FOR UPDATING THE STRUCTURAL ENGINEER WITH CURRENT GEOTECHNICAL ENGINEERING REQUIREMENTS.

FOUNDATION NOTES

1. INSTALL HOLDOWN ANCHOR BOLTS PER 9/SD1. PROVIDE AND INSTALL ALL U.S.P. OR SIMPSON LUMBER CONNECTORS (OR EQUAL) FOUNDATION HARDWARE PER MANUFACTURERS RECOMMENDATIONS. DEEPEN FOOTING WHERE NECESSARY TO PROVIDE ANCHOR EMBEDMENT AT HOLDOWN LOCATIONS.
2. REFER TO SHEARWALL SCHEDULE 8/SD1 FOR ANCHOR BOLT SPACING AND FOR ANCHOR BOLT INSTALLATION.
3. REFER TO DETAIL PACKAGE FOR TYPICAL CONDITIONS NOT SPECIFICALLY CALLED OUT OR NOTED ON PLANS.
4. ALL DIMENSIONS SHALL BE PER THE CURRENT APPROVED STAMPED SET OF ARCHITECTURAL PLANS. OUR OFFICE SHOULD BE NOTIFIED IMMEDIATELY IF DISCREPANCIES EXIST BETWEEN THE ARCHITECTURAL & STRUCTURAL PLANS.
5. CONSTRUCT CONTINUOUS FOOTINGS AT CORNERS AND INTERSECTIONS PER DETAIL 11/SD1.
6. FOUNDATION SIZES, DEPTHS, AND REINFORCEMENT SHOULD BE COORDINATED WITH THE OWNER/DEVELOPER'S SOILS ENGINEERS REPORT. SOILS ENGINEER REPORT MAY REQUIRE ADDITIONAL ITEMS NOT NOTED ON THE STRUCTURAL PLANS.
7. CLIENT/OWNER SHALL ADDRESS CORROSIVE SOIL CONDITIONS. FOR HIGH SULFATE SOIL CONDITIONS, MITIGATE PER ACI TABLE 4.3.1. THE CLIENT/OWNER SHALL HAVE A CORROSION ENGINEER PROVIDE MITIGATION RECOMMENDATIONS FOR ALL OTHER CORROSIVE SOIL CONDITIONS. CLIENT IS RESPONSIBLE TO REVIEW STRUCTURAL PLANS AND DETAILS FOR COMPLIANCE TO CORROSION ENGINEER'S RECOMMENDATIONS PRIOR TO CONSTRUCTION.

FOUNDATION LEGEND & SYMBOLS

	CONCRETE SLAB & FOOTING. FOOTING SIZE AND REINFORCING PER DETAIL SHEET SD1
	CONCRETE CURB PER ARCH. FOOTING SIZE AND REINFORCING PER DETAIL SHEET SD1
	INDICATES: CONCRETE, CMU WALL FOOTING. FOOTING SIZE AND REINFORCING PER PLAN.
AT XX' O.C. ANCHOR /SPACING; X; XX; DETAIL #; SHEET #	INDICATES: DETAIL CUT LOCATION. REFER TO DETAIL # AND STRUCTURAL SHEET NUMBER FOR MORE INFORMATION. TEXT ABOVE BUBBLE INDICATES REVISED HARDWARE OTHER THAN NOTED IN DETAIL
END POST W/ HOLDOWN; TYPE; X; L=X; WX; LENGTH; WALL CALC ID	INDICATES: WOOD SHEAR WALL LOCATION. REFER TO DETAIL 8/SD1 FOR ANCHOR BOLT SIZE & SPACING AT EACH SHEAR WALL TYPE. PROVIDE 3" SQ x 0.229" ANGLE SLOTTED PLATE WASHERS AT EACH ANCHOR BOLT. REDUCE BOLT SPACING BY HALF AT DOUBLE SIDED SHEAR WALLS.
F##	INDICATES PAD FOOTING PER DETAIL 5/SD1 w/ REINFORCEMENT PER SPREAD FOOTING SCHEDULE.

SPREAD FOOTING SCHEDULE

FOOTING MARK	CONCRETE FOOTING SIZE		STEEL REINFORCING
	WIDTH X LENGTH	EMBEDMENT	
F24	24" x 24"	12"	(2)-#5 BARS EACH WAY AT TOP & BTM
F36	36" x 36"	12"	(3)-#5 BARS EACH WAY AT TOP & BTM

STRUCTURAL OBSERVATION REQUIREMENTS

STRUCTURAL OBSERVATION IS REQUIRED BY THE ENGINEER OF RECORD. OUR OFFICE SHOULD BE NOTIFIED TO PERFORM STRUCTURAL OBSERVATION AT THE FOLLOWING STAGES OF CONSTRUCTION:

1. PRIOR TO POUR OF CONCRETE TO OBSERVE REINFORCING & EMBEDS
2. WOOD FRAMING OBSERVATION PRIOR TO COVERING w/ FINISH & AFTER ROOF LOAD

NOT FOR BID

STK
SLT | SERVE | SAFEGUARD
42095 ZEVO DR., TEMECULA, CALIFORNIA 92590-3780
Phone: 951.296.9110 Fax: 951.296.6079 Email: stk@stkinc.com

CONSULTANT:

INNOVATIVE
STRUCTURAL ENGINEERING
27368 VIA INDUSTRIA
TEMECULA, CA 92590
TEL 951.699.6991
WWW.ISEENGINEERS.COM
SOCAL | NORCAL | COLORADO
ISE PROJECT NO.: 22-7067

PROJECT MANAGER:
SANDY FONG EXT. 1016
SANDY@ISEENGINEERS.COM

PROJECT ADMINISTERED BY:

SAN BERNARDINO COUNTY REAL ESTATE SERVICES DEPARTMENT - PROJECT MANAGEMENT DIVISION

385 N. ARROWHEAD AVE.
SAN BERNARDINO, CA 92415

PROJECT NAME:

SAN BERNARDINO COUNTY FIRE DEPARTMENT:

FIRE STATION 226

PROJECT # 10.10.1032

CIP # _____

CAFM # _____

1920 DEL ROSA AVE N.
SAN BERNARDINO,
CA 92404

ISSUE INFORMATION:

DATE:	INFORMATION:
10-03-2022	PLAN CHECK

SHEET INFORMATION:

STK PROJECT NO.:	374-154-21
SCALE:	AS NOTED
DATE:	SEPTEMBER 2022
PLOT DATE:	09-28-2022
DRAWING NAME:	

SEAL:

REGISTERED PROFESSIONAL ENGINEER
SANDY FONG
C89965
CIVIL
STATE OF CALIFORNIA

SHEET TITLE:

FOUNDATION PLAN

SHEET NO.:

S1

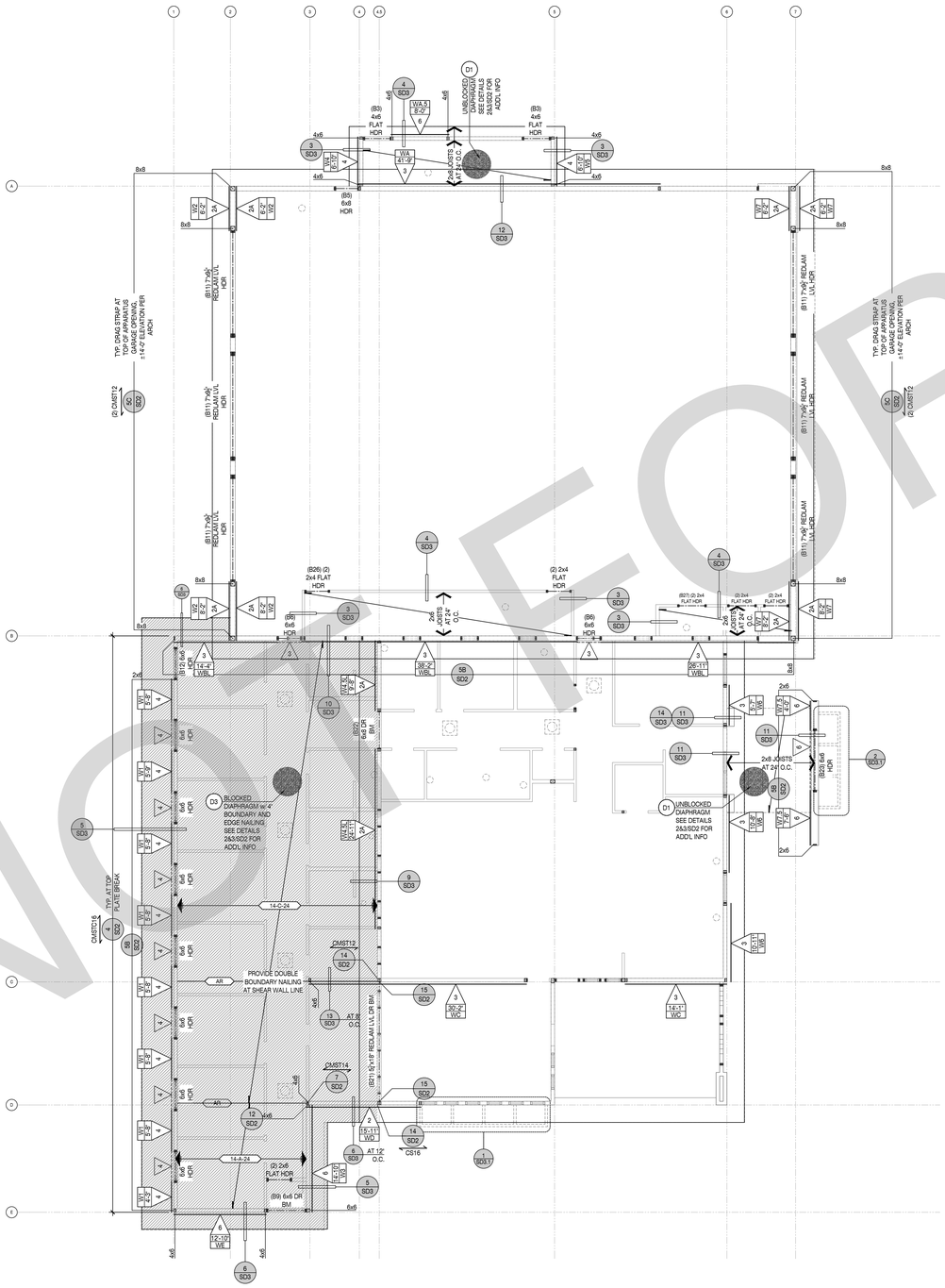

LOW ROOF FRAMING PLAN

SCALE : 1/8" = 1'-0"

DO NOT SCALE PLANS FOR CONSTRUCTION DIMENSIONS. ALL CONSTRUCTION DIMENSIONS SHOULD BE VERIFIED WITH THE ARCHITECTURAL SET OF PLANS

FRAMING NOTES

1. REFER TO STRUCTURAL GENERAL NOTE SHEET (SN SERIES) AND DETAILS (SD SERIES) FOR INFORMATION NOT SHOWN ON THE MAIN FRAMING PLANS.
2. REFER TO MAIN FRAMING PLAN FOR ALL INFORMATION NOT SHOWN ON THE ALTERNATE ELEVATIONS AND OPTIONS.
3. FRAMER & TRUSS MANUFACTURER TO COORDINATE JOIST AND TRUSS SPACING WITH M.E.P. DESIGNS. FRAMER TO REVIEW MECH. AND ELECTRIC PLANS BEFORE FINAL PLACEMENT OF JOISTS AND/OR TRUSSES. WHERE ALIGNED JOIST AND/OR TRUSS INTERFERES w/ FUTURE INSTALLATION OF M.E.P. INSTALLATION, CONTACT STRUCTURAL ENGINEER.
4. SPLICE ALL EXTERIOR WALL AND INTERIOR SHEAR WALL TOP PLATE BREAKS PER DETAIL 4/SD2, TYP.
5. ROOF SHOULD BE FULLY LOADED PRIOR TO NAILING THE TOP PLATE HARDWARE TO ROOF TRUSS BOTTOM CHORD.

FRAMING LEGEND & SYMBOLS

AT XX" O.C. REQUIRED ANCHOR/SPACING; XX DETAIL #; SHEET #	INDICATES DETAIL CUT LOCATION. REFER TO DETAIL # AND STRUCTURAL SHEET NUMBER FOR MORE INFORMATION. TEXT ABOVE BUBBLE INDICATES REVISED HARDWARE OTHER THAN NOTED IN DETAIL
	INDICATES 2x6 STUD WALL PER PLAN & DETAIL 5/SD2. COORDINATE STUD WALL SIZE WITH ARCH. PLANS.
	INDICATES 2x8 STUD WALL PER PLAN & DETAIL 5/SD2. COORDINATE STUD WALL SIZE WITH ARCH. PLANS.
XX	INDICATES: 1. WALL OPENING HEADER PER FRAMING SCHEDULE BELOW 2. PROVIDE (1) 2x TRIMMER EACH SIDE U.N.O. ON PLAN 3. PROVIDE KING STUDS EACH SIDE PER DETAIL 5/SD2 U.N.O. ON PLAN.
XX; HU BM TO BM HGR TYP., U.N.O, PER PLAN AS OCCURS. USE CONCEALED FLANGE HGR AS NEEDED	INDICATES: 1. BEAM AS NOTED ON PLANS 2. PROVIDE BEARING STUDS OR POST EACH END TO MATCH WIDTH OF BEAM AND SUPPORT WALL , U.N.O. 3. (1) 2x WALL STUD ALIGNED AT 1 ½" WIDE LSL BEAMS IS ACCEPTABLE 4. BEAM SHOULD BE INSTALLED WITH BOTTOM ON TOP PLATE U.N.O.
D4	INDICATES: BLOCKED ROOF SHEATHING LOCATIONS (HATCHED AREA) PER DETAILS 2 & 3/SD2, TYPICAL
JOIST DEPTH (IN.); JOIST SPAC. (IN. O.C.); XX-XX-XX; JOIST TYPE (SEE SHT. SN1)	INDICATES ROOF I-JOIST SPAN, DIRECTION, DEPTH, SPACING AND TYPE OF FLOOR I-JOISTS PER TABLE AT RIGHT. REFER TO 'ROOF JOIST SPECIFICATIONS' ON SHEET SN1 FOR MANUF ALT
AR	INDICATES ALIGNED ROOF RAFTER W/ ROOF DIAPHRAGM BOUNDARY NAILING
	INDICATES SPAN AND DIRECTION OF SAWN LUMBER ROOF RAFTERS. RAFTER SIZE AND SPACING PER PLAN
END POST W/ HOLDOWN; TYPE; X; L=X; WX; LENGTH; WALL CALC ID	INDICATES: 1. WOOD SHEAR WALL PANEL LOCATION PER PLAN INSTALLED FULL HEIGHT OF WALL 2. REFER TO DETAIL 1/SD2 SHEAR WALL SCHEDULE FOR ADDITIONAL REQUIREMENTS 3. PROVIDE POST AND STRAP/HOLDOWN EACH END OF WALL MIN AS INDICATED PER PLAN 4. AT UPPER FLOORS WHERE WALL SHEATHING DOES NOT EXTEND AND EDGE NAIL TO FLOOR RIM PROVIDE SILL PLATE NAILING OR SCREWS PER DETAIL 1/SD2
INDICATES SHEAR TYPE ABV & BLW OPENING; END POST W/ HOLDOWN; TYPE; LENGTH; WALL CALC ID; XXXX; INDICATES HORIZ. STRAP ABV & BLW OPENING	INDICATES: 1. WOOD SHEAR WALL PANEL LOCATION PER PLAN INSTALLED FULL HEIGHT OF WALL AND SHEAR PANEL ABOVE AND BELOW OPENING 2. REFER TO DETAIL 1/SD2 SHEAR WALL SCHEDULE FOR ADDITIONAL REQUIREMENTS 3. PROVIDE POST AND STRAP/HOLDOWN EACH END OF WALL MIN AS INDICATED PER PLAN 4. AT UPPER FLOORS WHERE WALL SHEATHING DOES NOT EXTEND AND EDGE NAIL TO FLOOR RIM PROVIDE SILL PLATE NAILING OR SCREWS PER DETAIL 1/SD2 5. REFER TO DETAIL 8B/SD2 FOR PERFORATED SHEAR WALL CONDITION (SHEAR ABV AND BLW OPENING W/O STRAP) 6. REFER TO DETAIL 5C/SD2 FOR FORCE TRANSFER SHEAR WALL CONDITION (SHEAR ABV AND BLW OPENING W/ STRAP)
TENSION STRAP L=X'-XX"	INDICATES: DRAG TIE STRAP TO ROOF BLKG LENGTH SHOWN INDICATES STRAP LENGTH OFF WALL
	INDICATES: DRAG TIE STRAP PER PLAN OR DETAIL SHOWN ON PLANS.
MF X	INDICATES STEEL MOMENT FRAMES AS OCCURS PER PLAN. MOMENT FRAME ELEVATIONS TO BE PROVIDED AFTER ARCHITECTURAL COORDINATION/APPROVAL.
	INDICATES WIDE FLANGE AS OCCURS PER PLAN.

I-JOIST SPECIFICATIONS			
TYPE	MANF	TYPE	SIZE - DEPTH (IN)
A	REDBUILT	I45	14
B	REDBUILT	I65	14
C	REDBUILT	I90	14

STRUCTURAL OBSERVATION REQUIREMENTS

STRUCTURAL OBSERVATION IS REQUIRED BY THE ENGINEER OF RECORD. OUR OFFICE SHOULD BE NOTIFIED TO PERFORM STRUCTURAL OBSERVATION AT THE FOLLOWING STAGES OF CONSTRUCTION:

1. PRIOR TO POUR OF CONCRETE TO OBSERVE REINFORCING & EMBEDS
2. WOOD FRAMING OBSERVATION PRIOR TO COVERING w/ FINISH & AFTER ROOF LOAD

NOT FOR BID

STK
ALL RIGHTS RESERVED 2021
42095 ZEVO DR., TEMECULA, CALIFORNIA 92590-3780
Phone: 951.296.9110 Fax: 951.296.6079 Email: stk@stkinc.com

CONSULTANT:

INNOVATIVE
STRUCTURAL ENGINEERS
27368 VIA INDUSTRIA
TEMECULA, 92590
T E L E P H O N E
WWW.ISEENGINEERS.COM
SOCAL | NORCAL | COLORADO
ISE PROJECT NO.: 22-7067

PROJECT MANAGER:
SANDY FONG EXT. 1016
SANDY@ISEENGINEERS.COM

PROJECT ADMINISTERED BY:

SAN BERNARDINO COUNTY REAL ESTATE SERVICES DEPARTMENT - PROJECT MANAGEMENT DIVISION

385 N. ARROWHEAD AVE.
SAN BERNARDINO, CA 92415

PROJECT NAME:

SAN BERNARDINO COUNTY FIRE DEPARTMENT:

FIRE STATION 226

PROJECT # 10.10.1032

CIP # _____

CAFM # _____

1920 DEL ROSA AVE N.
SAN BERNARDINO,
CA 92404

ISSUE INFORMATION:

DATE:	INFORMATION:
10-03-2022	PLAN CHECK

SHEET INFORMATION:

STK PROJECT NO.: 374-154-21
SCALE: AS NOTED
DATE: SEPTEMBER 2022
PLOT DATE: 09-28-2022
DRAWING NAME:

SEAL:

REGISTERED PROFESSIONAL ENGINEER
SANDY FONG
C36965
CIVIL
STATE OF CALIFORNIA

SHEET TITLE:

LOW ROOF FRAMING PLAN

SHEET NO.:

S2

File: 374-154-21 Plan Set.dwg - 09/28/2022 - 10:47 AM
Plot Date: 12/20/2022

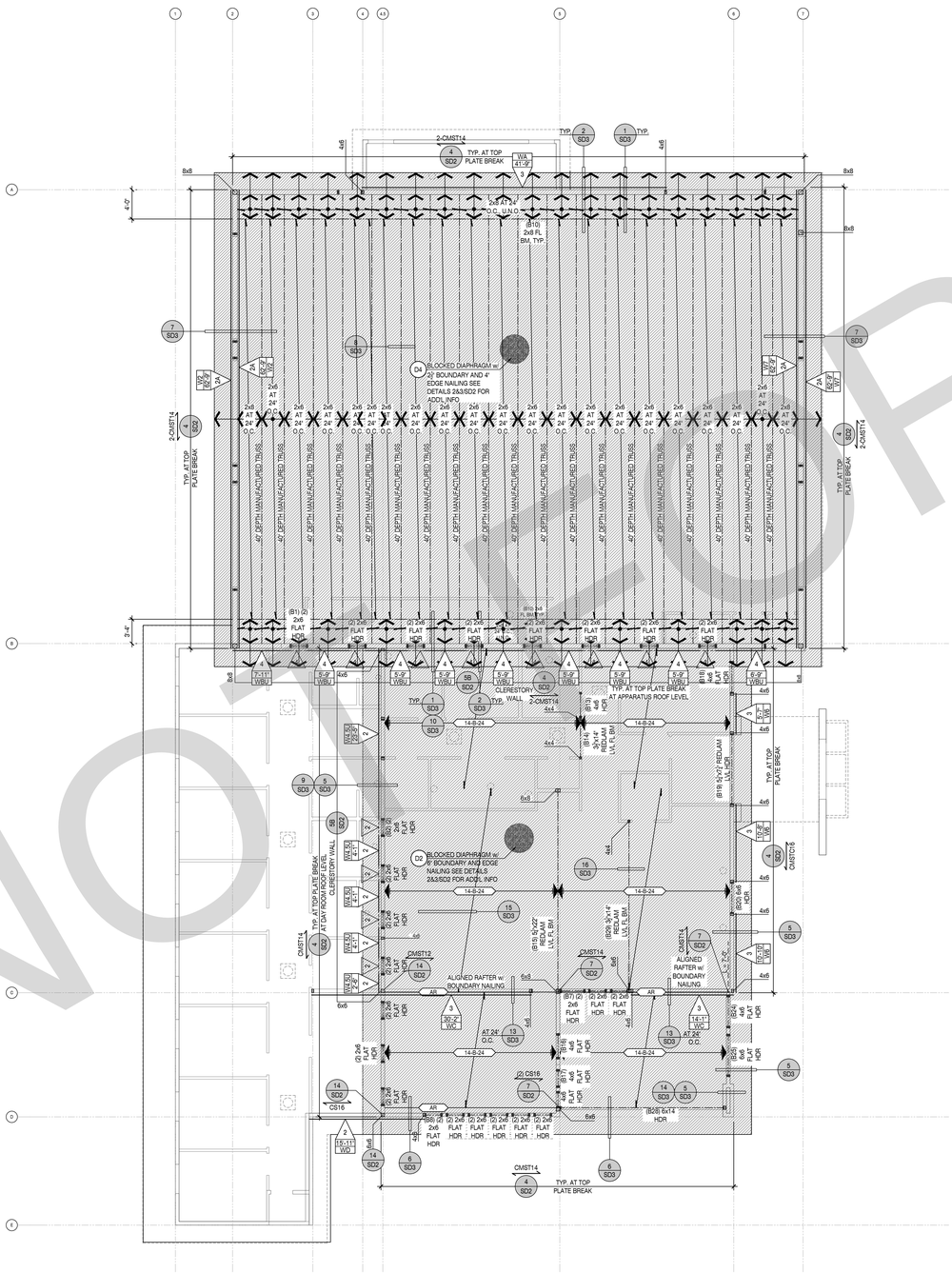

HIGH / CLERESTORY ROOF FRAMING PLAN

SCALE : 1/8" = 1'-0"

DO NOT SCALE PLANS FOR CONSTRUCTION DIMENSIONS. ALL CONSTRUCTION DIMENSIONS SHOULD BE VERIFIED WITH THE ARCHITECTURAL SET OF PLANS

FRAMING NOTES

1. REFER TO STRUCTURAL GENERAL NOTE SHEET (SN SERIES) AND DETAILS (SD SERIES) FOR INFORMATION NOT SHOWN ON THE MAIN FRAMING PLANS.
2. REFER TO MAIN FRAMING PLAN FOR ALL INFORMATION NOT SHOWN ON THE ALTERNATE ELEVATIONS AND OPTIONS.
3. FRAMER & TRUSS MANUFACTURER TO COORDINATE JOIST AND TRUSS SPACING WITH M.E.P. DESIGNS. FRAMER TO REVIEW MECH. AND ELECTRIC PLANS BEFORE FINAL PLACEMENT OF JOISTS AND/OR TRUSSES. WHERE ALIGNED JOIST AND/OR TRUSS INTERFERES w/ FUTURE INSTALLATION OF M.E.P. INSTALLATION, CONTACT STRUCTURAL ENGINEER.
4. SPLICE ALL EXTERIOR WALL AND INTERIOR SHEAR WALL TOP PLATE BREAKS PER DETAIL 4/SD2, TYP.
5. ROOF SHOULD BE FULLY LOADED PRIOR TO NAILING THE TOP PLATE HARDWARE TO ROOF TRUSS BOTTOM CHORD.

FRAMING LEGEND & SYMBOLS

AT XX" O.C. — REQUIRED ANCHOR/SPACING; X/XX — DETAIL # / SHEET #	INDICATES DETAIL CUT LOCATION. REFER TO DETAIL # AND STRUCTURAL SHEET NUMBER FOR MORE INFORMATION. TEXT ABOVE BUBBLE INDICATES REVISED HARDWARE OTHER THAN NOTED IN DETAIL
	INDICATES 2x6 STUD WALL PER PLAN & DETAIL 5/SD2. COORDINATE STUD WALL SIZE WITH ARCH. PLANS.
	INDICATES 2x8 STUD WALL PER PLAN & DETAIL 5/SD2. COORDINATE STUD WALL SIZE WITH ARCH. PLANS.
XX	INDICATES: 1. WALL OPENING HEADER PER FRAMING SCHEDULE BELOW 2. PROVIDE (1) 2x TRIMMER EACH SIDE U.N.O. ON PLAN 3. PROVIDE KING STUDS EACH SIDE PER DETAIL 5/SD2 U.N.O. ON PLAN.
XX — HU BM TO BM HGR TYP., U.N.O. PER PLAN AS OCCURS. USE CONCEALED FLANGE HGR AS NEEDED	INDICATES: 1. BEAM AS NOTED ON PLANS 2. PROVIDE BEARING STUDS OR POST EACH END TO MATCH WIDTH OF BEAM AND SUPPORT WALL , U.N.O. 3. (1) 2x WALL STUD ALIGNED AT 1 ¾" WIDE LSL BEAMS IS ACCEPTABLE 4. BEAM SHOULD BE INSTALLED WITH BOTTOM ON TOP PLATE U.N.O.
D4	INDICATES: BLOCKED ROOF SHEATHING LOCATIONS (HATCHED AREA) PER DETAILS 2 & 3/SD2, TYPICAL
JOIST DEPTH (IN.) — JOIST SPAC. (IN. O.C.) — XX-XX-XX — JOIST TYPE (SEE SHT. SN1)	INDICATES ROOF I-JOIST SPAN, DIRECTION, DEPTH, SPACING AND TYPE OF FLOOR I-JOISTS PER TABLE AT RIGHT. REFER TO "ROOF JOIST SPECIFICATIONS" ON SHEET SN1 FOR MANUF ALT
AR	INDICATES ALIGNED ROOF RAFTER W/ ROOF DIAPHRAGM BOUNDARY NAILING
	INDICATES SPAN AND DIRECTION OF SAWN LUMBER ROOF RAFTERS. RAFTER SIZE AND SPACING PER PLAN
END POST W/ HOLDOWN; TYPE — X; WALL CALC ID — L-X / WX — LENGTH	INDICATES: 1. WOOD SHEAR WALL PANEL LOCATION PER PLAN INSTALLED FULL HEIGHT OF WALL 2. REFER TO DETAIL 1/SD2 SHEAR WALL SCHEDULE FOR ADDITIONAL REQUIREMENTS 3. PROVIDE POST AND STRAP/HOLDOWN EACH END OF WALL MIN AS INDICATED PER PLAN 4. AT UPPER FLOORS WHERE WALL SHEATHING DOES NOT EXTEND AND EDGE NAIL TO FLOOR RIM PROVIDE SILL PLATE NAILING OR SCREWS PER DETAIL 1/SD2
INDICATES SHEAR TYPE ABV & BLW OPENING — END POST W/ HOLDOWN; TYPE — X; LENGTH — L-X; WALL CALC ID — Wx; XXXX — INDICATES HORIZ. STRAP ABV & BLW OPENING	INDICATES: 1. WOOD SHEAR WALL PANEL LOCATION PER PLAN INSTALLED FULL HEIGHT OF WALL AND SHEAR PANEL ABOVE AND BELOW OPENING 2. REFER TO DETAIL 1/SD2 SHEAR WALL SCHEDULE FOR ADDITIONAL REQUIREMENTS 3. PROVIDE POST AND STRAP/HOLDOWN EACH END OF WALL MIN AS INDICATED PER PLAN 4. AT UPPER FLOORS WHERE WALL SHEATHING DOES NOT EXTEND AND EDGE NAIL TO FLOOR RIM PROVIDE SILL PLATE NAILING OR SCREWS PER DETAIL 1/SD2 5. REFER TO DETAIL 5B/SD2 FOR PERFORATED SHEAR WALL CONDITION (SHEAR ABV AND BLW OPENING W/O STRAP) 6. REFER TO DETAIL 5C/SD2 FOR FORCE TRANSFER SHEAR WALL CONDITION (SHEAR ABV AND BLW OPENING W/ STRAP)
TENSION STRAP L=X'-XX"	INDICATES: DRAG TIE STRAP TO ROOF BLKG LENGTH SHOWN INDICATES STRAP LENGTH OFF WALL
	INDICATES: DRAG TIE STRAP PER PLAN OR DETAIL SHOWN ON PLANS.
MF X	INDICATES STEEL MOMENT FRAMES AS OCCURS PER PLAN. MOMENT FRAME ELEVATIONS TO BE PROVIDED AFTER ARCHITECTURAL COORDINATION/APPROVAL.
	INDICATES WIDE FLANGE AS OCCURS PER PLAN.

I-JOIST SPECIFICATIONS			
TYPE	MANF	TYPE	SIZE - DEPTH (IN)
A	REDBUILT	I45	14
B	REDBUILT	I65	14
C	REDBUILT	I90	14

STRUCTURAL OBSERVATION REQUIREMENTS

STRUCTURAL OBSERVATION IS REQUIRED BY THE ENGINEER OF RECORD. OUR OFFICE SHOULD BE NOTIFIED TO PERFORM STRUCTURAL OBSERVATION AT THE FOLLOWING STAGES OF CONSTRUCTION:

1. PRIOR TO POUR OF CONCRETE TO OBSERVE REINFORCING & EMBEDS
2. WOOD FRAMING OBSERVATION PRIOR TO COVERING w/ FINISH & AFTER ROOF LOAD

NOT FOR BID

STK
ALL RIGHTS RESERVED © 2022
42095 ZEVO DR., TEMECULA, CALIFORNIA 92590-3780
Phone: 951.296.9110 Fax: 951.296.6079 Email: stk@stkinc.com

CONSULTANT:

INNOVATIVE STRUCTURAL ENGINEERING
27368 VIA INDUSTRIA
TEMECULA, 92590
TEL 951.676.9097
WWW.ISEENGINEERS.COM
SOCAL | NORCAL | COLORADO
ISE PROJECT NO.: 22-7067

PROJECT MANAGER:
SANDY FONG EXT. 1016
SANDY@ISEENGINEERS.COM

PROJECT ADMINISTERED BY:

SAN BERNARDINO COUNTY REAL ESTATE SERVICES DEPARTMENT - PROJECT MANAGEMENT DIVISION

385 N. ARROWHEAD AVE.
SAN BERNARDINO, CA 92415

PROJECT NAME:

SAN BERNARDINO COUNTY FIRE DEPARTMENT:

FIRE STATION 226

PROJECT # 10.10.1032

CIP # _____

CAFM # _____

1920 DEL ROSA AVE N.
SAN BERNARDINO,
CA 92404

ISSUE INFORMATION:

DATE:	INFORMATION:
10-03-2022	PLAN CHECK

SHEET INFORMATION:

STK PROJECT NO.:	374-154-21
SCALE:	AS NOTED
DATE:	SEPTEMBER 2022
PLOT DATE:	09-28-2022
DRAWING NAME:	

SEAL:

REGISTERED PROFESSIONAL ENGINEER — SANDY FONG — C89965 — CIVIL — STATE OF CALIFORNIA

SHEET TITLE:

HIGH / CLERESTORY ROOF FRAMING PLAN

SHEET NO.:

S3

Sep 28 Wed,pw:\\ise-pw\Project\2 - CALIFORNIA\
File:S3.12 2022\S3\S3

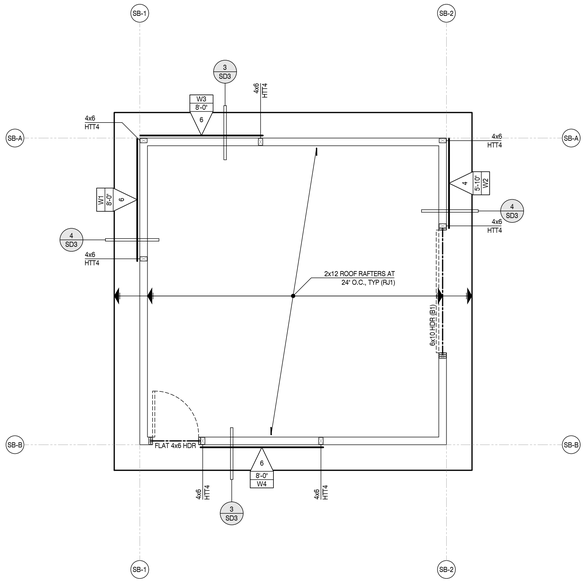

STORAGE BUILIDNG (SB) - ROOF FRAMING PLAN

SCALE : 1/4" = 1'-0"

DO NOT SCALE PLANS FOR CONSTRUCTION DIMENSIONS. ALL CONSTRUCTION DIMENSIONS SHOULD BE VERIFIED WITH THE ARCHITECTURAL SET OF PLANS

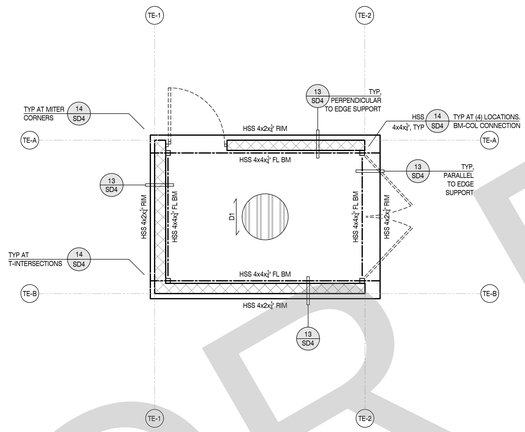

TRASH ENCLOSURE (TE) - ROOF FRAMING PLAN

SCALE : 1/4" = 1'-0"

DO NOT SCALE PLANS FOR CONSTRUCTION DIMENSIONS. ALL CONSTRUCTION DIMENSIONS SHOULD BE VERIFIED WITH THE ARCHITECTURAL SET OF PLANS

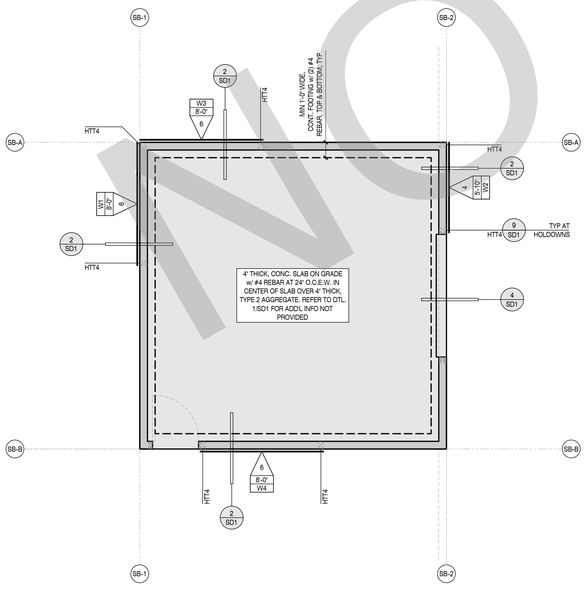

STORAGE BUILIDNG (SB) - FOUNDATION PLAN

SCALE : 1/4" = 1'-0"

DO NOT SCALE PLANS FOR CONSTRUCTION DIMENSIONS. ALL CONSTRUCTION DIMENSIONS SHOULD BE VERIFIED WITH THE ARCHITECTURAL SET OF PLANS

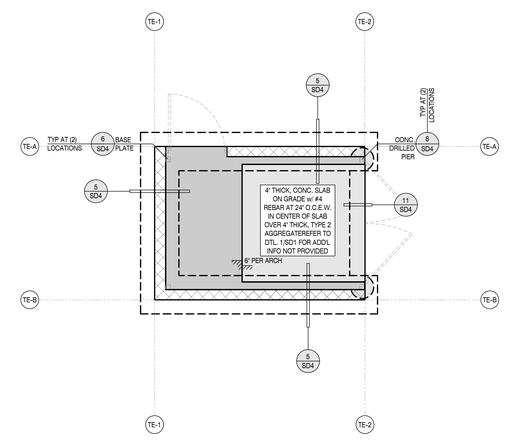

TRASH ENCLOSURE (TE) - FOUNDATION PLAN

SCALE : 1/4" = 1'-0"

DO NOT SCALE PLANS FOR CONSTRUCTION DIMENSIONS. ALL CONSTRUCTION DIMENSIONS SHOULD BE VERIFIED WITH THE ARCHITECTURAL SET OF PLANS

FRAMING NOTES

1. REFER TO STRUCTURAL GENERAL NOTE SHEET (SN SERIES) AND DETAILS (SD SERIES) FOR INFORMATION NOT SHOWN ON THE MAIN FRAMING PLANS.
2. FRAMER TO COORDINATE JOIST SPACING WITH M.E.P. DESIGNS. FRAMER TO REVIEW MECH. AND ELECTRIC PLANS BEFORE FINAL PLACEMENT OF JOISTS. WHERE ALIGNED JOIST INTERFERES w/ FUTURE INSTALLATION OF M.E.P. INSTALLATION, CONTACT STRUCTURAL ENGINEER.
3. SPLICE ALL EXTERIOR WALL AND INTERIOR SHEAR WALL TOP PLATE BREAKS PER DETAIL 4/SD2, TYP.
4. ROOF SHOULD BE FULLY LOADED PRIOR TO NAILING THE TOP PLATE HARDWARE TO ROOF JOIST BOTTOM CHORD.
5. WATERPROOFING & DRAINAGE SHALL BE PROVIDED BY OTHERS.

FRAMING LEGEND & SYMBOLS

REQUIRED ANCHOR/SPACING; AT XX" O.C.; X; XX; DETAIL #; SHEET #	INDICATES DETAIL CUT LOCATION. REFER TO DETAIL # AND STRUCTURAL SHEET NUMBER FOR MORE INFORMATION. TEXT ABOVE BUBBLE INDICATES REVISED HARDWARE OTHER THAN NOTED IN DETAIL
	INDICATES 2x6 STUD WALL PER PLAN & DETAIL 5/SD2. COORDINATE STUD WALL SIZE WITH ARCH. PLANS.
	INDICATES: 8" CMU (f'm = 1500 psi) WALL WITH #4 AT 16" O.C. VERTICAL & #4 AT 24" O.C. HORIZONTAL WITH SOLID GROUT. REFER TO PLANS & DETAILS FOR ADDL INFORMATION .
XX	INDICATES: 1. WALL OPENING HEADER PER FRAMING SCHEDULE BELOW 2. PROVIDE (1) 2x TRIMMER EACH SIDE U.N.O. ON PLAN 3. PROVIDE KING STUDS EACH SIDE PER DETAIL 5/SD2 U.N.O. ON PLAN.
AR	INDICATES ALIGNED ROOF RAFTER W/ ROOF DIAPHRAGM EDGE NAILING
	INDICATES SPAN AND DIRECTION OF ROOF RAFTERS. RAFTER SIZE AND SPACING PER PLANS.
XX	INDICATES: 1. BEAM AS NOTED ON PLANS
D1; INDICATES METAL DECK SPAN & TYPE; INDICATES METAL DECK DIAPHRAGM	INDICATES METAL ROOF DECK PER PLAN. REFER TO DETAIL 12/SD4 FOR ADDITIONAL INFORMATION INCLUDING DECK TYPES.
END POST W/ HOLDOWN; TYPE; X; L=X; WX; LENGTH; WALL CALC ID	INDICATES: 1. WOOD SHEAR WALL PANEL LOCATION PER PLAN INSTALLED FULL HEIGHT OF WALL 2. REFER TO DETAIL 1/SD2 SHEAR WALL SCHEDULE FOR ADDITIONAL REQUIREMENTS 3. PROVIDE POST AND STRAP/HOLDOWN EACH END OF WALL MIN AS INDICATED PER PLAN 4. AT UPPER FLOORS WHERE WALL SHEATHING DOES NOT EXTEND AND EDGE NAIL TO FLOOR RIM PROVIDE SILL PLATE NAILING OR SCREWS PER DETAIL 1/SD2
INDICATES SHEAR TYPE ABV & BLW OPENING; END POST W/ HOLDOWN; TYPE; LENGTH; WALL CALC ID; XXXX; INDICATES HORIZ. STRAP ABV & BLW OPENING	INDICATES: 1. WOOD SHEAR WALL PANEL LOCATION PER PLAN INSTALLED FULL HEIGHT OF WALL AND SHEAR PANEL ABOVE AND BELOW OPENING 2. REFER TO DETAIL 1/SD2 SHEAR WALL SCHEDULE FOR ADDITIONAL REQUIREMENTS 3. PROVIDE POST AND STRAP/HOLDOWN EACH END OF WALL MIN AS INDICATED PER PLAN 4. AT UPPER FLOORS WHERE WALL SHEATHING DOES NOT EXTEND AND EDGE NAIL TO FLOOR RIM PROVIDE SILL PLATE NAILING OR SCREWS PER DETAIL 1/SD2 5. REFER TO DETAIL 5B/SD2 FOR PERFORATED SHEAR WALL CONDITION (SHEAR ABV AND BLW OPENING W/O STRAP) 6. REFER TO DETAIL 5C/SD2 FOR FORCE TRANSFER SHEAR WALL CONDITION (SHEAR ABV AND BLW OPENING W/ STRAP)
	INDICATES: DRAG TIE STRAP PER PLAN OR DETAIL SHOWN ON PLANS.

GEOTECHNICAL INFORMATION

1. REFER TO STRUCTURAL COVER SHEET (SCS) FOR ASSUMED SOIL VALUES OR VALUES BASED ON THE PROVIDED GEOTECHNICAL (SOILS) REPORT:
2. THE OWNER/DEVELOPER AND SUBCONTRACTORS ARE TO REVIEW THE SOILS REPORT PRIOR TO COMMENCING CONSTRUCTION AND VERIFY THE PLANS COMPLY WITH THE CURRENT SOILS REPORT RECOMMENDATIONS. THE STRUCTURAL ENGINEER SHALL BE NOTIFIED IF THE SOILS REPORT DATE SHOWN ON SHEET (SCS) DOES NOT MATCH THE CURRENT REPORT DATE. THE OWNER/DEVELOPER IS RESPONSIBLE FOR UPDATING THE STRUCTURAL ENGINEER WITH CURRENT GEOTECHNICAL ENGINEERING REQUIREMENTS.

FOUNDATION NOTES

1. INSTALL HOLDOWN ANCHOR BOLTS PER 9/SD1. PROVIDE AND INSTALL ALL U.S.P. OR SIMPSON LUMBER CONNECTORS (OR EQUAL) FOUNDATION HARDWARE PER MANUFACTURERS RECOMMENDATIONS. DEEPEN FOOTING WHERE NECESSARY TO PROVIDE ANCHOR EMBEDMENT AT HOLDOWN LOCATIONS.
2. REFER TO SHEARWALL SCHEDULE 8/SD1 FOR ANCHOR BOLT SPACING AND FOR ANCHOR BOLT INSTALLATION.
3. REFER TO DETAIL PACKAGE FOR TYPICAL CONDITIONS NOT SPECIFICALLY CALLED OUT OR NOTED ON PLANS.
4. ALL DIMENSIONS SHALL BE PER THE CURRENT APPROVED STAMPED SET OF ARCHITECTURAL PLANS. OUR OFFICE SHOULD BE NOTIFIED IMMEDIATELY IF DISCREPANCIES EXIST BETWEEN THE ARCHITECTURAL & STRUCTURAL PLANS.
5. CONSTRUCT CONTINUOUS FOOTINGS AT CORNERS AND INTERSECTIONS PER DETAIL 11/SD1.
6. CENTER CONTINUOUS FOOTINGS UNDER WALLS U.N.O. CENTER DRILLED PIER FOOTINGS UNDER COLUMNS U.N.O.
7. FOUNDATION SIZES, DEPTHS, AND REINFORCEMENT SHOULD BE COORDINATED WITH THE OWNER/DEVELOPER'S SOILS ENGINEERS REPORT. SOILS ENGINEER REPORT MAY REQUIRE ADDITIONAL ITEMS NOT NOTED ON THE STRUCTURAL PLANS.
8. CLIENT/OWNER SHALL ADDRESS CORROSIVE SOIL CONDITIONS. FOR HIGH SULFATE SOIL CONDITIONS, MITIGATE PER ACI TABLE 19.3.2.1. THE CLIENT/OWNER SHALL HAVE A CORROSION ENGINEER PROVIDE MITIGATION RECOMMENDATIONS FOR ALL OTHER CORROSIVE SOIL CONDITIONS. CLIENT IS RESPONSIBLE TO REVIEW STRUCTURAL PLANS AND DETAILS FOR COMPLIANCE TO CORROSION ENGINEER'S RECOMMENDATIONS PRIOR TO CONSTRUCTION.
9. IN NO CASE SHALL PIPES, CONDUITS, OR SLEEVES BE EMBEDDED IN SPREAD FOOTINGS UNLESS SPECIFICALLY DETAILED ON THE STRUCTURAL DRAWINGS.

FOUNDATION LEGEND & SYMBOLS

	CONCRETE SLAB & FOOTING. FOOTING SIZE AND REINFORCING PER DETAIL SHEET SD1, U.N.O. PER PLAN.
	INDICATES: CONCRETE, CMU WALL FOOTING. FOOTING SIZE AND REINFORCING PER DETAIL SHEET SD4, U.N.O. PER PLAN.
	INDICATES: CONCRETE, DRILLED PIER FOOTING. FOOTING SIZE AND REINFORCING PER DETAIL SHEET SD4, U.N.O. PER PLAN.
ANCHOR /SPACING; AT XX" O.C.; X; XX; DETAIL #; SHEET #	INDICATES: DETAIL CUT LOCATION. REFER TO DETAIL # AND STRUCTURAL SHEET NUMBER FOR MORE INFORMATION. TEXT ABOVE BUBBLE INDICATES REVISED HARDWARE OTHER THAN NOTED IN DETAIL
END POST W/ HOLDOWN; TYPE; X; L=X; WX; LENGTH; WALL CALC ID; END POST W/ HOLDOWN; TYPE; LENGTH; WALL CALC ID; XXXX	INDICATES: WOOD SHEAR WALL LOCATION. REFER TO DETAIL 8/SD1 FOR ANCHOR BOLT SIZE & SPACING AT EACH SHEAR WALL TYPE. PROVIDE 3" SQ x 0.229" ANGLE SLOTTED PLATE WASHERS AT EACH ANCHOR BOLT. REDUCE BOLT SPACING BY HALF AT DOUBLE SIDED SHEAR WALLS.

STRUCTURAL OBSERVATION REQUIREMENTS

STRUCTURAL OBSERVATION IS REQUIRED BY THE ENGINEER OF RECORD. OUR OFFICE SHOULD BE NOTIFIED TO PERFORM STRUCTURAL OBSERVATION AT THE FOLLOWING STAGES OF CONSTRUCTION:

1. PRIOR TO POUR OF CONCRETE TO OBSERVE REINFORCING & EMBEDS
2. WOOD FRAMING OBSERVATION PRIOR TO COVERING w/ FINISH & AFTER ROOF LOAD

STK
42095 ZEVO DR., TEMECULA, CALIFORNIA 92590-3780
Phone: 951.296.9110 Fax: 951.296.6079 Email: stk@stkinc.com

CONSULTANT:

INNOVATIVE
STRUCTURAL ENGINEERING
27368 VIA INDUSTRIA
TEMECULA, CA 92590
WWW.ISEENGINEERS.COM
SOCAL | NORCAL | COLORADO
ISE PROJECT NO.: 22-7067

PROJECT MANAGER:
SANDY FONG EXT. 1016
SANDY@ISEENGINEERS.COM

PROJECT ADMINISTERED BY:
SAN BERNARDINO COUNTY
REAL ESTATE SERVICES
DEPARTMENT -
PROJECT MANAGEMENT
DIVISION

385 N. ARROWHEAD AVE.
SAN BERNARDINO, CA 92415

PROJECT NAME:
SAN BERNARDINO
COUNTY FIRE
DEPARTMENT:
FIRE STATION 226

PROJECT # 10.10.1032

CIP # _____

CAFM # _____

1920 DEL ROSA AVE N.
SAN BERNARDINO,
CA 92404

ISSUE INFORMATION:

DATE:	INFORMATION:
10-03-2022	PLAN CHECK

SHEET INFORMATION:

STK PROJECT NO.:	374-154-21
SCALE:	AS NOTED
DATE:	SEPTEMBER 2022
PLOT DATE:	09-28-2022
DRAWING NAME:	

SEAL:

REGISTERED PROFESSIONAL ENGINEER
SANDY FONG
C85965
CIVIL
STATE OF CALIFORNIA

SHEET TITLE:
SITE STRUCTURES, STORAGE BUILDING & TRASH ENCLOSURE - ROOF FRAMING & FOUNDATION PLANS

SHEET NO.:
S4

NOT FOR BID

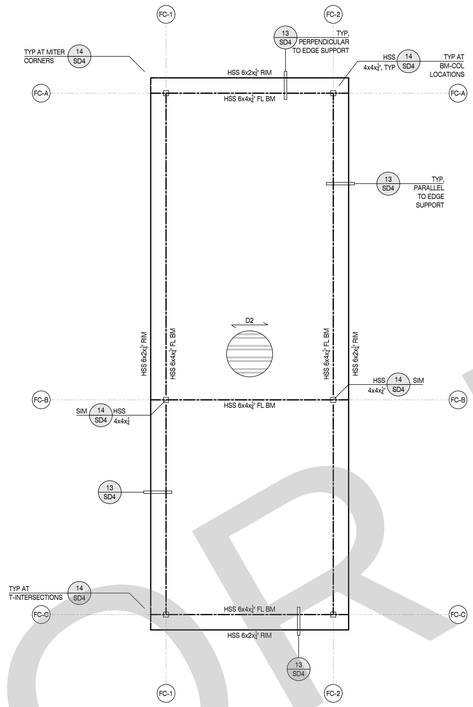

FUEL CANOPY (FC) - ROOF FRAMING PLAN

SCALE : 1/4" = 1'-0"

DO NOT SCALE PLANS FOR CONSTRUCTION DIMENSIONS. ALL CONSTRUCTION DIMENSIONS SHOULD BE VERIFIED WITH THE ARCHITECTURAL SET OF PLANS

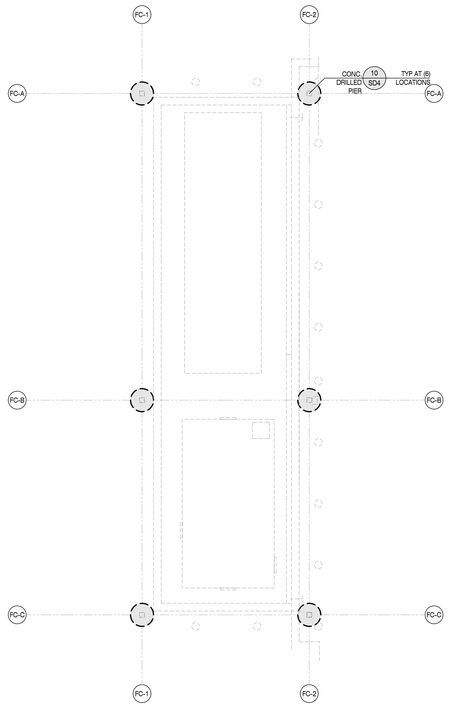

FUEL CANOPY (FC) - FOUNDATION PLAN

SCALE : 1/4" = 1'-0"

DO NOT SCALE PLANS FOR CONSTRUCTION DIMENSIONS. ALL CONSTRUCTION DIMENSIONS SHOULD BE VERIFIED WITH THE ARCHITECTURAL SET OF PLANS

FRAMING NOTES

1. REFER TO STRUCTURAL GENERAL NOTE SHEET (SN SERIES) AND DETAILS (SD SERIES) FOR INFORMATION NOT SHOWN ON THE MAIN FRAMING PLANS.
2. FRAMER TO COORDINATE JOIST SPACING WITH M.E.P. DESIGNS. FRAMER TO REVIEW MECH. AND ELECTRIC PLANS BEFORE FINAL PLACEMENT OF JOISTS. WHERE ALIGNED JOIST INTERFERES w/ FUTURE INSTALLATION OF M.E.P. INSTALLATION, CONTACT STRUCTURAL ENGINEER.
3. SPLICE ALL EXTERIOR WALL AND INTERIOR SHEAR WALL TOP PLATE BREAKS PER DETAIL 4/SD2, TYP.
4. ROOF SHOULD BE FULLY LOADED PRIOR TO NAILING THE TOP PLATE HARDWARE TO ROOF JOIST BOTTOM CHORD.
5. WATERPROOFING & DRAINAGE SHALL BE PROVIDED BY OTHERS.

FRAMING LEGEND & SYMBOLS

AT XX" O.C. REQUIRED ANCHOR/SPACING; X DETAIL #; XX SHEET #	INDICATES DETAIL CUT LOCATION. REFER TO DETAIL # AND STRUCTURAL SHEET NUMBER FOR MORE INFORMATION. TEXT ABOVE BUBBLE INDICATES REVISED HARDWARE OTHER THAN NOTED IN DETAIL
	INDICATES 2x6 STUD WALL PER PLAN & DETAIL 5/SD2. COORDINATE STUD WALL SIZE WITH ARCH. PLANS.
	INDICATES: 8" CMU (f'm = 1500 psi) WALL WITH #4 AT 16" O.C. VERTICAL & #4 AT 24" O.C. HORIZONTAL WITH SOLID GROUT. REFER TO PLANS & DETAILS FOR ADDL INFORMATION .
XX	INDICATES: 1. WALL OPENING HEADER PER FRAMING SCHEDULE BELOW 2. PROVIDE (1)2x TRIMMER EACH SIDE U.N.O. ON PLAN 3. PROVIDE KING STUDS EACH SIDE PER DETAIL 5/SD2 U.N.O. ON PLAN.
AR	INDICATES ALIGNED ROOF RAFTER W/ ROOF DIAPHRAGM EDGE NAILING
	INDICATES SPAN AND DIRECTION OF ROOF RAFTERS. RAFTER SIZE AND SPACING PER PLANS.
XX	INDICATES: 1. BEAM AS NOTED ON PLANS
D1; INDICATES METAL DECK SPAN & TYPE; INDICATES METAL DECK DIAPHRAGM	INDICATES METAL ROOF DECK PER PLAN. REFER TO DETAIL 12/SD4 FOR ADDITIONAL INFORMATION INCLUDING DECK TYPES.
END POST W/ HOLDOWN; TYPE; WALL CALC ID; LENGTH	INDICATES: 1. WOOD SHEAR WALL PANEL LOCATION PER PLAN INSTALLED FULL HEIGHT OF WALL 2. REFER TO DETAIL 1/SD2 SHEAR WALL SCHEDULE FOR ADDITIONAL REQUIREMENTS 3. PROVIDE POST AND STRAP/HOLDOWN EACH END OF WALL MIN AS INDICATED PER PLAN 4. AT UPPER FLOORS WHERE WALL SHEATHING DOES NOT EXTEND AND EDGE NAIL TO FLOOR RIM PROVIDE SILL PLATE NAILING OR SCREWS PER DETAIL 1/SD2
INDICATES SHEAR TYPE ABV & BLW OPENING; END POST W/ HOLDOWN; TYPE; LENGTH; WALL CALC ID; XXXX; INDICATES HORIZ. STRAP ABV & BLW OPENING	INDICATES: 1. WOOD SHEAR WALL PANEL LOCATION PER PLAN INSTALLED FULL HEIGHT OF WALL AND SHEAR PANEL ABOVE AND BELOW OPENING 2. REFER TO DETAIL 1/SD2 SHEAR WALL SCHEDULE FOR ADDITIONAL REQUIREMENTS 3. PROVIDE POST AND STRAP/HOLDOWN EACH END OF WALL MIN AS INDICATED PER PLAN 4. AT UPPER FLOORS WHERE WALL SHEATHING DOES NOT EXTEND AND EDGE NAIL TO FLOOR RIM PROVIDE SILL PLATE NAILING OR SCREWS PER DETAIL 1/SD2 5. REFER TO DETAIL 5B/SD2 FOR PERFORATED SHEAR WALL CONDITION (SHEAR ABV AND BLW OPENING W/O STRAP) 6. REFER TO DETAIL 5C/SD2 FOR FORCE TRANSFER SHEAR WALL CONDITION (SHEAR ABV AND BLW OPENING W/ STRAP)
	INDICATES: DRAG TIE STRAP PER PLAN OR DETAIL SHOWN ON PLANS.

GEOTECHNICAL INFORMATION

1. REFER TO STRUCTURAL COVER SHEET (SCS) FOR ASSUMED SOIL VALUES OR VALUES BASED ON THE PROVIDED GEOTECHNICAL (SOILS) REPORT:
2. THE OWNER/DEVELOPER AND SUBCONTRACTORS ARE TO REVIEW THE SOILS REPORT PRIOR TO COMMENCING CONSTRUCTION AND VERIFY THE PLANS COMPLY WITH THE CURRENT SOILS REPORT RECOMMENDATIONS. THE STRUCTURAL ENGINEER SHALL BE NOTIFIED IF THE SOILS REPORT DATE SHOWN ON SHEET (SCS) DOES NOT MATCH THE CURRENT REPORT DATE. THE OWNER/DEVELOPER IS RESPONSIBLE FOR UPDATING THE STRUCTURAL ENGINEER WITH CURRENT GEOTECHNICAL ENGINEERING REQUIREMENTS.

FOUNDATION NOTES

1. INSTALL HOLDOWN ANCHOR BOLTS PER 9/SD1. PROVIDE AND INSTALL ALL U.S.P. OR SIMPSON LUMBER CONNECTORS (OR EQUAL) FOUNDATION HARDWARE PER MANUFACTURERS RECOMMENDATIONS. DEEPEN FOOTING WHERE NECESSARY TO PROVIDE ANCHOR EMBEDMENT AT HOLDOWN LOCATIONS.
2. REFER TO SHEARWALL SCHEDULE 8/SD1 FOR ANCHOR BOLT SPACING AND FOR ANCHOR BOLT INSTALLATION.
3. REFER TO DETAIL PACKAGE FOR TYPICAL CONDITIONS NOT SPECIFICALLY CALLED OUT OR NOTED ON PLANS.
4. ALL DIMENSIONS SHALL BE PER THE CURRENT APPROVED STAMPED SET OF ARCHITECTURAL PLANS. OUR OFFICE SHOULD BE NOTIFIED IMMEDIATELY IF DISCREPANCIES EXIST BETWEEN THE ARCHITECTURAL & STRUCTURAL PLANS.
5. CONSTRUCT CONTINUOUS FOOTINGS AT CORNERS AND INTERSECTIONS PER DETAIL 11/SD1.
6. CENTER CONTINUOUS FOOTINGS UNDER WALLS U.N.O. CENTER DRILLED PIER FOOTINGS UNDER COLUMNS U.N.O.
7. FOUNDATION SIZES, DEPTHS, AND REINFORCEMENT SHOULD BE COORDINATED WITH THE OWNER/DEVELOPER'S SOILS ENGINEERS REPORT. SOILS ENGINEER REPORT MAY REQUIRE ADDITIONAL ITEMS NOT NOTED ON THE STRUCTURAL PLANS.
8. CLIENT/OWNER SHALL ADDRESS CORROSIVE SOIL CONDITIONS. FOR HIGH SULFATE SOIL CONDITIONS, MITIGATE PER ACI TABLE 19.3.2.1. THE CLIENT/OWNER SHALL HAVE A CORROSION ENGINEER PROVIDE MITIGATION RECOMMENDATIONS FOR ALL OTHER CORROSIVE SOIL CONDITIONS. CLIENT IS RESPONSIBLE TO REVIEW STRUCTURAL PLANS AND DETAILS FOR COMPLIANCE TO CORROSION ENGINEER'S RECOMMENDATIONS PRIOR TO CONSTRUCTION.
9. IN NO CASE SHALL PIPES, CONDUITS, OR SLEEVES BE EMBEDDED IN SPREAD FOOTINGS UNLESS SPECIFICALLY DETAILED ON THE STRUCTURAL DRAWINGS.

FOUNDATION LEGEND & SYMBOLS

	CONCRETE SLAB & FOOTING. FOOTING SIZE AND REINFORCING PER DETAIL SHEET SD1, U.N.O. PER PLAN.
	INDICATES: CONCRETE, CMU WALL FOOTING. FOOTING SIZE AND REINFORCING PER DETAIL SHEET SD4, U.N.O. PER PLAN.
	INDICATES: CONCRETE, DRILLED PIER FOOTING. FOOTING SIZE AND REINFORCING PER DETAIL SHEET SD4, U.N.O. PER PLAN.
AT XX" O.C. ANCHOR /SPACING; X DETAIL #; XX SHEET #	INDICATES: DETAIL CUT LOCATION. REFER TO DETAIL # AND STRUCTURAL SHEET NUMBER FOR MORE INFORMATION. TEXT ABOVE BUBBLE INDICATES REVISED HARDWARE OTHER THAN NOTED IN DETAIL
END POST W/ HOLDOWN; TYPE; WALL CALC ID; LENGTH; END POST W/ HOLDOWN; TYPE; LENGTH; WALL CALC ID; XXXX	INDICATES: WOOD SHEAR WALL LOCATION. REFER TO DETAIL 8/SD1 FOR ANCHOR BOLT SIZE & SPACING AT EACH SHEAR WALL TYPE. PROVIDE 3" SQ x 0.229" ANGLE SLOTTED PLATE WASHERS AT EACH ANCHOR BOLT. REDUCE BOLT SPACING BY HALF AT DOUBLE SIDED SHEAR WALLS.

STRUCTURAL OBSERVATION REQUIREMENTS

STRUCTURAL OBSERVATION IS REQUIRED BY THE ENGINEER OF RECORD. OUR OFFICE SHOULD BE NOTIFIED TO PERFORM STRUCTURAL OBSERVATION AT THE FOLLOWING STAGES OF CONSTRUCTION:

1. PRIOR TO POUR OF CONCRETE TO OBSERVE REINFORCING & EMBEDS
2. WOOD FRAMING OBSERVATION PRIOR TO COVERING w/ FINISH & AFTER ROOF LOAD

STK
SLT | TRUST | SIMPLE | FIT
42095 ZEVO DR., TEMECULA, CALIFORNIA 92590-3780
Phone: 951.296.9110 Fax: 951.296.6079 Email: stk@stkinc.com

CONSULTANT:

INNOVATIVE
STRUCTURAL ENGINEERING
27368 VIA INDUSTRIA
TEMECULA, CA 92590
WWW.ISEENGINEERS.COM
SOCAL | NORCAL | COLORADO
ISE PROJECT NO.: 22-7067

PROJECT MANAGER:
SANDY FONG EXT. 1016
SANDY@ISEENGINEERS.COM

PROJECT ADMINISTERED BY:

SAN BERNARDINO COUNTY
REAL ESTATE SERVICES
DEPARTMENT -
PROJECT MANAGEMENT
DIVISION

385 N. ARROWHEAD AVE.
SAN BERNARDINO, CA 92415

PROJECT NAME:

SAN BERNARDINO
COUNTY FIRE
DEPARTMENT:

FIRE STATION 226

PROJECT # 10.10.1032

CIP # _____

CAFM # _____

1920 DEL ROSA AVE N.
SAN BERNARDINO,
CA 92404

ISSUE INFORMATION:

DATE:	INFORMATION:
10-03-2022	PLAN CHECK

SHEET INFORMATION:

STK PROJECT NO.:	374-154-21
SCALE:	AS NOTED
DATE:	SEPTEMBER 2022
PLOT DATE:	09-28-2022
DRAWING NAME:	

SEAL:

REGISTERED PROFESSIONAL ENGINEER
SANDY FONG
C85965
CIVIL
STATE OF CALIFORNIA

SHEET TITLE:

SITE STRUCTURES, FUEL GENERATOR/TANK CANOPY - ROOF FRAMING & FOUNDATION PLANS

SHEET NO.:

S5

NOT FOR BID

Dwg:www-dwg-site - 1-Plan(Engine-C) 20/JOLVA
Pk45 21:2022/09/09

TYPICAL SLAB JOINT DETAIL (13)

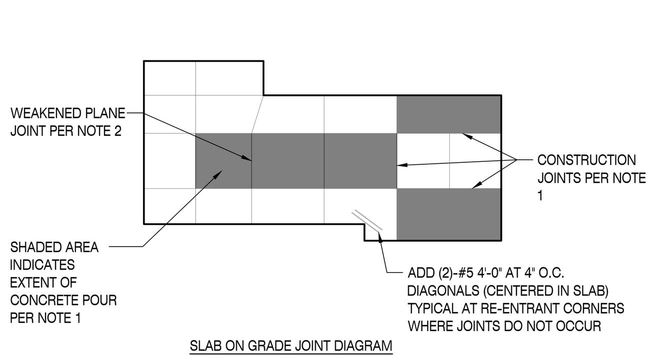

NOTES:
1. AREA OF CONCRETE POURS TO BE DETERMINED BY CONTRACTOR. SUBMIT JOINT LAYOUT PRIOR TO POURING SLABS PER GENERAL NOTES. PROVIDE CONSTRUCTION JOIINTS SURROUNDING AREA OF EACH POUR UNLESS DETAILED OTHERWISE. ALLOW 24 HOURS MINIMUM BEFORE CASTING SLABS IN OTHER AREAS.
2. SAWCUT WEAKENED PLANE JOINTS AS SOON AS CONCRETE CAN SUPPORT WEIGHT OF PERSONNEL AND SAW WITHOUT AFFECTING FINAL FINISH BUT NO LATER THAN 12 HOURS AFTER POUR. LOCATE WEAKENED PLAN JOINTS NO GREATER THAN 24 TO 36 TIMES SLAB THICKNESS "t" (15'-0" MAXIMUM) IN BOTH DIRECTIONS, U.N.O..

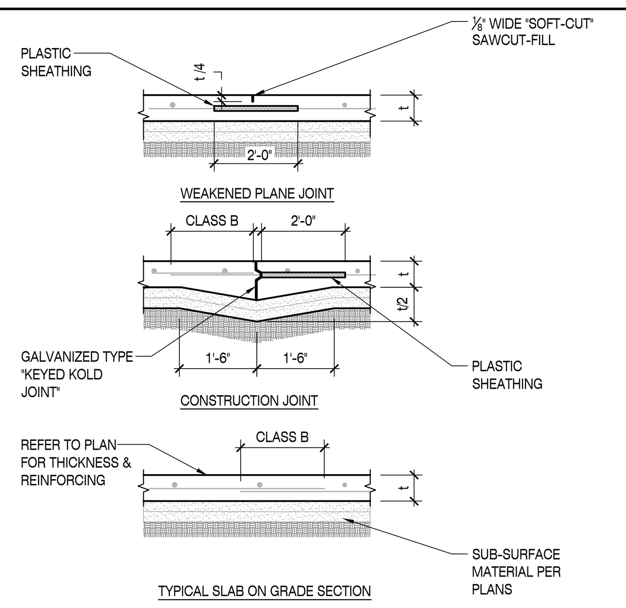

SCALE: N.T.S.

TYPICAL CONCRETE REINFORCING BAR DETAILS (10)

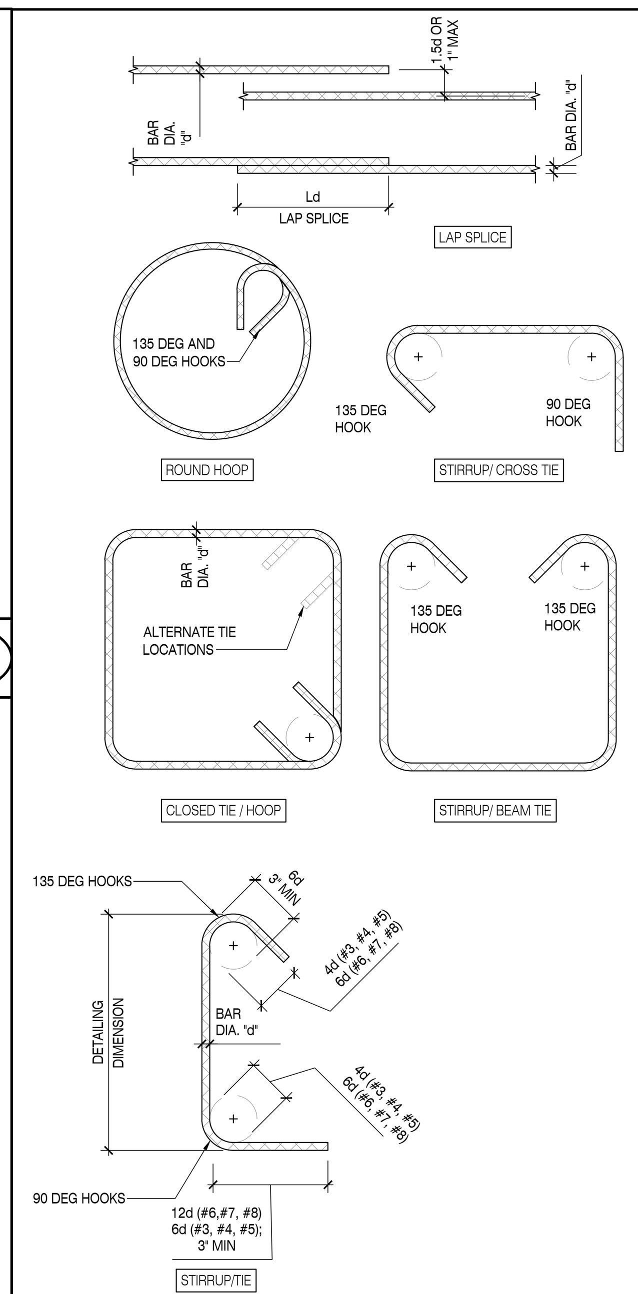

F'c = 2,500 PSI		TENSION DEVELOPMENT (Ld) AND LAP SPLICE (L) LENGTH FOR BARS IN WALLS, SLABS, AND FOOTINGS							
BAR SIZE	LAP CLASS	COVER = 0.75"		COVER = 1.5"		COVER = 2"		COVER = 3"	
		UNCOATED		UNCOATED		UNCOATED		UNCOATED	
		TOP	OTHER	TOP	OTHER	TOP	OTHER	TOP	OTHER
#3	A	15"	12"	15"	15"	15"	15"	15"	15"
	B	19"	15"	19"	19"	19"	19"	19"	19"
#4	A	24"	18"	19"	19"	19"	19"	19"	19"
	B	31"	24"	25"	25"	25"	25"	25"	25"
#5	A	35"	27"	24"	24"	24"	24"	24"	24"
	B	45"	35"	31"	31"	31"	31"	31"	31"
#6	A	47"	36"	29"	29"	29"	29"	29"	29"
	B	61"	47"	37"	37"	37"	37"	37"	37"
#7	A	76"	59"	47"	36"	41"	32"	41"	32"
	B	99"	76"	61"	47"	54"	41"	54"	41"
#8	A	94"	72"	59"	45"	47"	36"	47"	36"
	B	122"	94"	77"	59"	48"	47"	61"	47"
#9	A	113"	87"	72"	56"	58"	45"	53"	41"
	B	147"	113"	94"	72"	76"	58"	69"	53"

NOTES:
1. TABULATED VALUES ARE BASED ON A MINIMUM YIELD STRENGTH OF 60,000 PSI FOR ALL REINFORCING AND NORMAL WEIGHT CONCRETE.
2. SPACING OF REINFORCING BEING SPLICED SHALL BE GREATER THAN ONE BAR DIAMETER PLUS TWICE THE CONCRETE COVER.
3. "TOP" INDICATES A TOP BAR WHICH ARE DEFINED AS HORIZONTAL REINFORCING WITH MORE THAN 12" OF CONCRETE CAST BELOW THE BAR.
4. LENGTHS ARE FOR UNCOATED BARS ONLY.
5. FOR LIGHTWEIGHT CONCRETE, DIVIDE THE CORRESPONDING TABULATED VALUE BY 0.75.

STANDARD HOOK DEVELOPMENT LENGTH (Ldh)	
BAR SIZE	f'c= 2,500 psi
#3	9"
#4	12"
#5	15"
#6	18"
#7	21"
#8	24"
#9	27"

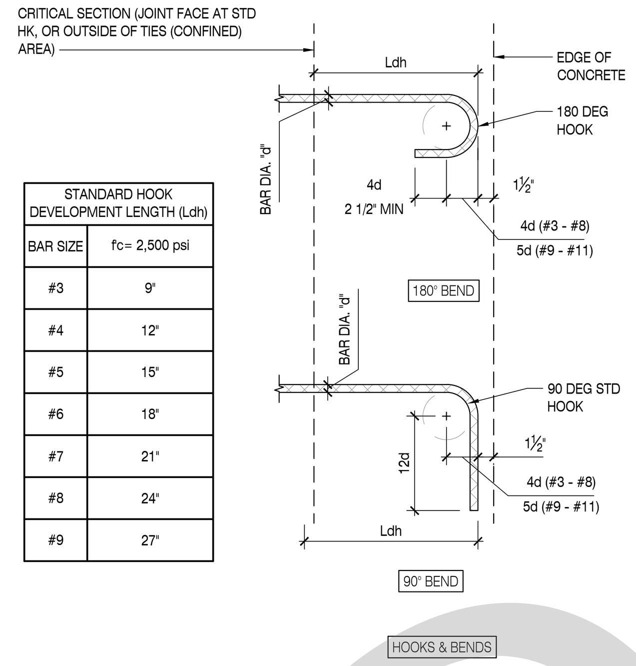

SCALE: N.T.S.

TYPICAL SILL PLATE ANCHOR BOLT SPECIFICATIONS (8)

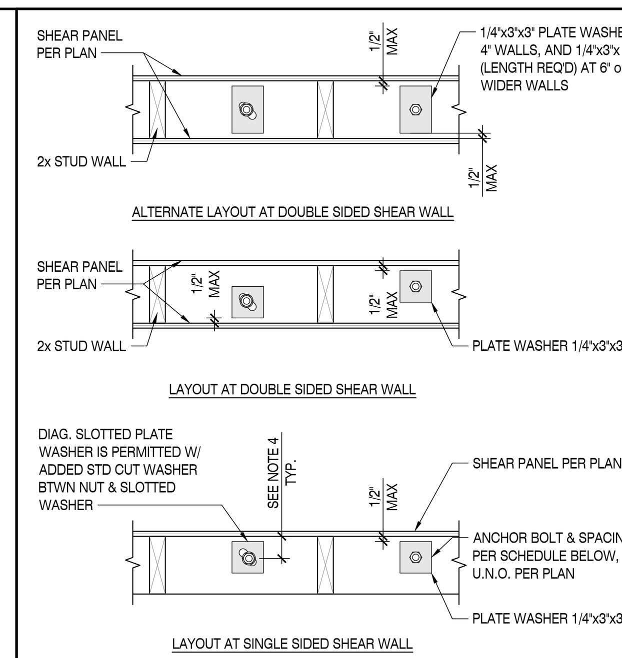

SHEAR WALL TYPE	FOUNDATION ATTACHMENT HARDWARE ALTERNATES MAXIMUM SPACING (INCHES ON CENTER)			
	SINGLE-SIDED SHEAR WALL		DOUBLE-SIDED SHEAR WALL	
	5/8" Ø A.B.	5/8"Øx8" TITEN HD (ICC-ESR-2713)	5/8" Ø A.B.	5/8"Øx8" TITEN HD (ICC-ESR-2713)
NON-SHEAR	72"	72"	72"	72"
6	48"	40"	24"	20"
4	32"	27"	16"	12"
3	24"	21"	12"	10"
2	18"	16"	9"	8"
2A	16"	14"	8"	7"
2B	14"	12"	7"	6"

NOTES:
1. EMBEDMENT: ANCHOR BOLTS EMBEDMENT SHALL BE 7" EMBEDMENT INTO CONCRETE. EMBEDMENT SHALL BE FROM TOP OF SLAB AT MONOPOUR. EMBEDMENT SHALL BE AT BE FROM COLD-JOINT AT DUAL POUR CONDITIONS. AT CURB/WALL CONDITION, EMBEDMENT SHALL BE FROM TOP OF CURB/WALL.
2. BOLT NUT & WASHER: ANCHOR BOLTS SHALL BE EITHER: L-BOLTS OR HEADED BOLTS. PROVIDE PROPER NUT & STANDARD (ANSI) 1 ¼" Ø x 0.100" THICK CUT WASHERS AT ALL BEARING, AND NON-SHEAR WALL ANCHOR BOLT LOCATIONS. PROVIDE STANDARD (ANSI) 1 ¼" Ø x 0.100" THICK CUT WASHERS AND 3" x 3" x 0.229" THICK ANGLE SLOTTED PLATE WASHER AT ALL SHEAR WALL ANCHOR BOLT LOCATIONS.
3. MINIMUM ANCHORS: MINIMUM (2) ANCHOR BOLTS PER PIECE OF SILL PLATE. ANCHOR BOLTS SHALL BE LOCATED WITHIN 7" MIN OR 12" MAX FROM THE END OF ANY SILL PLATE BREAK.
4. EDGE & END DISTANCE: ANCHOR BOLTS SHALL MAINTAIN A MINIMUM 1-¾" EDGE OF CONCRETE DISTANCE & 1" EDGE OF SILL PLATE DISTANCE. SQUARE WASHER SHALL BE MAXIMUM ½" DISTANCE FROM EDGE OF SILL PLATE ON SHEAR SIDE.

SCALE: N.T.S.

PAD FOOTING (5)

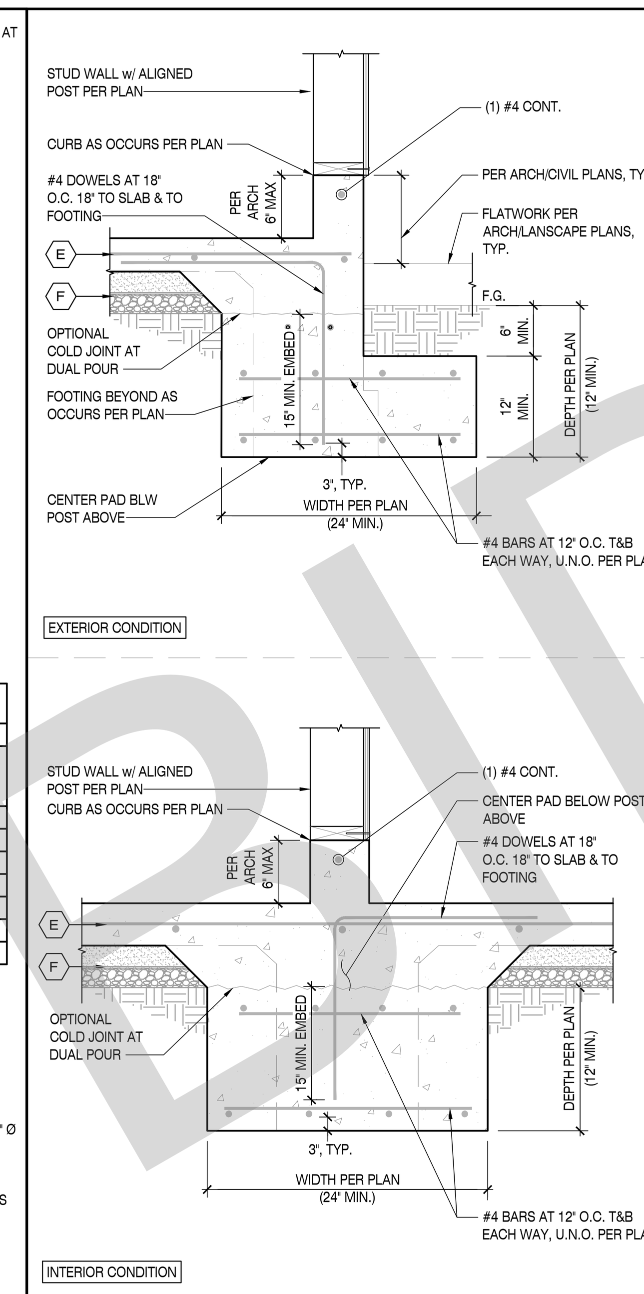

SCALE: N.T.S.

SLAB & FOOTING SPECIFICATIONS (1)

**SLAB & FOOTING SPECIFICATIONS FOR "LOW" EXPANSIVE SOILS	
*LOW - PER GEOTECHNICAL ENGINEER	
LABEL	1 STORY FOUND.
A	15", U.N.O. PER PLAN
B	12" BELOW LOWEST ADJACENT GRADE
C	4" (2X4 WALL PER PLAN) 6" (2x6 WALL PER PLAN) 8" (2x8 WALL PER PLAN)
D	(2) #5 BAR TOP & BOTTOM, U.N.O. PER PLAN
E	PER PLAN
F	2" THICK CLEAN SAND OVER 10 MIL VAPOR BARRIER OVER 2" THICK, CLEAN SAND BASE

* EXPANSION CATEGORY CLASSIFICATION IS PER CBC 1802.3

** THE CONVENTIONAL FOUNDATION INFORMATION ABOVE IS FOR THIS SPECIFIC PROJECT ONLY WITH A "LOW" EXPANSION INDEX

SCALE: N.T.S.

WIDENED FOOTING AT EXTERIOR WALL (16)

REFER TO DETAILS 1&2/SD1 FOR INFORMATION NOT PROVIDED

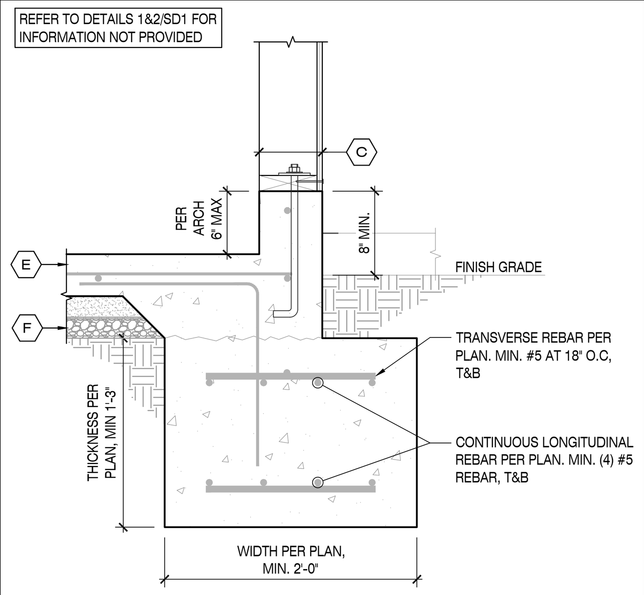

SCALE: N.T.S.

EXTERIOR BEARING OR SHEAR WALL FOOTING W/ CURB (2)

REFER TO DETAIL 1/SD1 FOR INFORMATION NOT PROVIDED

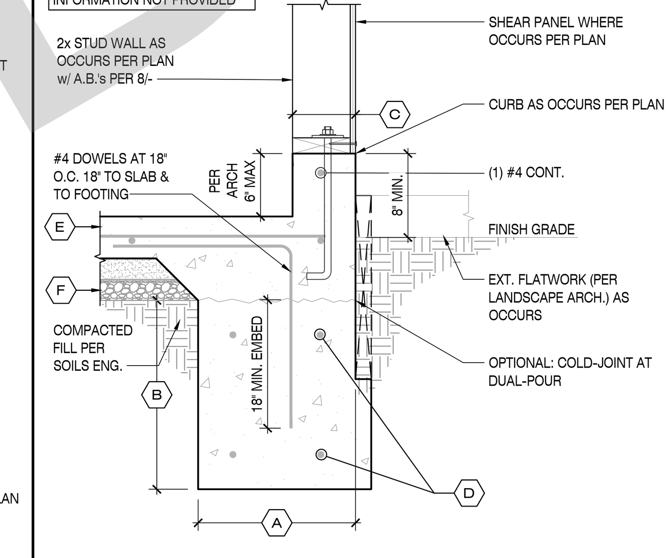

SCALE: N.T.S.

NOT USED (14)

SCALE: N.T.S.

INTERIOR TIE BEAM FOOTING (17)

REFER TO DETAIL 1/SD1 FOR INFORMATION NOT PROVIDED

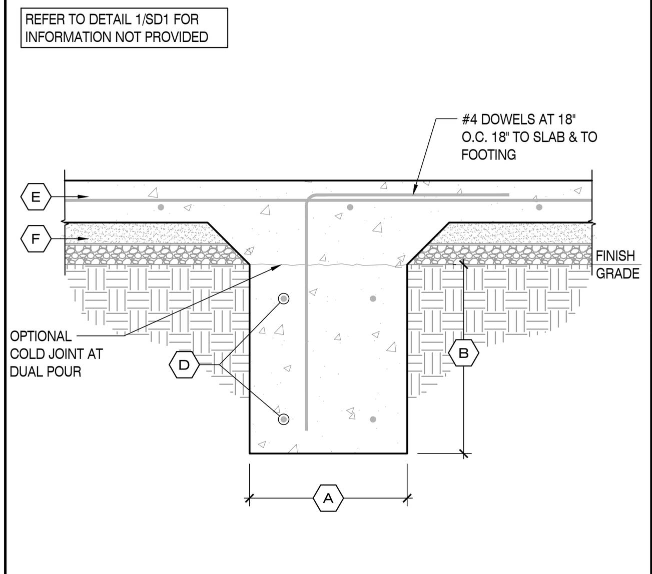

SCALE: N.T.S.

TYPICAL REINFORCING @ FOOTING INTERSECTIONS (11)

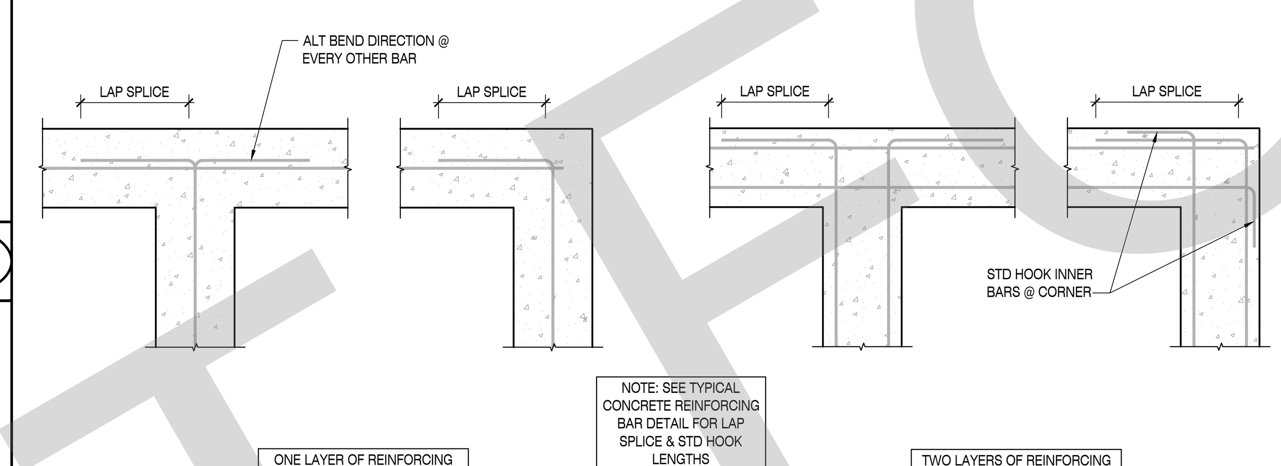

SCALE: N.T.S.

SSTB & SB HOLDOWN ROD AT INTERIOR AND EXTERIOR FOOTINGS (9)

HOLDOWN ANCHOR BOLT SCHEDULE		
HD	A.B.	Le (IN)
HTT4	SSTB20	16-5/8
HTT5	SSTB20	16-5/8
HDU5	SSTB24	20-5/8
HDU8	SSTB28	24-7/8
HDU11	SB1x30	24
HDU14	SB1x30	24

REFER TO MFR CATALOG FOR NUMBER & SIZE OF FASTENERS FROM POST TO HOLDOWN FOR MAXIMUM CAPACITY ONLY

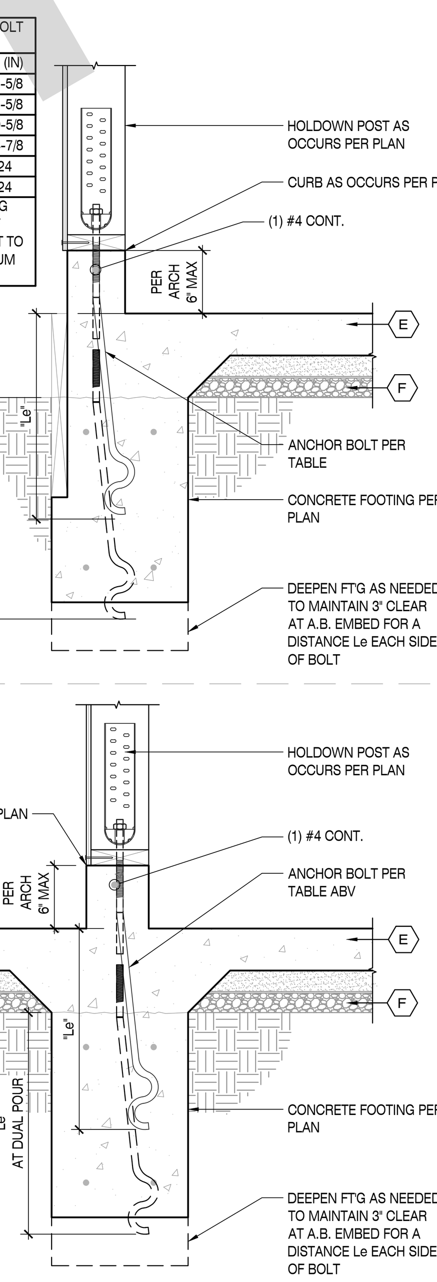

SCALE: N.T.S.

EXTERIOR TIE BEAM FOOTING (6)

REFER TO DETAIL 1/SD1 FOR INFORMATION NOT PROVIDED

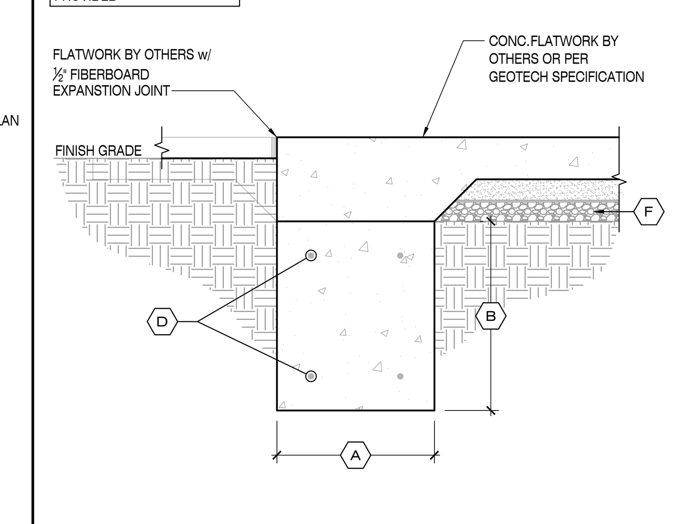

SCALE: N.T.S.

INTERIOR BEARING OR SHEAR WALL FOOTING (3)

REFER TO DETAIL 1/SD1 FOR INFORMATION NOT PROVIDED

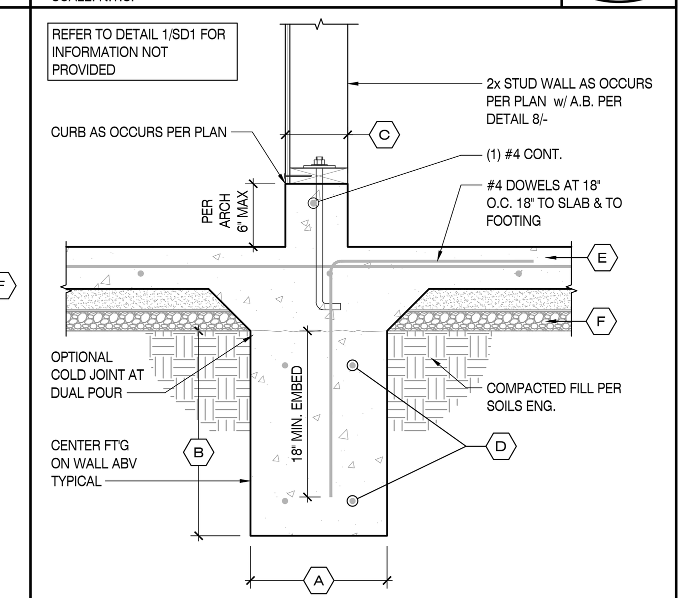

SCALE: N.T.S.

SLAB DEPRESSION (18)

REFER TO DETAIL 1/SD1 FOR INFORMATION NOT PROVIDED

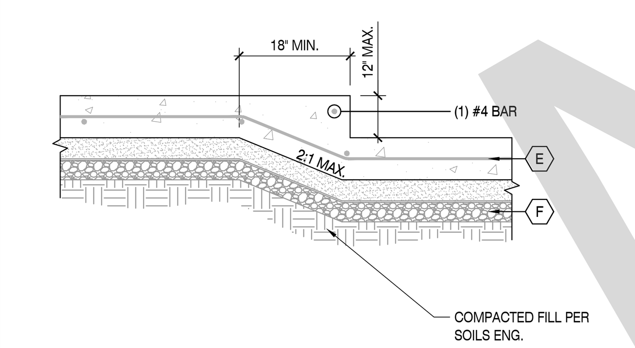

SCALE: N.T.S.

NOT USED (15)

SCALE: N.T.S.

FOOTING TRENCH & PIPES THRU FOOTING (12)

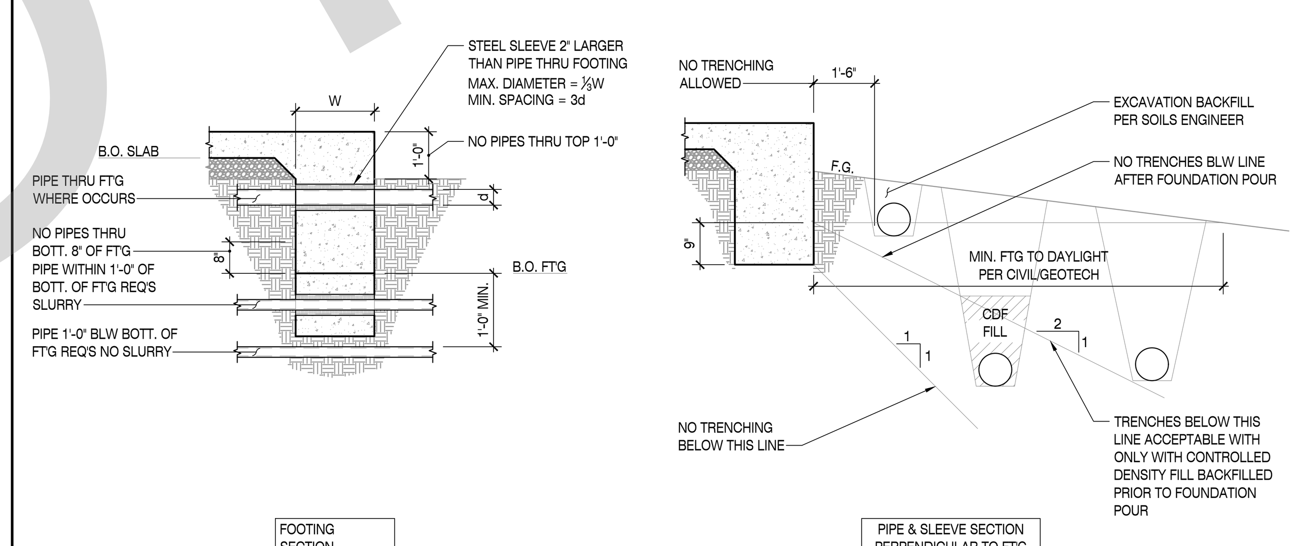

SCALE: N.T.S.

INTERIOR PARTITION WALL CONNECTION (7)

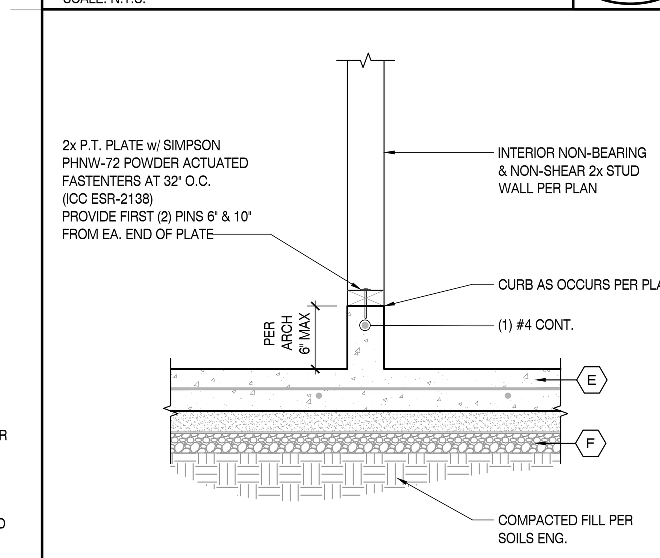

SCALE: N.T.S.

EXTERIOR FOOTING AT OPENING (4)

REFER TO DETAIL 1/SD1 FOR INFORMATION NOT PROVIDED

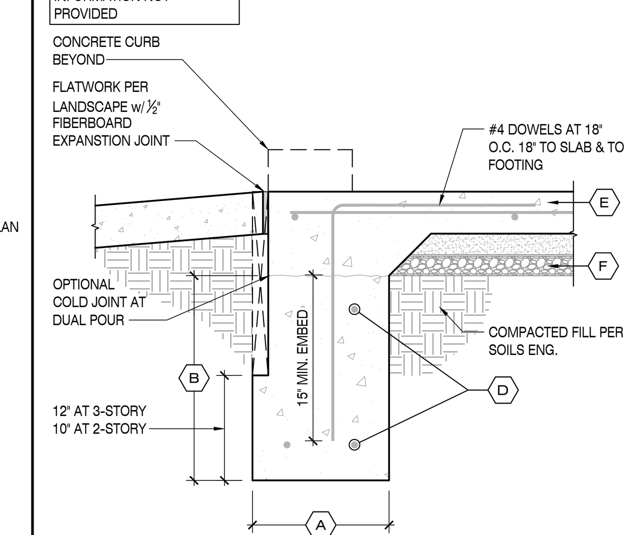

SCALE: N.T.S.

EXTERIOR FOOTING AT 12" (MAX) FRAMING POP-OUT (19)

REFER TO DETAIL 1&2/SD1 FOR INFORMATION NOT PROVIDED

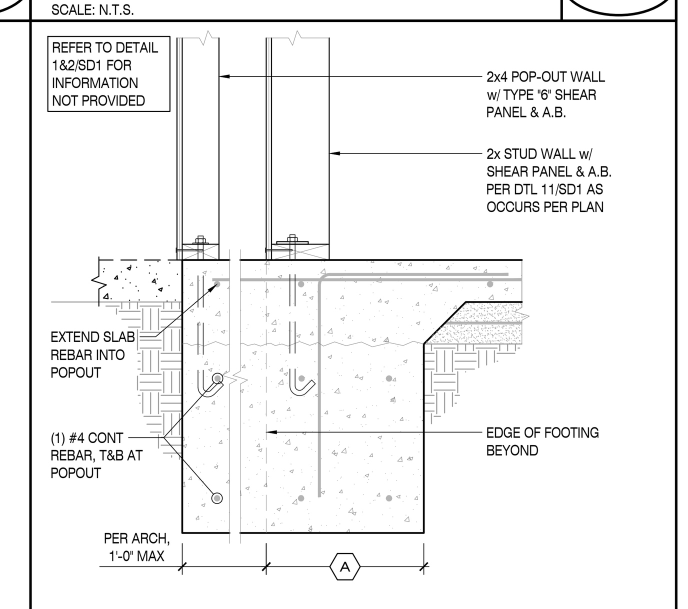

SCALE: N.T.S.

STK ARCHITECTURE, INC.
42095 ZEVO DR., TEMECULA, CALIFORNIA 92590-3780
Phone: 951.296.9110 Fax: 951.296.6079 Email: stk@stkinc.com

CONSULTANT:

INNOVATIVE STRUCTURAL ENGINEERING
27369 VIA INDUSTRIA
TEMECULA, CA 92590
TELE: 951.600.0032
WWW.ISEENGINEERS.COM
SOCAL | NORCAL | COLORADO
ISE PROJECT NO.: 22-7067

PROJECT MANAGER:
SANDY FONG EXT. 1016
SANDY@ISEENGINEERS.COM

PROJECT ADMINISTERED BY:
SAN BERNARDINO COUNTY REAL ESTATE SERVICES DEPARTMENT - PROJECT MANAGEMENT DIVISION

385 N. ARROWHEAD AVE.
SAN BERNARDINO, CA 92415

PROJECT NAME:
SAN BERNARDINO COUNTY FIRE DEPARTMENT:
FIRE STATION 226

PROJECT # 10.10.1032
CIP # ______
CAFM # ______

1920 DEL ROSA AVE N.
SAN BERNARDINO,
CA 92404

ISSUE INFORMATION:

DATE:	INFORMATION:
10-03-2022	PLAN CHECK

SHEET INFORMATION:
STK PROJECT NO.: 374-154-21
SCALE: AS NOTED
DATE: SEPTEMBER 2022
PLOT DATE: 09-28-2022
DRAWING NAME:

SEAL:
REGISTERED PROFESSIONAL ENGINEER SANDY FONG C83965 CIVIL STATE OF CALIFORNIA

SHEET TITLE:
FOUNDATION DETAILS

SHEET NO.:
SD1

09/28/2022 12:13PM W:\7067\02 - Drawings\Details.dwg

NOT FOR BID

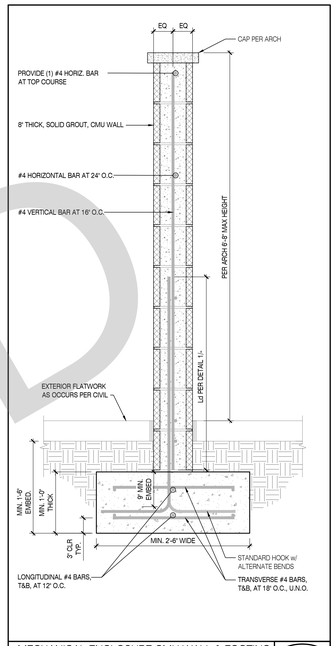

MECHANICAL ENCLOSURE CMU WALL & FOOTING

SCALE: N.T.S.

1

TABLE 1 - RETAINING WALL & FOOTING DIMENSIONS & REINFORCING

RET. WALL HGHT. H_{TRW}	RET.-SOIL HGHT. H_{SW}	UPPER RETAINING WALL				LOWER RETAINING WALL*				CONT. CONC. WALL FOOTING											
		WALL DEPTH D_{URW}	WALL HGHT. H_{URW}	WALL REBAR		WALL DEPTH D_{LRW}	WALL HGHT. H_{LRW}	WALL REBAR		FOOTING DIMENSIONS				FTG. REBAR		KEY DIMS.**		KEY REBAR**	
				VERT.	HORIZ.			VERT.	HORIZ.	FTG WIDTH F_W	FTG DEPTH F_D	FTG TOE F_T	FTG HEEL F_H	TRANS.	LONG.	KEY WIDTH F_{KW}	KEY DEPTH F_{KD}	TRANS.	LONG.
13'-0"	4'-6"	8"	13'-0"	#6 AT 16"	#4 AT 16"	-	-	-	-	3'-0"	1'-3"	1'-4"	2'-0"	#5 AT 16"	#5 AT 16"	-	-	-	-
13'-0"	7'-0"	8"	8'-4"	#5 AT 16"	#4 AT 16"	12"	4'-8"	#8 AT 16"	(2) #4 AT 16"	5'-0"	1'-3"	2'-3"	3'-3"	#5 AT 16"	#5 AT 16"	1'-0"	0'-9"	#5 AT 9"	#5 AT 9"

* NOTE: WHERE LOWER RETAINING WALL INFORMATION IS NOT PROVIDED, USE UPPER RETAINING WALL INFORMATION FOR THE ENTIRE WALL HEIGHT.

** NOTE: WHERE KEY INFORMATION IS NOT PROVIDED, A SHEAR KEY IS NOT REQUIRED AT THE CONT. WALL FOOTING.

RETAINING WALL DESIGN CRITERIA:
ACTIVE EARTH PRESSURE = 40 PSF/FT (E.F.P. PER SOILS REPORT)

SEISMIC EARTH PRESSURE = 30 PSF/FT (INV. TRIANGULAR DISTRIB.) PER SOIL REPORT ADDENDUM, LATERAL EARTH PRESSURE, ISSUED JUNE 28, 2022, BY INLAND FOUNDATION ENGINEERING, INC.

SEISMIC WALL WEIGHT:
Cs = 0.457, (SPECIAL REINFORCED MASONRY SHEAR WALL)
Vs = 38.4 PSF (8" THICK, SOLID GROUT WALL)
Ve = 60.8 PSF (12" THICK, SOLID GROUT WALL)

WIND PRESSURE:
Pw = 31.7 PSF (FREE-STANDING WALL, H = 6'-0")
Pw = 11.8 PSF (OTHER STRUCTURES, OPEN LATTICE, H=2'-0")

Pw = 23.1 PSF,
AVERAGE WIND PRESSURE ON CMU WALL AND ANTI-CLIMB FENCE

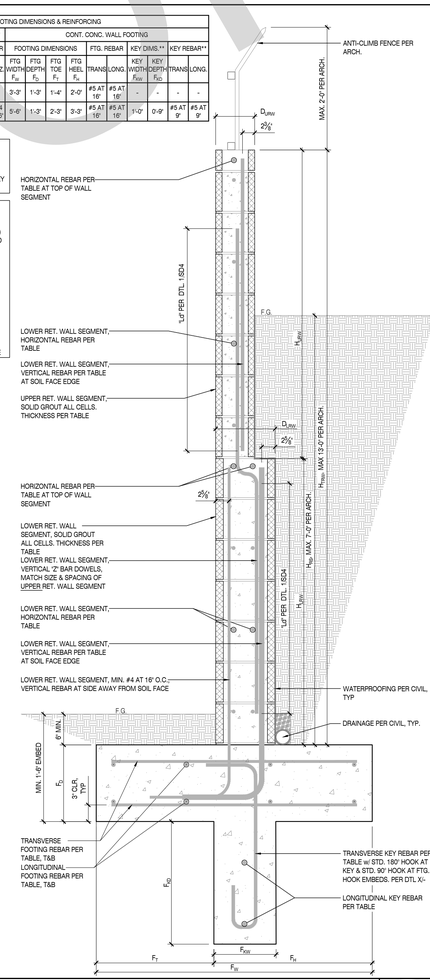

SITE RETAINING WALL PER DETAIL 1/A1.4, TYPICAL

SCALE: N.T.S.

3

TABLE 1 - RETAINING WALL & FOOTING DIMENSIONS & REINFORCING

RET. WALL HGHT. H_{TRW}	RET.-SOIL HGHT. H_{SW}	UPPER RETAINING WALL				LOWER RETAINING WALL*				CONT. CONC. WALL FOOTING											
		WALL DEPTH D_{URW}	WALL HGHT. H_{URW}	WALL REBAR		WALL DEPTH D_{LRW}	WALL HGHT. H_{LRW}	WALL REBAR		FOOTING DIMENSIONS				FTG. REBAR		KEY DIMS.**		KEY REBAR**	
				VERT.	HORIZ.			VERT.	HORIZ.	FTG WIDTH F_W	FTG DEPTH F_D	FTG TOE F_T	FTG HEEL F_H	TRANS.	LONG.	KEY WIDTH F_{KW}	KEY DEPTH F_{KD}	TRANS.	LONG.
13'-0"	4'-6"	8"	13'-0"	#6 AT 16"	#4 AT 16"	-	-	-	-	4'-0"	1'-3"	3'-4"	0'-8"	#5 AT 16"	#5 AT 16"	-	-	-	-
13'-0"	7'-0"	8"	8'-4"	#5 AT 16"	#4 AT 16"	12"	4'-8"	#8 AT 16"	(2) #4 AT 16"	6'-6"	1'-3"	5'-6"	1'-0"	#5 AT 16"	#5 AT 16"	1'-0"	2'-0"	#5 AT 9"	#5 AT 9"

* NOTE: WHERE LOWER RETAINING WALL INFORMATION IS NOT PROVIDED, USE UPPER RETAINING WALL INFORMATION FOR THE ENTIRE WALL HEIGHT.

** NOTE: WHERE KEY INFORMATION IS NOT PROVIDED, A SHEAR KEY IS NOT REQUIRED AT THE CONT. WALL FOOTING.

RETAINING WALL DESIGN CRITERIA:
ACTIVE EARTH PRESSURE = 40 PSF/FT (E.F.P. PER SOILS REPORT)

SEISMIC EARTH PRESSURE = 30 PSF/FT (INV. TRIANGULAR DISTRIB.) PER SOIL REPORT ADDENDUM, LATERAL EARTH PRESSURE, ISSUED JUNE 28, 2022, BY INLAND FOUNDATION ENGINEERING, INC.

SEISMIC WALL WEIGHT:
Cs = 0.457, (SPECIAL REINFORCED MASONRY SHEAR WALL)
Vs = 38.4 PSF (8" THICK, SOLID GROUT WALL)
Ve = 60.8 PSF (12" THICK, SOLID GROUT WALL)

WIND PRESSURE:
Pw = 31.7 PSF (FREE-STANDING WALL, H = 6'-0")
Pw = 11.8 PSF (OTHER STRUCTURES, OPEN LATTICE, H=2'-0")

Pw = 23.1 PSF,
AVERAGE WIND PRESSURE ON CMU WALL AND ANTI-CLIMB FENCE

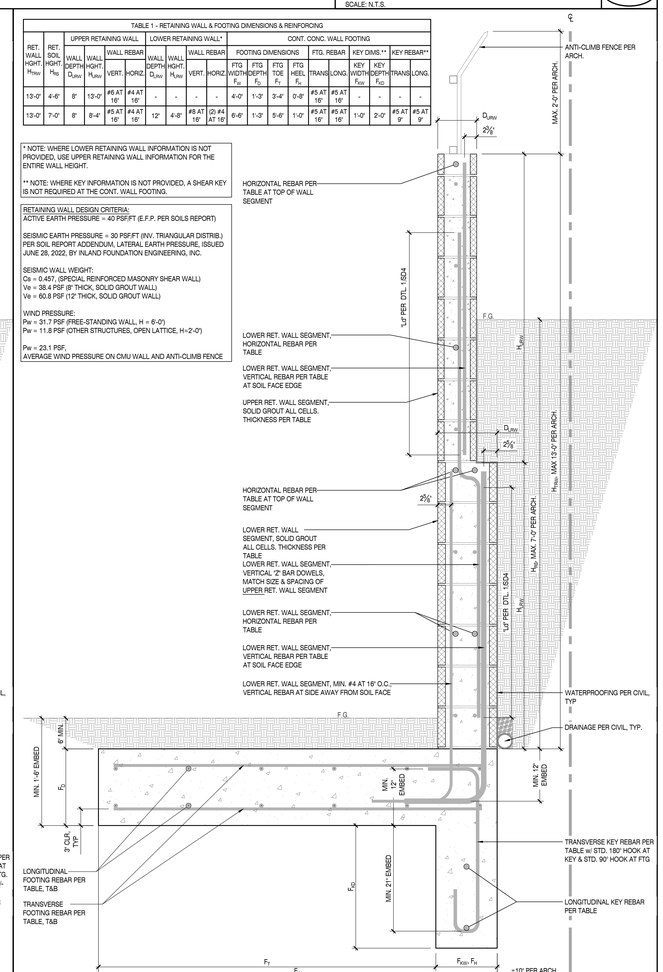

SITE RETAINING WALL PER DETAIL 1/A1.4, PROPERTY LINE CONDITION

SCALE: N.T.S.

2

NOT FOR BID

STK
STEEL TECHNOLOGY, INC.
42095 ZEVO DR., TEMECULA, CALIFORNIA 92590-3780
Phone: 951.296.9110 Fax: 951.296.6079 Email: stk@stkinc.com

CONSULTANT:

INNOVATIVE
STRUCTURAL ENGINEERING
27368 VIA INDUSTRIA
TEMECULA, CA 92590
TEL: 951.296.9500
WWW.ISEENGINEERS.COM
SOCAL | NORCAL | COLORADO
ISE PROJECT NO.: 22-7067

PROJECT MANAGER:
SANDY FONG EXT. 1016
SANDY@ISEENGINEERS.COM

PROJECT ADMINISTERED BY:

SAN BERNARDINO COUNTY
REAL ESTATE SERVICES
DEPARTMENT -
PROJECT MANAGEMENT
DIVISION

385 N. ARROWHEAD AVE.
SAN BERNARDINO, CA 92415

PROJECT NAME:

SAN BERNARDINO
COUNTY FIRE
DEPARTMENT:

FIRE STATION 226

PROJECT # 10.10.1032

CIP # _____

CAFM # _____

1920 DEL ROSA AVE N.
SAN BERNARDINO,
CA 92404

ISSUE INFORMATION:

DATE:	INFORMATION:
10-03-2022	PLAN CHECK

SHEET INFORMATION:

STK PROJECT NO.: 374-154-21
SCALE: AS NOTED
DATE: SEPTEMBER 2022
PLOT DATE: 09-28-2022
DRAWING NAME:

SEAL:

REGISTERED PROFESSIONAL ENGINEER
SANDY FONG
C85985
CIVIL
STATE OF CALIFORNIA

SHEET TITLE:

SITE & RETAINING
WALL DETAILS

SHEET NO.:

SD1.1

NOT FOR BID

13 BUILT-UP MEMBER DETAILS
SCALE: N.T.S.

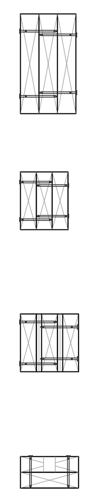

BEAM OR RIM MEMBER: PROVIDE (2) ROWS 16d COMMON NAILS AT 6" O.C. AT EACH PLY.

LAP RIM MEMBERS 4'-0"

LAP BEAM MEMBERS 8'-0" WITH CENTER OF BREAK ABOVE SUPPORTS, MUST BE CONTINUOUS BETWEEN BEARING POINTS

VERTICAL POST MEMBER: PROVIDE (2) ROWS 10d COMMON NAILS AT 6" O.C. AT EACH PLY.

AT SHEAR WALL END POST, EDGE NAIL WALL TO EACH PLY OF POST

HEADER AT DOOR/WDW: PROVIDE (2) ROWS 16d COMMON NAILS AT 6" O.C. PER PLY.

ADD ½" OSB SHIM BETWEEN EACH PLY & GLUE ALL SEAMS

DOUBLE SILL PLATE: PROVIDE (2) ROWS 10d COMMON NAILS AT 6" O.C.

SET LOWER PLATE ON STEM WALL & TIGHTEN ANCHOR BOLTS THEN PLACE UPPER PLATE & STICH NAIL

9 NOTCHED OR DRILLED SOLID JOISTS
SCALE: N.T.S.

JOIST SIZE	MAX. NOTCH WIDTH: D/3	MAX. NOTCH DEPTH: D/6	MAX HOLE SIZE: D/3
2x6	1¾"	⅞"	1¾"
2x8	2⅜"	1⅛"	2⅜"
2x10	3"	1½"	3"
2x12	3¾"	1⅞"	3¾"
2x14	4⅜"	2⅛"	4⅜"

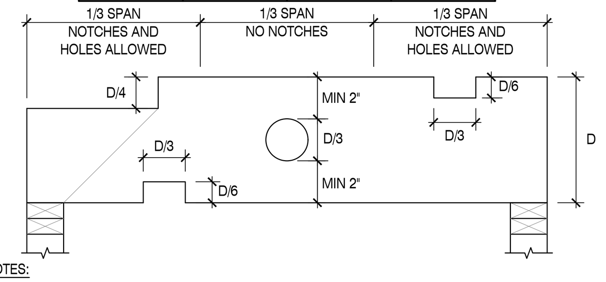

NOTES:

1. HOLES MAY BE DRILLED IN ANY 1/3 SPAN. HOLES MUST BE A MIN 12" FROM ANY NOTCH.
2. DO NOT NOTCH BOTH TOP AND BOTTOM SURFACES WITHIN THE SAME 1/3 SPAN.
3. MAX ALLOWED IS A COMBINATION OF TWO NOTCHES AND/OR HOLES PER 1/3 SPAN.
4. THIS DETAIL DOES NOT APPLY TO NOTCHES AND HOLES IN STRUCTURAL BEAMS, THEY MUST BE SPECIFICALLY DETAILED.
5. NOTCHES AND HOLES ARE NOT ALLOWED IN CANTILEVERED JOISTS.
6. REFERT TO MANUFACTURER'S RECOMMENDATIONS FOR HOLES IN MANUFACTURED I-JOISTS. DO NOT NOTCH I-JOISTS.

7 DRAG STRAP TO BEAM OR JOIST CONNECTION
SCALE: N.T.S.

DRAG STRAP SPECIFICATIONS

STRAP	DRAG MEMBER	SCAB LENGTH AND NAILING OF SCAB TO DRAG MEMBER	"L1" LENGTH OF STRAP TO TOP PLTs	"L2" LENGTH OF STRAP TO DRAG MEMBER	DRAG CAPACITY (LBS)
(1) CS16	1 ¾" RIM	N/A	16" WITH (15) 8d's	32" w/ (2) ROWS OF 8d's AT 4 ⅛" O.C.	1,705
(2) CS16	1 ¾" RIM w/ 2x SCAB	4' LONG w/ (2) ROWS OF 16d's AT 6" O.C.	16" WITH (15) 8d's	32" w/ (2) ROWS OF 8d's AT 4 ⅛" O.C.	3,410
CMST14	3 ½" MIN.	N/A	34" WITH (38) 10d's	72" w/ (2) ROWS OF 10d's AT 3 ½" O.C.	6,490
CMST12	3 ½" MIN.	N/A	44" WITH (49) 10d's	96" w/ (2) ROWS OF 10d's AT 3 ½" O.C.	9,215

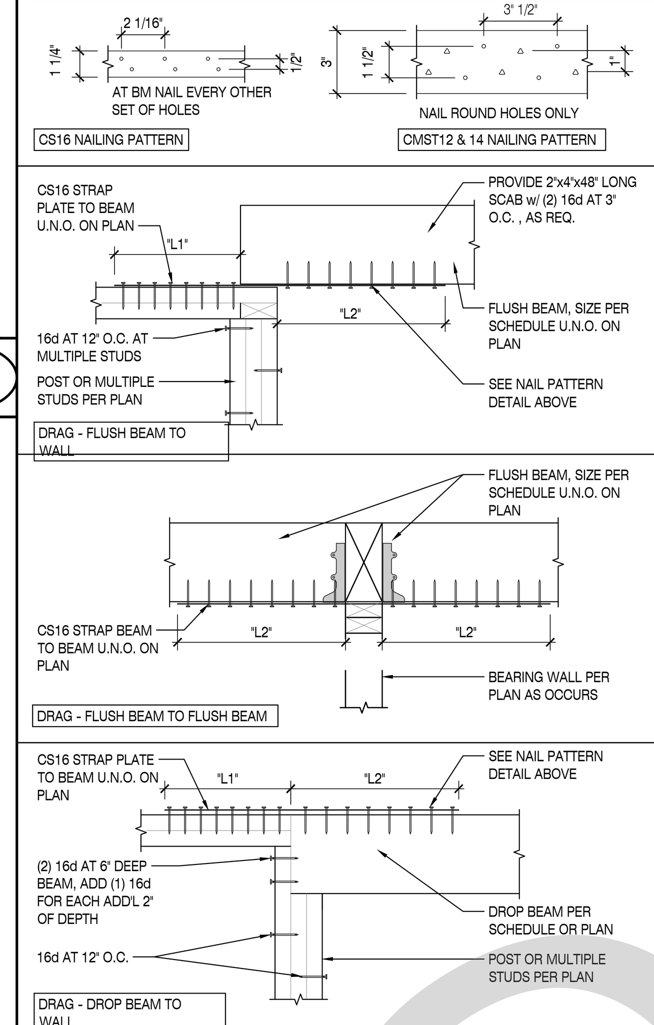

6 BEAM DRAG CONNECTIONS
SCALE: N.T.S.

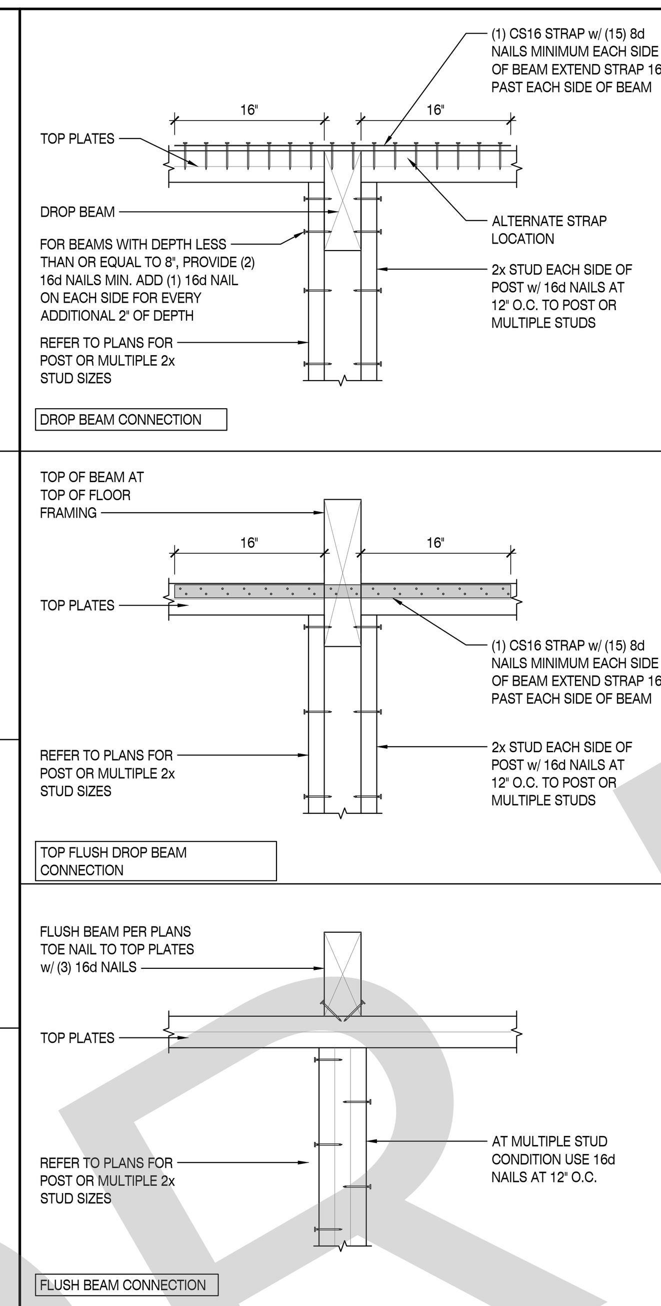

1 SHEAR WALL SCHEDULE
SCALE: N.T.S.

VERTICAL WOOD FRAMED SHEAR WALL SCHEDULE - 2019 CBC / AF&PA SDPWS-2015 - SEISMIC DESIGN CATEGORY D, E & F

MARK	WOOD STRUCTURAL PANEL			PANEL NAILING			SHEAR WALL SILL PLATE ATTACHMENT WHEN RIM DOES NOT NOT EXTEND AND EDGE NAIL FLOOR RIM	TO WOOD FRAMING		FRAMING MEMBER THICKNESS AT ADJOINING PANEL EDGES	ASD CAPACITY (PLF) (DOUGLAS FIR)	
	THICK (IN)	GRADE RATING	SPAN RATING	NAIL SIZE	EDGE NAIL ON CENTER SPACING	FIELD NAIL ON CENTER SPACING	NOMINAL PLATE THICKNESS	SDWS22600DB SCREW O.C. SPACING	MIN. RIM/BLK THK. (in)		SEISMIC	WIND
6	3/8	SHEATHING	24/0	8d	6"	12"	2x	12"	1.25	2x	260	365
4	3/8	SHEATHING	24/0	8d	4"	12"	2x	8"	1.25	2x	350	532
3	3/8	SHEATHING	24/0	8d	3"	12"	2x	7"	1.25	3x	490	685
2	3/8	SHEATHING	24/0	8d	2"	12"	2x	6"	1.25	3x	640	895
2A	3/8	STRUCTURAL I	24/0	8d	2"	12"	2x	3"	1.25	3x	730	1022
2B	15/32	STRUCTURAL I	32/16	10d	2"	12"	2x	3"	1.25	3x	870	1217

SHEAR WALL NOTES:

1. PANEL NAILS - MAY BE EITHER COMMON OR GALVANIZED BOX. GALVANIZED NAILS ARE REQUIRED WHEN PENETRATING PRESSURE TREATED LUMBER THAT CONTAINS TREATMENTS OTHER THAN BORATE.
2. PANEL RATING - WOOD PANELS MAY CONSIST OR EITHER OSB OR 5-PLY PLYWOOD WITH A MINIMUM EXPOSURE 1 RATING.
3. STUD SPACING - 2x WOOD STUDS AT SHEAR WALL SHALL BE SPACED A MAXIMUM 16" ON CENTER.
4. PANEL BREAKS - ALL PANELS EDGES SHALL BE 2x BLOCKED IF OCCURS.
5. STAGGERED NAILS - ALL NAILING AT 3" O.C. OR CLOSER SHALL BE STAGGERED.
6. SILL PLATE ANCHOR BOLT WASHERS - SHALL BE 0.229" x 3" x 3" STEEL PLATE WASHERS WITH A DIAGONALLY SLOTTED HOLE NO LARGER THAN 3/16" GREATER THAN THE BOLT DIAMETER OR 1 ¾" MAXIMUM. THE WASHER SHALL BE PLACED BETWEEN THE NUT AND SILL PLATE AND SHALL NOT BE OFFSET BY MORE THAN ½" OF THE EDGE OF THE SILL PLATE ON THE SIDE WITH SHEATHING ATTACHMENT.
7. DOUBLE SIDED SHEAR WALLS - MEMBERS SHALL BE 3x AT ALL ADJOINING PANEL EDGES AND NAILS SHALL BE STAGGERED ON EACH SIDE OF THE PANEL BREAK ON EACH SIDE OF THE ADJOINING MEMBER. SILL PLATE FASTENER SPACING SHALL BE REDUCED IN HALF.

14 DRAG CONNECTION AT STEPPED TOP PLATES
SCALE: N.T.S.

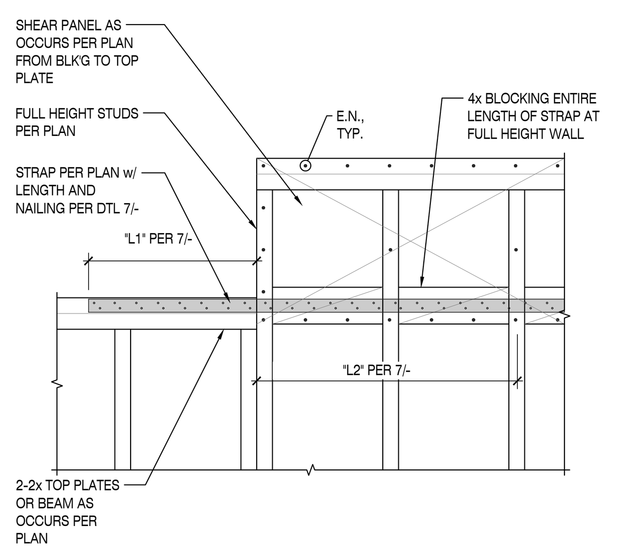

10 NON-BEARING HEADER SCHEDULE
SCALE: N.T.S.

NON-BEARING HEADER SCHEDULE

HEADER SIZE	MAXIMUM SPAN (5'-0" WALL ABOVE)	MAXIMUM SPAN (10'-0" WALL ABOVE)
2x4 FLAT	3'-0"	--
4x4 STD & BTR	6'-6"	4'-6"
4x6 DF NO. 2	10'-0"	9'-6"
4x8 DF NO. 2	12'-0"	12'-0"

4 TOP PLATE AND RIM SPLICE
SCALE: N.T.S.

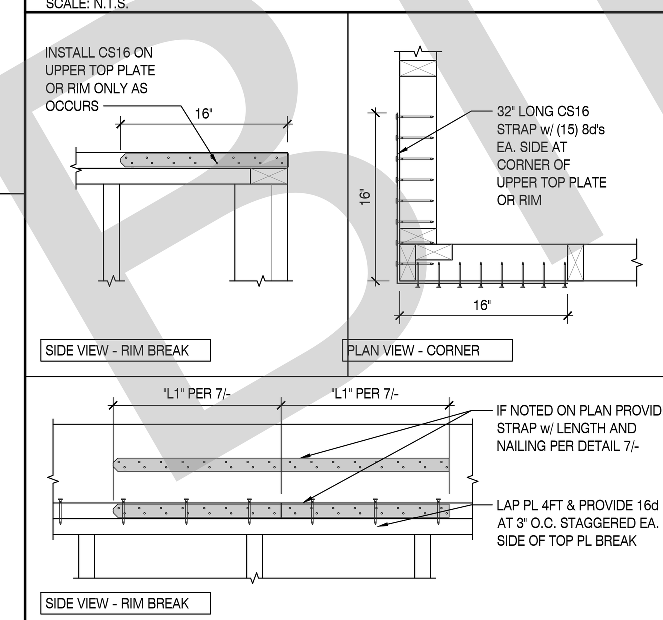

2 HORIZONTAL DIAPHRAGM LAYOUT AND NAILING SCHEDULE
SCALE: N.T.S.

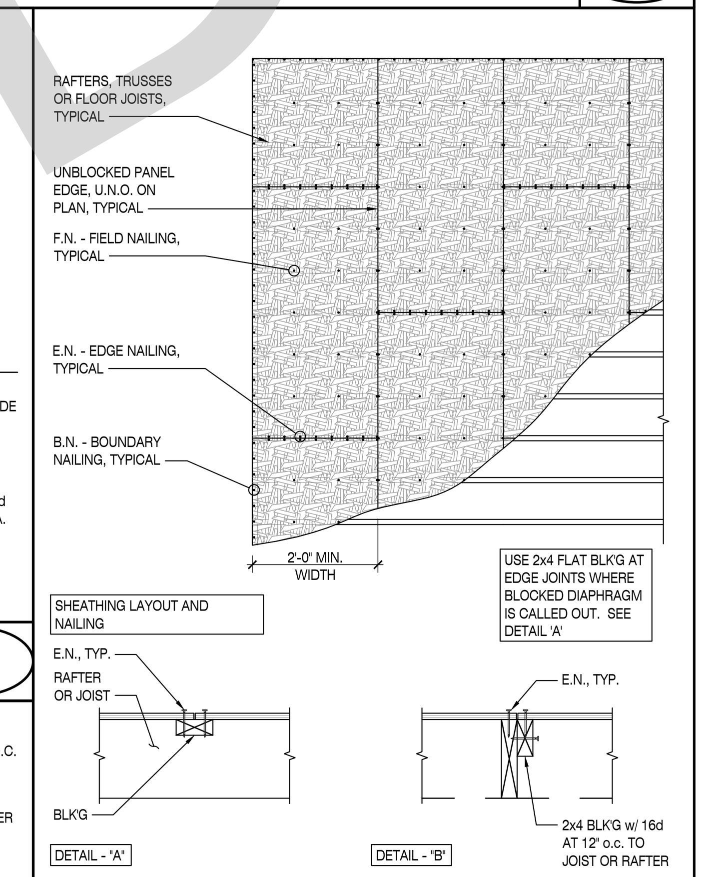

NOTES:

1. RUN LONG DIMENSION OF SHEATHING ACROSS (PERPENDICULAR TO) JOIST AND RAFTERS. PANELS SHALL BE SPACED ⅛" FOR THERMAL EXPANSION.
2. STAGGER END JOINTS 2'-0" MINIMUM.
3. BOUNDARY NAILING APPLIES TO PERIMETER PLATE LINES, CHORDS, TIES, AND AS CALLED FOR ON DRAWINGS.
4. SEE PLANS FOR NAILING AT BLOCKED DIAPHRAGMS.
5. NAILS SHALL HAVE ⅜" MIN. EDGE DISTANCE.
6. ALL JOISTS AND RAFTERS SHALL BE LAID OUT IN 4'-0" MODULE TO COINCIDE WITH THE SHEATHING.
7. USE TONGUE-AND-GROOVE SHEATHING AT FLOORS, UNLESS NOTED OTHERWISE.
8. SEE DETAIL 'B' FOR FRAMING WHERE SHEATHING JOINTS ARE OFFSET DUE TO RAFTER OR JOIST LAP SPLICES.
9. PROVIDE A ⅛" GAP BETWEEN ALL PANEL EDGES TYPICAL.

15 BEAM COLUMN IN STUD WALL
SCALE: N.T.S.

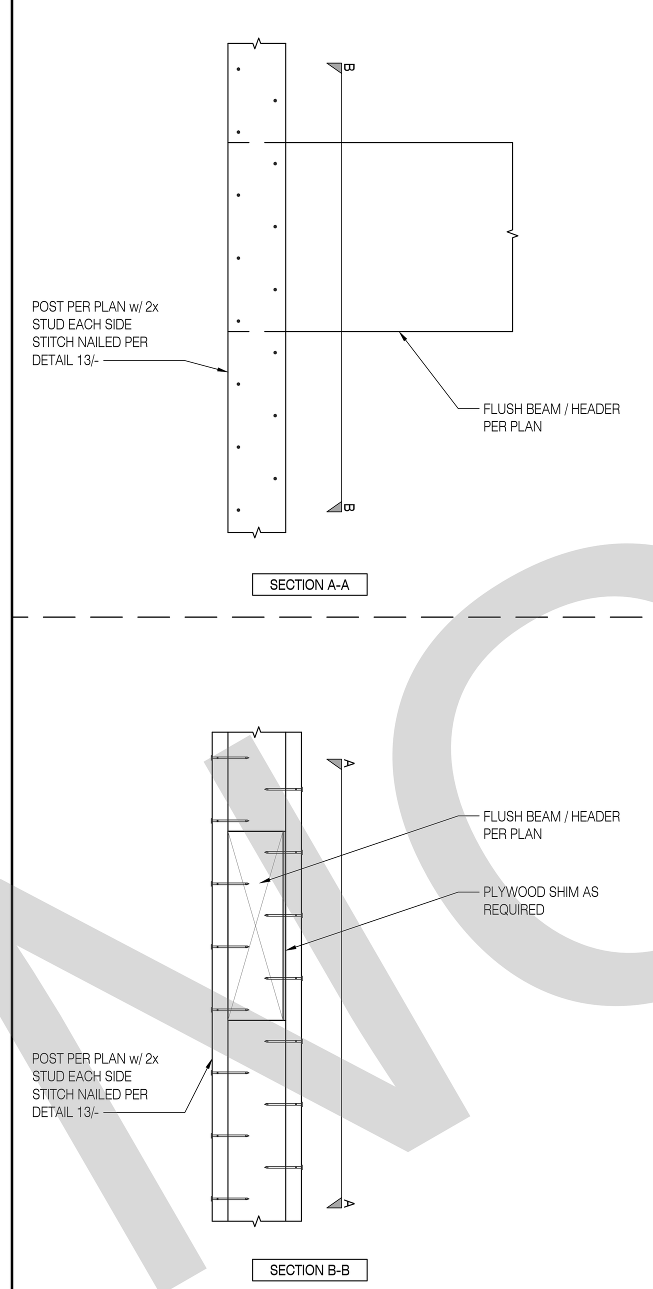

11 JOIST HEAD-OUT FRAMING
SCALE: N.T.S.

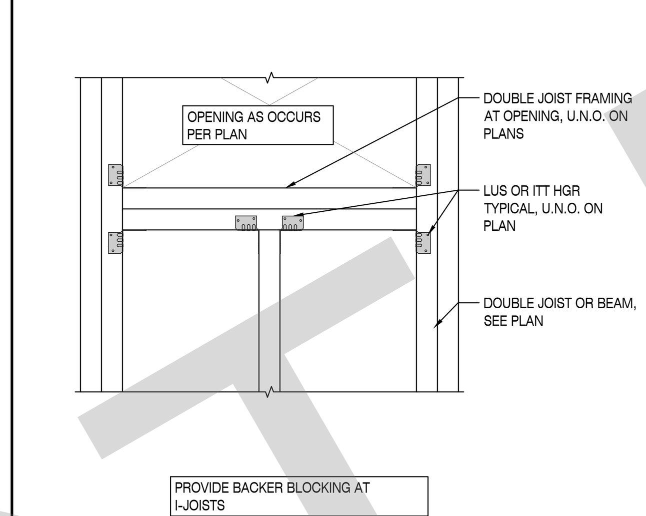

12 COMMON HOLDOWNS AT SHEAR WALLS
SCALE: N.T.S.

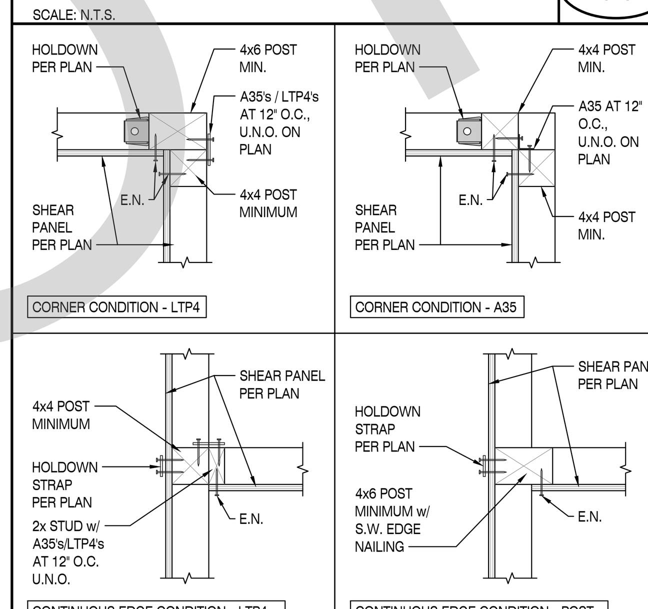

8 NOTCHING AND DRILLING OF STUDS AND TOP PLATES
SCALE: N.T.S.

TOP PLATE NOTCH - STRAP REINFORCING (DTL 4/SD2)

DTL 4/SD2 STRAP SHOWN ON PLANS	NO. OF CTS218 (24-10dx1 ½")**	ALLOW. TENSION, LB	ALLOW. COMP., LB
CS16	2-CTS218	3632	1632
2-CS16	2-CTS218	3632	1632
CMST14	4-CTS218	7264	3792
CMST12	4-CTS218	7264	3792

**REPLACES 4/SD2 COLLECTOR STRAPS CTS218 ICC ES-ESR 2105

STRAPS ONLY REQUIRED AT EXTERIOR WALLS AND INTERIOR BEARING AND SHEAR WALLS

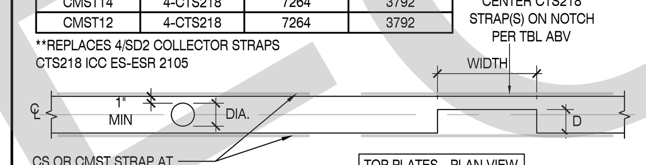

ALLOWABLE NOTCHES AND HOLES IN TOP PLATES

PLATE SIZE	"D" DEPTH	WIDTH	HOLE Ø
2x4	1"	4 ½" MAX	1" MAX
2x6	2"	4 ½" MAX	3" MAX

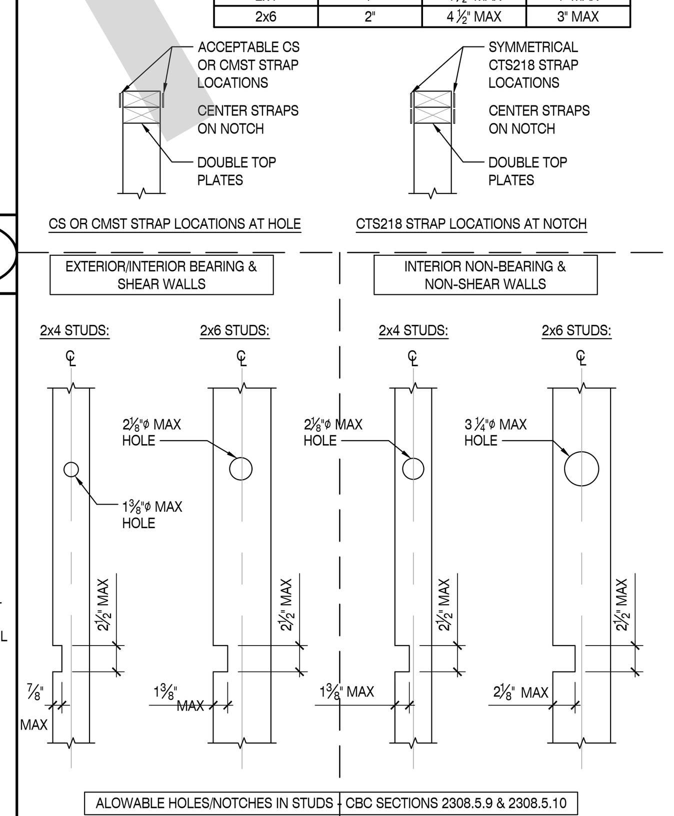

NOTCHED/DRILLED STUD WALL NOTES: (CBC SECTIONS 2308.5.9 & 2308.5.10)

1. DO NOT NOTCH OR DRILL MORE THAN 3 CONSECUTIVE BEARING OR SHEAR WALL STUDS.
2. ALL HOLES SHOULD BE CENTERED ON STUDS, TYPICAL.

5 TYPICAL WOOD STUD WALL AND SHEAR WALL FRAMING
SCALE: N.T.S.

KING STUD / POST REQUIREMENTS

WALL WIDTH	*WIDTH OF WDW/DOOR	# KING STUDS	ALT: POST	***NAILS (PLATE TO KING STUD/POST)
3½"	0'-7'	(1) 2x4	--	(3)-16d (20d AT 3x SILL)
	7'-14'	(2) 2x4	4x4	(6)-16d (20d AT 3x SILL)
	14'-18'	(3) 2x4	4x6	(9)-16d (20d AT 3x SILL)
5½"	0-9'	(1) 2x6	--	(4)-16d (20d AT 3x SILL)
	9'-17'	(2) 2x6	4x6	(8)-16d (20d AT 3x SILL)

* WIDTH IS THE DISTANCE BTW KING STUDS AT EACH SIDE OF WINDOW/DOOR.
** (1) 2x KING STUD REQ'D WHEN FULL HEIGHT HARDY/SIMPSON PANEL IS ADJACENT TO WDW/DOOR, SCREW STUD TO HARDY.
*** NAILS SHOULD BE SPREAD EVENLY TO ALL STUDS OR ALL INTO POST, AT POST CONDITION

WOOD STUD SIZE TABLE

WALL WIDTH	WALL HEIGHT	STUD SIZE AND SPACING
3.5"	< 10'	2x4 AT 16" O.C.
	< 20'	NOT APPLICABLE
5.5"	< 10'	2x6 AT 16" O.C.
	< 20'	2x6 AT 16" O.C.

1. INTERIOR NON-BEARING WALLS MAY USE A STUD SPACING OF 24" ON CENTER.
2. THIS TABLE APPLIES TO STUD WALLS SUPPORTING A MAXIMUM OF (1) FLOOR AND (1) ROOF. THE PLANS SHOULD BE CONSULTED FOR ALTERNATE CONDITIONS.

ALLOWABLE SHEAR WALL PENETRATIONS

1. HOLES UP TO 5" SQ. DO NOT REQUIRE BLK'G & E.N.
2. HOLES FROM 5" SQ. TO 16" SQ. REQUIRE BLK'G & E.N.
3. HOLES LARGER THAN 16" SQ. ARE NOT ALLOWED.
4. HOLE SIZE INCLUDES THE LENGTH OF THE OVERCUT.
5. MAX. ACCUMULATED LENGTH OF OPENINGS SHALL NOT EXCEED 20 PERCENT OF THE WALL LENGTH.
6. OPENING MUST BE A MIN. 12" FROM SILL PLATE, TOP PLATES & END POSTS.
7. RECOMMEND CIRCULAR BORED HOLES OR RADIUS CORNER CUTS.
8. END POSTS SHOULD NOT BE CUT FOR ANY REASON, STUDS & TOP PLATE MAY BE NOTCHED PER DET 8/-.

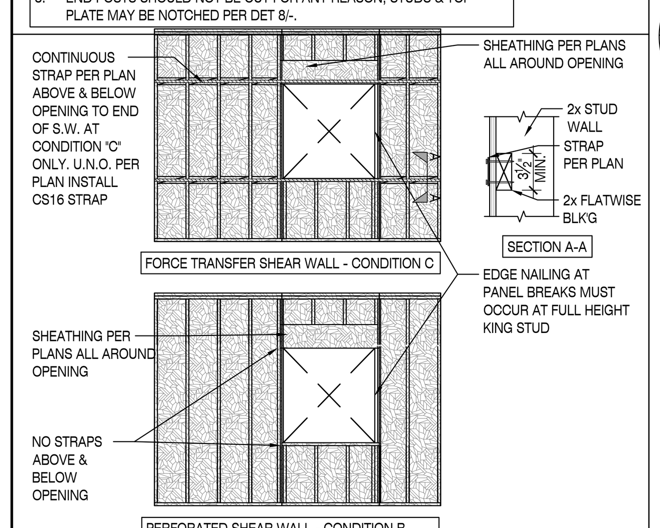

ALL TYPICAL FRAMING SHALL CONFORM TO THE CONVENTIONAL REQUIREMENTS OF THE GOVERNING BUILDING CODE

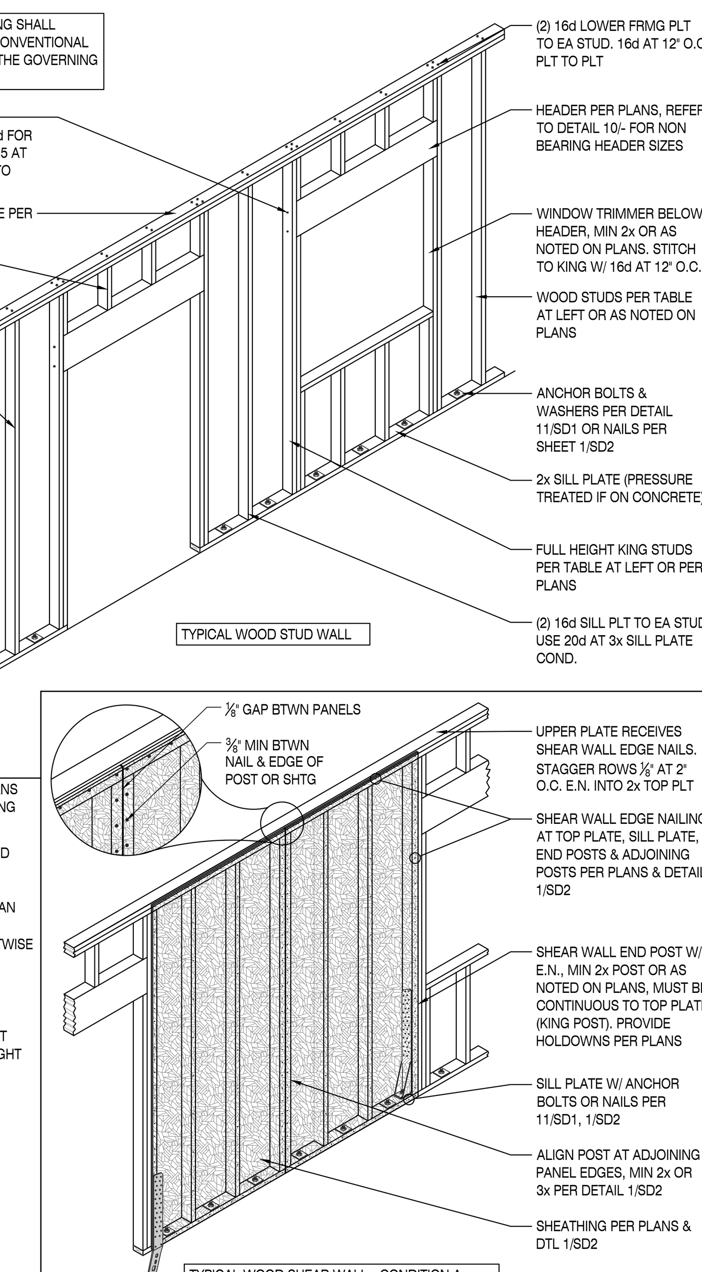

3 HORIZONTAL ROOF AND FLOOR SHEATHING SCHEDULE
SCALE: N.T.S.

HORIZONTAL DIAPHRAGM SCHEDULE - 2019 CBC

SYMBOL (PER PLAN)	MAXIMUM SPACING	PANEL DESCRIPTION	NAIL SIZE	EDGE NAILING	BOUNDARY NAILING	FIELD NAILING
D1	ROOF 24" O.C.	UNBLOCKED DIAPHRAGM 15/32" WOOD STRUCTURAL PANEL, PII 24/O	10d	6" o.c.	6" o.c.	12" o.c.
D2	ROOF 24" O.C.	BLOCKED DIAPHRAGM 15/32" WOOD STRUCTURAL PANEL, PII 24/O	10d	6" o.c.	6" o.c.	12" o.c.
D3	ROOF 24" O.C.	BLOCKED DIAPHRAGM 15/32" WOOD STRUCTURAL PANEL, PII 24/O	10d	4" o.c.	4" o.c.	12" o.c.
D4	ROOF 24" O.C.	BLOCKED DIAPHRAGM 15/32" WOOD STRUCTURAL PANEL, PII 24/O	10d	4" o.c.	2½" o.c.	12" o.c.

NOTES:

1. ALL ROOF SHEATHING TO BE EXPOSURE 1 OR EXTERIOR PER TABLE 2306.3.1. 7/16" SHEATHING IS NOT STRUCTURALLY ACCEPTABLE FOR ROOF SHEATHING.
2. REFER TO CBC TABLE 2306.2.1 FOR INFORMATION NOT PROVIDED.

STK ARCHITECTURE, INC.
42095 ZEVO DR., TEMECULA, CALIFORNIA 92590-3780
Phone: 951.296.9110 Fax: 951.296.6079 Email: stk@stkinc.com

CONSULTANT:

INNOVATIVE
STRUCTURAL ENGINEERING
27369 VIA INDUSTRIA
TEMECULA, CA 92590
TELE: 951.600.0032
WWW.ISEENGINEERS.COM
SOCAL | NORCAL | COLORADO
ISE PROJECT NO.: 22-7067
PROJECT MANAGER:
SANDY FONG EXT. 1016
SANDY@ISEENGINEERS.COM

PROJECT ADMINISTERED BY:

SAN BERNARDINO COUNTY REAL ESTATE SERVICES DEPARTMENT - PROJECT MANAGEMENT DIVISION

385 N. ARROWHEAD AVE.
SAN BERNARDINO, CA 92415

PROJECT NAME:

SAN BERNARDINO COUNTY FIRE DEPARTMENT:
FIRE STATION 226

PROJECT # 10.10.1032

CIP # ______

CAFM # ______

1920 DEL ROSA AVE N.
SAN BERNARDINO,
CA 92404

ISSUE INFORMATION:

DATE:	INFORMATION:
10-03-2022	PLAN CHECK

SHEET INFORMATION:

STK PROJECT NO.: 374-154-21
SCALE: AS NOTED
DATE: SEPTEMBER 2022
PLOT DATE: 09-28-2022
DRAWING NAME:

SEAL:

SHEET TITLE:

GENERAL WOOD FRAMING DETAILS

SHEET NO.:

SD2

09/28/2022 12:13PM W:\7067\02 - Drawings\Details.dwg

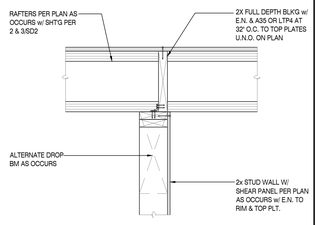

ROOF TO INTERIOR SHEAR WALL - PERPENDICULAR CONDITION 14
SCALE: N.T.S.

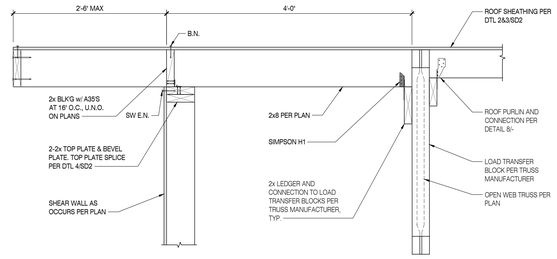

APPARATUS ROOF TO EXTERIOR WALL - PARALLEL TRUSS CONDITION 7
SCALE: N.T.S.

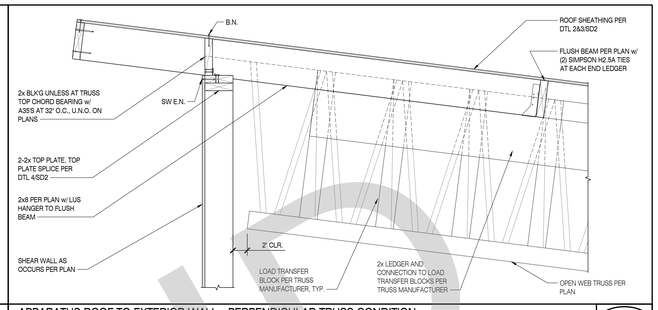

APPARATUS ROOF TO EXTERIOR WALL - PERPENDICULAR TRUSS CONDITION 1
SCALE: N.T.S.

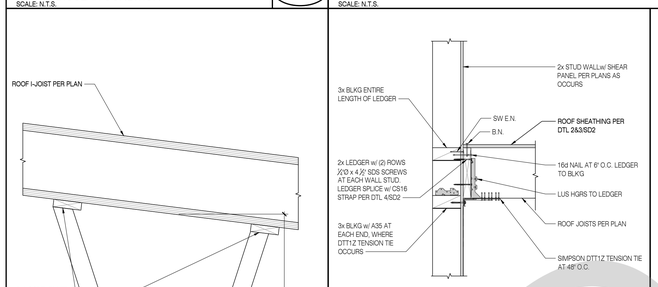

ENTRY ROOF TO EXTERIOR WALL CONNECTION 11
SCALE: N.T.S.

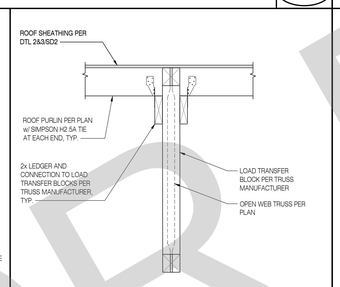

ROOF PURLIN TO OPEN WEB TRUSS CONNECTION 8
SCALE: N.T.S.

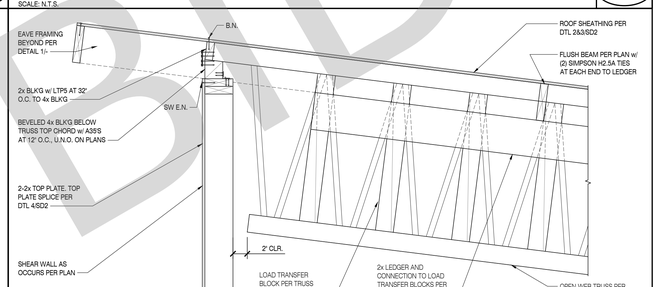

OPEN WEB TRUSS TO EXTERIOR WALL 2
SCALE: N.T.S.

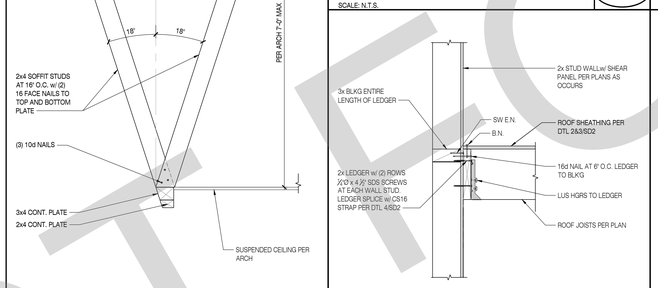

DAY ROOM SOFFIT FRAMING 15
SCALE: N.T.S.

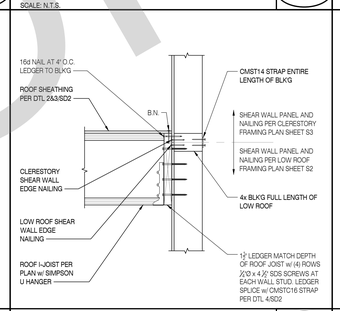

LOW ROOF TO CLERESTORY WALL 9
SCALE: N.T.S.

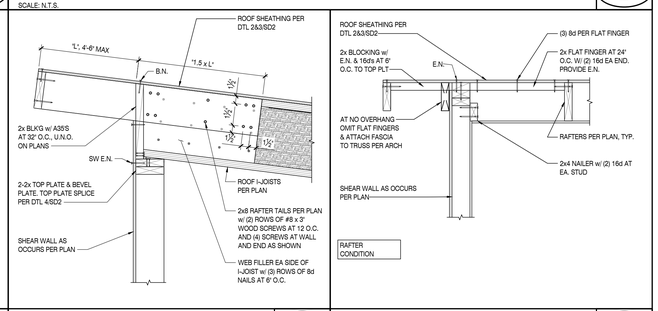

I-JOIST ROOF AT EXTERIOR WALL - PERPENDICULAR CONDITION 5
SCALE: N.T.S.

RAFTER ROOF AT EXTERIOR WALL - PARALLEL CONDITION 3
SCALE: N.T.S.

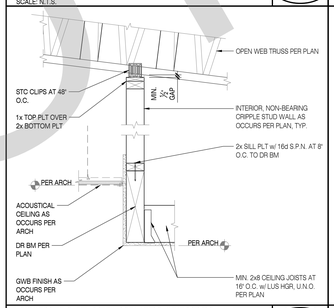

DINING AREA TO KITCHEN CEILING SOFFIT TRANSITION 16
SCALE: N.T.S.

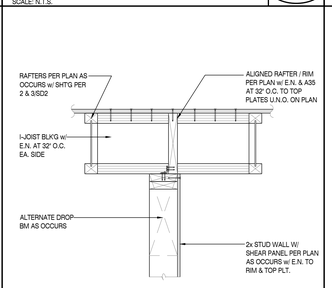

ROOF TO INTERIOR SHEAR WALL - PARALLEL CONDITION 13
SCALE: N.T.S.

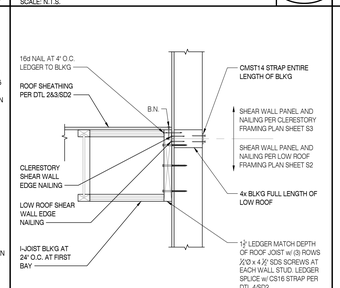

LIVING AREA ROOF TO APPARATUS WALL 10
SCALE: N.T.S.

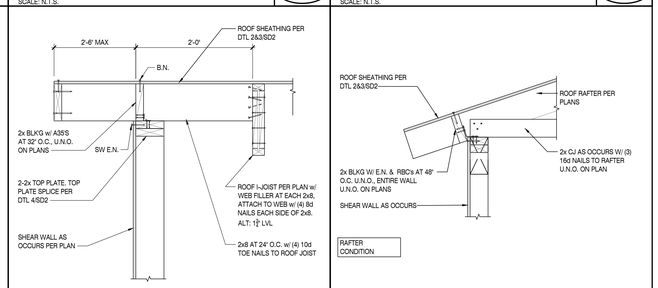

I-JOIST ROOF AT EXTERIOR WALL - PARALLEL CONDITION 6
SCALE: N.T.S.

RAFTER ROOF AT EXTERIOR WALL - PERPENDICULAR CONDITION 4
SCALE: N.T.S.

NOT FOR BID

STK
42095 ZEVO DR., TEMECULA, CALIFORNIA 92590-3780
Phone: 951.296.9110 Fax: 951.296.6079 Email: stk@stkinc.com

CONSULTANT:

INNOVATIVE
STRUCTURAL ENGINEERING
27368 VIA INDUSTRIA
TEMECULA, CA 92590
WWW.ISEENGINEERS.COM
SOCAL | NORCAL | COLORADO
ISE PROJECT NO.: 22-7067

PROJECT MANAGER:
SANDY FONG EXT. 1016
SANDY@ISEENGINEERS.COM

PROJECT ADMINISTERED BY:
SAN BERNARDINO COUNTY
REAL ESTATE SERVICES
DEPARTMENT -
PROJECT MANAGEMENT
DIVISION

385 N. ARROWHEAD AVE.
SAN BERNARDINO, CA 92415

PROJECT NAME:
SAN BERNARDINO
COUNTY FIRE
DEPARTMENT:
FIRE STATION 226

PROJECT # 10.10.1032

CIP # _____

CAFM # _____

1920 DEL ROSA AVE N.
SAN BERNARDINO,
CA 92404

ISSUE INFORMATION:

DATE:	INFORMATION:
10-03-2022	PLAN CHECK

SHEET INFORMATION:

STK PROJECT NO.: 374-154-21
SCALE: AS NOTED
DATE: SEPTEMBER 2022
PLOT DATE: 09-28-2022
DRAWING NAME:

SEAL:

REGISTERED PROFESSIONAL ENGINEER
SANDY FONG
C80965
CIVIL
STATE OF CALIFORNIA

SHEET TITLE:

ROOF FRAMING
DETAILS

SHEET NO.:

SD3

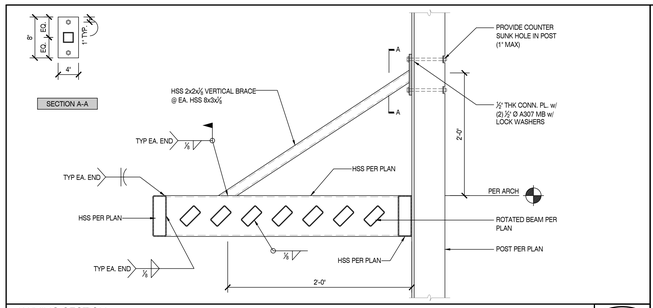

AWNING SECTION 3

SCALE: N.T.S.

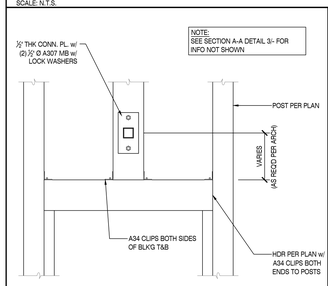

FRAMING AT AWNING BRACE CONNECTION ABOVE WINDOW/DOOR HEADER 5

SCALE: N.T.S.

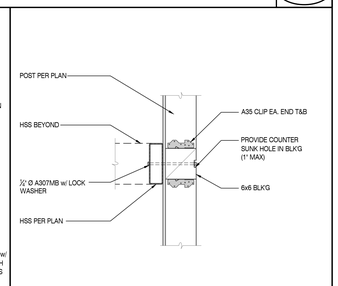

AWNING CONNECTION TO WALL 4

SCALE: N.T.S.

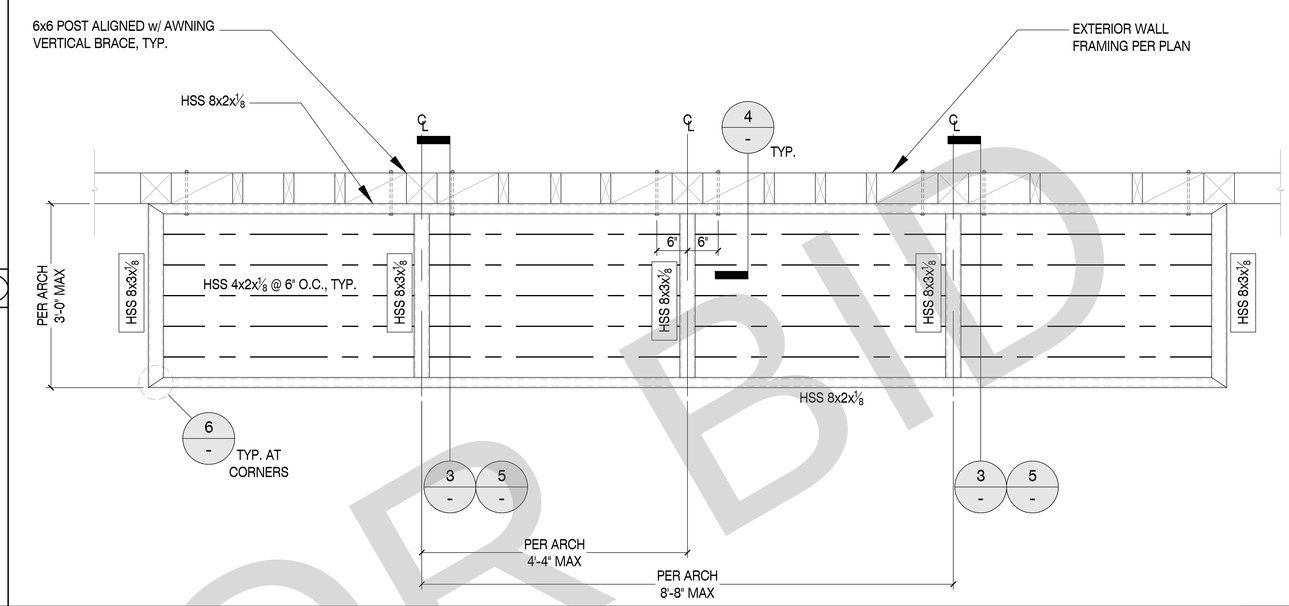

AWNING FRAMING AT FITNESS CENTER WALL 1

SCALE: N.T.S.

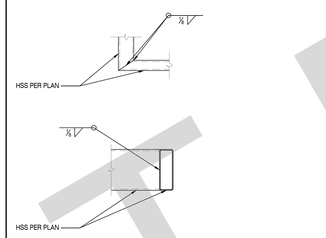

HSS BEAM END CONNECTION 6

SCALE: N.T.S.

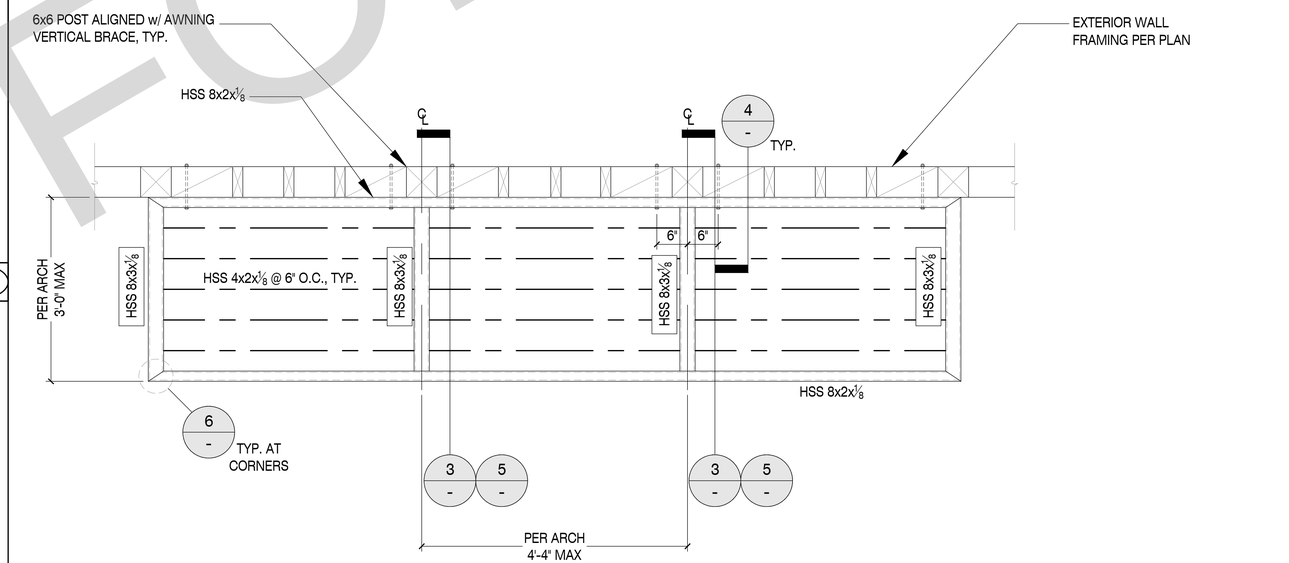

AWNING FRAMING AT ENTRANCE 2

SCALE: N.T.S.

NOT FOR BID

STK
42095 ZEVO DR., TEMECULA, CALIFORNIA 92590-3780
Phone: 951.296.9110 Fax: 951.296.6079 Email: stk@stkinc.com

CONSULTANT:

INNOVATIVE
STRUCTURAL ENGINEERING
27368 VIA INDUSTRIA
TEMECULA, CA 92590
TEL: 951.676.2388
WWW.ISEENGINEERS.COM
SOCAL | NORCAL | COLORADO
ISE PROJECT NO.: 22-7067

PROJECT MANAGER:
SANDY FONG EXT. 1016
SANDY@ISEENGINEERS.COM

PROJECT ADMINISTERED BY:

SAN BERNARDINO COUNTY
REAL ESTATE SERVICES
DEPARTMENT -
PROJECT MANAGEMENT
DIVISION

385 N. ARROWHEAD AVE.
SAN BERNARDINO, CA 92415

PROJECT NAME:

SAN BERNARDINO
COUNTY FIRE
DEPARTMENT:

FIRE STATION 226

PROJECT # 10.10.1032

CIP # _____

CAFM # _____

1920 DEL ROSA AVE N.
SAN BERNARDINO,
CA 92404

ISSUE INFORMATION:

DATE:	INFORMATION:
10-03-2022	PLAN CHECK

SHEET INFORMATION:

STK PROJECT NO.:	374-154-21
SCALE:	AS NOTED
DATE:	SEPTEMBER 2022
PLOT DATE:	09-28-2022
DRAWING NAME:	

SEAL:

REGISTERED PROFESSIONAL ENGINEER
SANDY FONG
C89965
CIVIL
STATE OF CALIFORNIA

SHEET TITLE:

AWNING FRAMING
DETAILS

SHEET NO.:

SD3.1

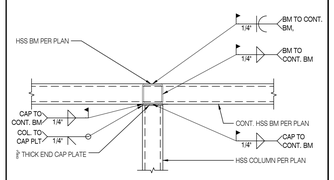

BEAM-COLUMN, BOTH DIRECTIONS

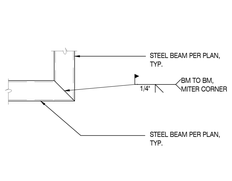

BEAM-BEAM, MITERED CORNER

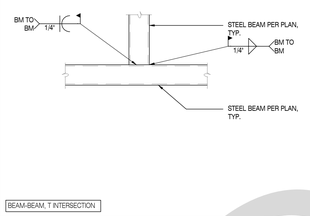

BEAM-BEAM, T INTERSECTION

HSS TO HSS WELDED CONNECTIONS (14)

SCALE: N.T.S.

METAL DECK DIAPHRAGM SCHEDULE

DECK MARK	GALVANIZED (GAG) VERSICO DECK TYPE	ALLOWABLE SPAN	GAGE	DECK PROPERTIES: MIN. Ix (in4)	DECK PROPERTIES: MIN. +Sx (in4)	DECK PROPERTIES: MIN. -Sx (in4)	DECK ATTACHMENT: SIDE LAPS: #10 SCREW SPACING	DECK ATTACHMENT: SCREWS TO SUPPORTS: #12 SCREWS SPACING AT DECK RIBS PARALLEL TO SUPPORT	DECK ATTACHMENT: SCREWS TO SUPPORTS: #12 SCREWS PER SHEET AT DECK RIBS PERPENDICULAR TO SUPPORT	ALLOWABLE DIAPHRAGM LATERAL SHEAR LOAD
D1	HSB-36-SS	8'-6"	18	0.302	0.314	0.331	24"	12"	4	383 PLF
D2	HSN3-NS	11'-0"	22	0.721	0.353	0.405	24"	8"	5	182 PLF

1. REFER TO FRAMING PLANS FOR APPLICATION LOCATIONS.
2. ROOF DECK ATTACHMENTS TO SUPPORTS (MIN. 0.0385 INCHES THICK) SHALL BE MADE BY #12 SELF-DRILLING, SELF-TAPPING, SDI RECOGNIZED SCREWS FROM BUILDEX, ELCO, HILTI, AND SIMPSON STRONG TIE PER THE SCHEDULE ABOVE & AS INDICATED BELOW.
3. ALL DECKS SHALL BE CONTINUOUS OVER SINGLE SPANS AND CANTILEVERS.
4. THE DIMENSION FROM THE FIRST AND LAST SIDELAP CONNECTION WITHIN EACH SPAN IS TO BE NO MORE THAN ONE-HALF OF THE SPECIFIED SPACING.

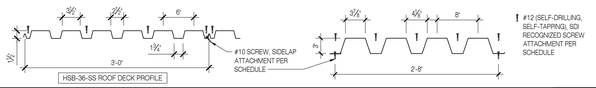

METAL DECK DIAPHRAGM SCHEDULE (12)

SCALE: N.T.S.

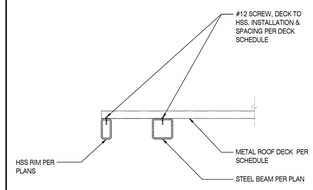

DECK RIBS PERPENDICULAR TO EDGE SUPPORT

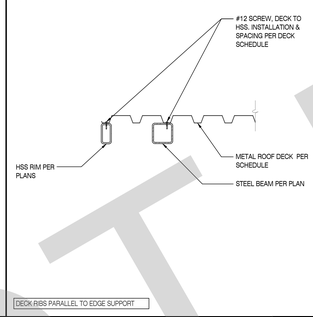

DECK RIBS PARALLEL TO EDGE SUPPORT

METAL DECK TO HSS (13)

SCALE: N.T.S.

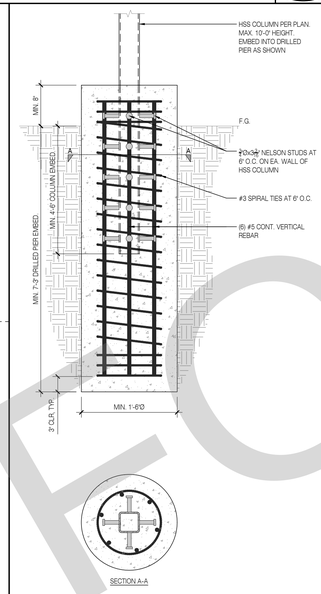

FUEL GENERATOR/TANK CANOPY, DRILLED PIER (10)

SCALE: N.T.S.

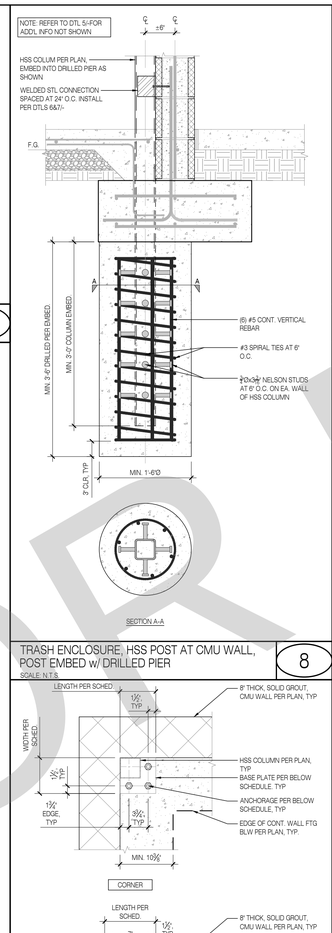

TRASH ENCLOSURE, HSS POST AT CMU WALL, POST EMBED w/ DRILLED PIER (8)

SCALE: N.T.S.

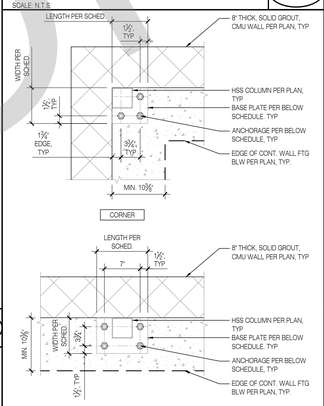

BASE PLATE CONDITION	BASE PLATE: THICK	BASE PLATE: LENGTH	BASE PLATE: WIDTH	ANCHORAGE: DIA.	ANCHORAGE: LENGTH	ANCHORAGE: TYPE	ANCHORAGE: NO.
CORNER	3/8"	7"	7"	3/4"	6½"	TITEN HD	3
MIDWALL	3/8"	10"	7"	3/4"	6½"	TITEN HD	4

NOTES:
1. WELD "W" SHALL BE PER AISC MINIMUM BASED ON MATERIAL THICKNESS OF THICKER PART JOINED, BUT NOT EXCEED THE MATERIAL THICKNESS OF THE THINNER PART JOINED.

LESS THAN 1/4"	"W" = 1/8"
1/4" TO 1/2"	"W" = 3/16"
1/2" TO 3/4"	"W" = 1/4"
GREATER THAN 3/4"	"W" = 5/16"

2. ANCHOR RODS ARE SIMPSON TITEN HD, HEAVY-DUTY, SCREW ANCHORS (ESR-1056). INSTALL PER MNFR. REQUIREMENTS.
3. WHERE COLUMN IS PART OF A FRAME, USE SPECIFIC DETAILS REFERENCED ON PLAN OR ELEVATION.

TRASH ENCLOSURE, TYP COLUMN & BASE PLATE (9)

SCALE: N.T.S.

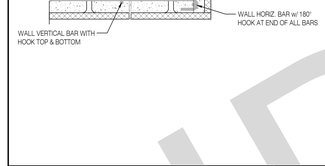

TYPICAL MASONRY JAMB BAR (4)

SCALE: N.T.S.

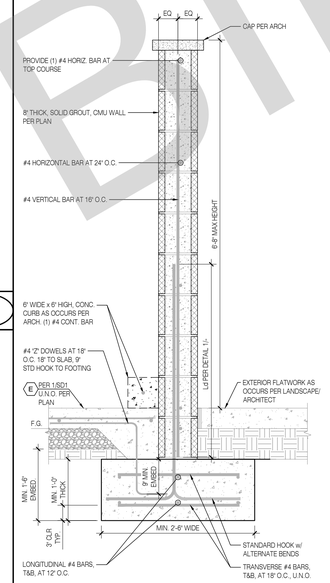

TRASH ENCLOSURE, TYPICAL FREE-STANDING CMU WALL FOOTING (5)

SCALE: N.T.S.

REBAR SPLICE & DEVELOPMENT LENGTH Ld IN MASONRY							
MASONRY STRENGTH (PSI)	SPLICE & DEVELOPMENT LENGTH IN MASONRY (INCHES)						
	#3	#4	#5	#6	#7	#8	#9
1,500	15	25	39	74	100	151	192
1,800	14	23	36	67	91	138	175
2,000	13	22	34	64	87	131	166
2,500	12	20	30	57	78	117	149

1. f'm = 60,000 psi
2. VERTICAL SPLICES IN REBAR SHOULD BE STAGGERED 24" MINIMUM
3. INCREASE DISTANCE 50% FOR EPOXY COATED BARS
4. LAP SPLICES SHALL BE STAGGERED VERTICALLY 24 BAR DIAMETERS

TYPICAL REBAR SPLICE AND DEVELOPMENT IN MASONRY (1)

SCALE: N.T.S.

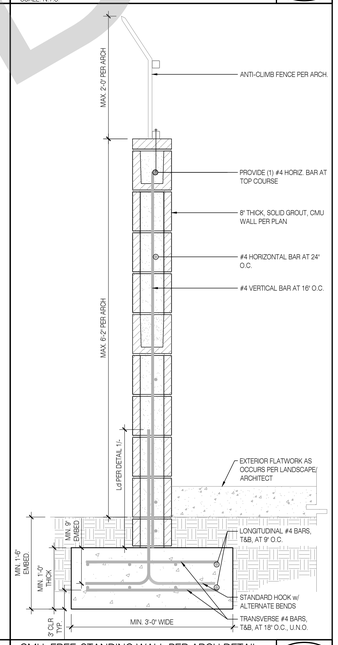

CMU, FREE-STANDING WALL PER ARCH DETAIL 8C/A1.2 (2)

SCALE: N.T.S.

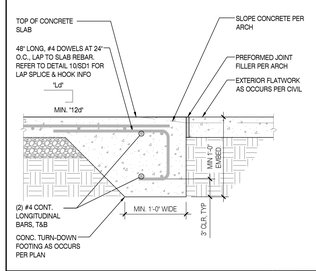

TRASH ENCLOSURE, CONCRETE TURN-DOWN FOOTING (11)

SCALE: N.T.S.

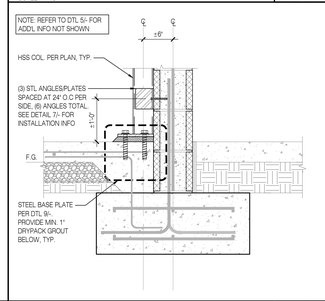

TRASH ENCLOSURE, HSS POST AT CMU WALL, BASE PLATE (6)

SCALE: N.T.S.

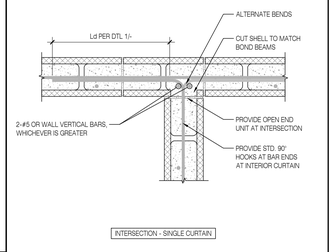

INTERSECTION - SINGLE CURTAIN

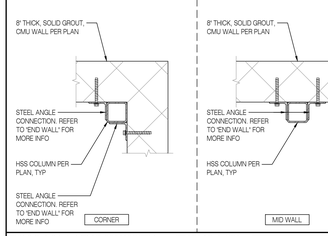

NOTE: FOR SIMPSON TITEN HD ANCHOR (ESR-1056), PROVIDE MIN. 3" EDGE, 12" END, 12" SPACING, AND 4½" EMBED INTO CMU.

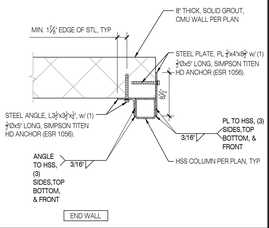

HSS POST TO CMU WALL, STEEL ANGLE/PLATE CONNECTIONS (7)

SCALE: N.T.S.

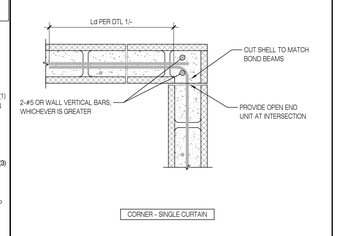

CORNER - SINGLE CURTAIN

TYPICAL CMU WALL CONSTRUCTIONS AT CORNERS & INTERSECTIONS (3)

SCALE: N.T.S.

NOT FOR BID

STK
SCI TECH | SINCE 1991
42095 ZEVO DR., TEMECULA, CALIFORNIA 92590-3780
Phone: 951.296.9110 Fax: 951.296.6079 Email: sitk@stkinc.com

CONSULTANT:

INNOVATIVE STRUCTURAL ENGINEERING
27368 VIA INDUSTRIA
TEMECULA, CA 92590
TEL: 951.296.9500
WWW.ISEENGINEERS.COM
SOCAL | NORCAL | COLORADO
ISE PROJECT NO.: 22-7067

PROJECT MANAGER:
SANDY FONG EXT. 1016
SANDY@ISEENGINEERS.COM

PROJECT ADMINISTERED BY:
SAN BERNARDINO COUNTY REAL ESTATE SERVICES DEPARTMENT - PROJECT MANAGEMENT DIVISION

385 N. ARROWHEAD AVE.
SAN BERNARDINO, CA 92415

PROJECT NAME:
SAN BERNARDINO COUNTY FIRE DEPARTMENT:
FIRE STATION 226

PROJECT # 10.10.1032

CIP # _____

CAFM # _____

1920 DEL ROSA AVE N.
SAN BERNARDINO,
CA 92404

ISSUE INFORMATION:

DATE:	INFORMATION:
10-03-2022	PLAN CHECK

SHEET INFORMATION:

STK PROJECT NO.: 374-154-21
SCALE: AS NOTED
DATE: SEPTEMBER 2022
PLOT DATE: 09-28-2022
DRAWING NAME:

SEAL:

REGISTERED PROFESSIONAL ENGINEER
SANDY FONG
C85985
CIVIL
STATE OF CALIFORNIA

SHEET TITLE:
SITE STRUCTURES - ADDITIONAL DETAILS

SHEET NO.:
SD4

09/28/2022 12:16PM W:\10\10.1032\Drawings\Drawings-Site Site Structures.dwg

NOT FOR BID

GENERAL NOTES

1. THESE DOCUMENTS MAY NOT BE USED FOR ANY REPRODUCTION, BIDDING, OR CONSTRUCTION UNLESS AUTHORIZED, IN WRITING, BY SALAS O'BRIEN AND THE ENGINEER OF RECORD RESPONSIBLE FOR THEIR PREPARATION.
2. ALL BRANCH DUCTS SHALL HAVE BALANCE DAMPERS WITH QUADRANT LOCKS.
3. ALL DUCT SIZES SHOWN ARE NET INSIDE DIMENSIONS.
4. DUCTWORK SHALL BE GALVANIZED SHEET METAL IN COMPLETE CONFORMANCE WITH C.M.C., AND SMACNA HVAC DUCT CONSTRUCTION STANDARDS. FLEXIBLE DUCTS MAY BE USED TO CONNECT INTO AIR OUTLETS AND INLETS. MAXIMUM LENGTH OF FLEXIBLE DUCTWORK SHALL BE 5'–0''.

   DUCTWORK ON ROOF SHALL BE INTERNALLY LINED AND PAINTED. ALL JOINTS AND SEAMS SHALL BE WEATHERPROOF.

   ALL BRACING OF DUCTS AND PIPING SHALL BE INSTALLED IN ACCORDANCE WITH SMACNA GUIDELINES.

   DUCTS SERVING TYPE 1 KITCHEN HOODS SHALL BE CONSTRUCTED OF MINIMUM 16 GAUGE CARBON STEEL OR MINIMUM 18 GAUGE STAINLESS STEEL WITH FULLY WELDED JOINTS. DISHWASHER EXHAUST SHALL BE MINIMUM 18 GAUGE STAINLESS STEEL.
5. ALL FLEXIBLE DUCTS SHALL BE INSULATED. MINIMUM BEND RADIUS SHALL BE TWICE THE DUCT DIAMETER.
6. SUPPLY AND RETURN DROPS SHALL BE LINED SHEET METAL PLENUMS.
7. DUCT AND PLENUM INSULATION SHALL BE IN ACCORDANCE WITH THE 2019 CALIFORNIA CODE OF REGULATIONS, TITLE–24, PART 6, ENERGY EFFICIENCY STANDARDS (E.E.S.), TABLE 150.1–A AND THE 2019 CALIFORNIA MECHANICAL CODE (C.M.C.) SECTION 604.0.
8. ALL SHEET METAL DUCTS SHALL BE INSULATED BY MEANS OF FOIL WRAP, 3/4 LB. DENSITY FIBERGLASS INSULATION. INSULATION SHALL BE UL LISTED. DUCT LINERS SHALL BE NON–FIBERGLASS TYPE WITH THICKNESS AS REQUIRED TO MEET T–24 REQUIREMENTS.
9. THERMOSTATS SHALL BE LOCATED AT 4' – 0'' ABOVE FINISHED FLOOR (46'' MAX. IF MOUNTED OVER CASEWORK OR OTHER OBSTRUCTION) IN ACCORDANCE WITH A.D.A. REQUIREMENTS, UNLESS NOTED OTHERWISE.
10. CONDENSATE DRAIN PIPING SHALL BE COPPER TYPE ''L'', AND SHALL BE ROUTED TO AN APPROVED RECEPTOR.
11. PROVIDE FLEXIBLE CONNECTIONS AT THE INLET AND OUTLET OF ALL FANS.
12. COORDINATE FINAL LOCATIONS OF AIR DISTRIBUTION DEVICES WITH THE ARCHITECTURAL REFLECTED CEILING PLANS, I.E. LIGHTS, SPEAKERS, TILES AND SPRINKLER HEADS.
13. ALL SUPPLY CEILING DIFFUSERS SHALL HAVE 4–WAY AIR FLOW DISTRIBUTION PATTERNS, UNLESS INDICATED OTHERWISE.
14. COORDINATE FINAL LOCATIONS OF THERMOSTATS WITH ARCHITECT AND OWNER'S REPRESENTATIVE PRIOR TO INSTALLATION. FIELD COORDINATE LOCATIONS WITH OTHER TRADES INCLUDING ELECTRICAL, TELEPHONE, ETC.
15. FIRE/SMOKE DAMPERS SHALL BE INSTALLED ON ALL DUCTWORK PASSING THROUGH FIRE SEPARATING WALLS, AND SHALL BE INSTALLED AS PER 2019 CMC SECTION 605.0, 2019 CBC SECTION 717. AND UL,, LOCAL, STATE, AND N.F.P.A. FIRE CODES.
16. ALL ROOF PENETRATIONS, CUTTING, PATCHING, BLOCKOUTS, STRUCTURAL SUPPORT, ROOF OPENINGS, LEVELING OF PRE–FAB CURBS SHALL BE BY GENERAL CONTRACTOR. CONTRACTOR SHALL VERIFY EXACT ROOF OPENING SIZES WITH UNIT MANUFACTURER PRIOR TO START OF WORK AND SHALL MAKE ALL NECESSARY ADJUSTMENTS AT NO EXTRA COST TO OWNER.
17. LOCATION OF ALL MECHANICAL EQUIPMENT SHOWN ARE SCHEMATIC. CONTRACTOR SHALL FIELD COORDINATE EXACT LOCATIONS AND REQUIRED SERVICE/MAINTENANCE CLEARANCES PRIOR TO START OF WORK.
18. CONTRACTOR SHALL VERIFY WEIGHTS OF ALL MECHANICAL EQUIPMENT WITH THEIR MANUFACTURER PRIOR TO START OF WORK. IF DIFFERENT THAN THE WEIGHTS INDICATED ON DRAWINGS, CONTRACTOR SHALL INFORM THE ARCHITECT AND STRUCTURAL ENGINEER PRIOR TO START OF WORK.
19. CONTRACTOR SHALL VERIFY ALL ELECTRICAL LOADS W/MFR. AND COORDINATE WITH THE ELECTRICAL CONTRACTOR AND THE MANUFACTURER PRIOR TO START OF WORK. NOTIFY THE ARCHITECT, IN WRITING, IN CASE OF ANY DISCREPANCIES, PRIOR TO START OF WORK.
20. ALL HVAC EQUIPMENT, APPLIANCES, AND DUCTWORK SHALL CONFORM TO THE LATEST GUIDELINES OF U.L., A.G.A., N.F.P.A., C.M.C., C.P.C., AND ALL OTHER LOCAL CODES HAVING JURISDICTION.
21. TEST AND BALANCE THE HVAC SYSTEM AS PER REQUIREMENTS OF THE MANDATORY HVAC MEASURES INDICATED ON THIS SHEET.
22. CONTRACTOR SHALL FIELD VERIFY EXACT CEILING SPACE AVAILABLE FOR ROUTING OF DUCT, PRIOR TO START OF WORK, INFORM ARCHITECT, IN WRITING, IN CASE OF ANY DISCREPANCY OR POTENTIAL CONFLICTS PRIOR TO FABRICATING AND/OR PURCHASE OF ANY DUCTWORK.
23. ALL HVAC UNITS SYSTEMS WITH 2000 CFM OR MORE OR SERVING A COMMON AIR SPACE MUST BE INTERCONNECTED TO SHUT DOWN IMMEDIATELY UPON ALARM CONDITION FROM DUCT DETECTORS (OR FIRE ALARM SYSTEM WHEN USING AREA SMOKE DETECTORS IN LIEU OF DUCT DETECTORS) WITHOUT INTERFACE FROM EMS OR ANY OTHER SYSTEMS. ALL CONTROL RELAYS USED FOR SHUT DOWN MUST BE CALIFORNIA STATE FIRE MARSHAL LISTED FOR RELEASING SERVICE.
24. ACCESS PANELS SHALL BE PROVIDED TO ALL EQUIPMENT, MANUAL VOLUME DAMPERS, ETC. LOCATED IN INACCESSIBLE AREAS.
25. MAINTAIN MINIMUM 10'–0" BETWEEN ALL OA INTAKES AND EXHAUST AIR DISCHARGES OR VENTS.

LEGEND

SYMBOL	ABBREV.	DESCRIPTION
		DEMOLITION
		ITEM TO BE RELOCATED
		FLEXIBLE CONNECTION, DUCTWORK
	10x6	DUCT SIZE (1ST NUMBER INDICATES SIDE SHOWN)
	(L)	INTERNALLY LINED DUCTWORK
	TV	SQUARE ELBOW WITH TURNING VANES
		ROUND ELBOW
	MVD	MANUAL VOLUME DAMPER
	BD	BACKDRAFT DAMPER
		FLEXIBLE DUCTWORK
	FSD	FIRE SMOKE DAMPER
	OA	OUTSIDE AIR
		ROUND DUCT UP
		CEILING SUPPLY AIR DIFFUSER (4–WAY THROW UNLESS NOTED OTHERWISE)
	SA	SUPPLY AIR
	RR/RG	RETURN AIR REGISTER/GRILLE
	RA	RETURN AIR
	ER/EG	EXHAUST AIR REGISTER/GRILLE
	EA	EXHAUST AIR
	AP	CEILING ACCESS PANEL
		RECTANGULAR SUPPLY DUCT UP
		RECTANGULAR RETURN DUCT UP
	EA	RECTANGULAR EXHAUST DUCT UP
T	TSTAT	THERMOSTAT
H	HSTAT	HUMIDISTAT
S		WALL SWITCH/WALL STAT
CO	CO	CARBON MONOXIDE SENSOR
CO_2	CO_2	CARBON DIOXIDE SENSOR
SD	SD	DUCT MOUNTED SMOKE DETECTOR INTERLOCK WITH FIRE ALARM. SEE ELECT. DWGS.
TC	TC	TIME CLOCK (ELECTRONIC PROGRAMMABLE)
TS	TS	TIMER SWITCH
	POC	POINT OF CONNECTION
	POD	POINT OF DISCONNECT
₵	CFM	CUBIC FEET PER MINUTE
—CHWR—	CHWR	CHILLED WATER RETURN
—CHWS—	CHWS	CHILLED WATER SUPPLY
—HHWR—	HHWR	HEATING HOT WATER RETURN
—HHWS—	HHWS	HEATING HOT WATER SUPPLY
	ACI	AMERICAN CONCRETE INSTITUTE
	A.D.A.	AMERICANS WITH DISABILITIES ACT
	A.F.F.	ABOVE FINISH FLOOR
	A.G.A.	AMERICAN GAS ASSOCIATION
	AL	ALUMINUM
	AMB.	AMBIENT
	APRX.	APPROXIMATE(LY)
	ARCH.	ARCHITECT OR ARCHITECTURAL
	ASCE	AMERICAN SOCIETY OF CIVIL ENGINEERS
	BHP	BRAKE HORSEPOWER
	BLDG	BUILDING
	BTU(H)	BRITISH THERMAL UNIT (PER HOUR)
	B.U.R.	BUILT–UP ROOFING
	CAP.	CAPACITY
	C.B.C.	CALIFORNIA BUILDING CODE
	C.E.C.	CALIFORNIA ENERGY COMMISSION
	C.M.C.	CALIFORNIA MECHANICAL CODE
	C.P.C.	CALIFORNIA PLUMBING CODE
	CD	CONDENSATE DRAIN
	CGBSC	CALIFORNIA GREEN BUILDING STANDARDS COMMISSION
	CHW	CHILLED WATER
	CONC.	CONCRETE
	COND.	CONDITIONS
	CONN.	CONNECTIONS
	COORD.	COORDINATE
	C.O.P.	COEFFICIENT OF PERFORMANCE
	CORR.	CORRIDOR
	CU	COPPER
	CW	COLD WATER
	DB	DRY BULB
	DET.	DETAIL
	DIM.	DIMENSIONS
	DN.	DOWN
	DWG(S).	DRAWING(S)

LEGEND (CONT.)

SYMBOL	ABBREV.	DESCRIPTION
	DX	DIRECT EXPANSION
	(E)	EXISTING
	EAT	ENTERING AIR TEMPERATURE
	EDB.	ENTERING DRY BULB
	ENT.	ENTERING
	EQ.	EQUAL
	EWT	ENTERING WATER TEMPERATURE
	EER	ENERGY EFFICIENCY RATIO
	E.E.S.	ENERGY EFFICIENCY STANDARDS
	EFF.	EFFICIENCY
	ELEC.	ELECTRICAL
	ESP	EXTERNAL STATIC PRESSURE (INCHES OF WATER)
	FAB	FABRICATED
	F.A.R.	FREE AREA REQUIRED
	FLA	FULL LOAD AMPS
	FPM	FEET PER MINUTE
	FT.	FEET
	GA.	GAUGE
	GALV.	GALVANIZED
	GPM	GALLONS PER MINUTE
	GSM	GALVANIZED SHEET METAL
	HERS	HOME ENERGY RATING SYSTEM
	HHW	HEATING HOT WATER
	HP	HORSEPOWER
	HSPF	HEATING SEASONAL PERFORMANCE FACTOR
	HVAC	HEATING, VENTILATION AND AIR CONDITIONING
	I.B.C.	INTERNATIONAL BUILDING CODE
	I.M.C.	INTERNATIONAL MECHANICAL CODE
	I.P.C.	INTERNATIONAL PLUMBING CODE
	IN.	INCHES
	IPLV	INTEGRATED PART–LOAD VALUE
	KW	KILOWATT
	LAT	LEAVING AIR TEMPERATURE
	LBS.	POUNDS
	LVG.	LEAVING
	LWT	LEAVING WATER TEMPERATURE
	MECH.	MECHANICAL
	MAX.	MAXIMUM
	MB	MACHINE BOLT
	MBH	1000 BTUH
	MCA	MINIMUM CIRCUIT AMPACITY
	MFR	MANUFACTURER
	MIN.	MINIMUM
	MOCP	MAXIMUM OVERCURRENT PROTECTION
	MTG.	MOUNTING
	MVD	MANUAL VOLUME DAMPER
	NA	NOT APPLICABLE
	N.F.P.A.	NATIONAL FIRE PROTECTION ASSOCIATION
	NIC	NOT IN CONTRACT
	NC	NOISE CRITERIA
	NO.	NUMBER
	OBD	OPPOSED BLADE DAMPER
	OPER.	OPERATING
	OSHPD	OFFICE OF STATEWIDE HEALTH PLANNING AND DEVELOPMENT
	PH	PHASE
	QTY.	QUANTITY
	RECT.	RECTANGLE/RECTANGULAR
	RPM	REVOLUTIONS PER MINUTE
	SEER	SEASONAL ENERGY EFFICIENCY RATIO
	SF	SQUARE FEET
	SQ.	SQUARE
	SMACNA	SHEET METAL AND AIR CONDITIONING CONTRACTORS' NATIONAL ASSOCIATION
	S.M.S.	SHEET METAL SCREW
	S.O.V.	SHUT–OFF VALVE
	SPD	STATIC PRESSURE DROP
	SQFT	SQUARE FEET
	STRUC.	STRUCTURAL
	STL.	STEEL
	TEMP.	TEMPERATURE
	THRU	THROUGH
	TSP	TOTAL STATIC PRESSURE
	TYP.	TYPICAL
	U/C	UNDERCUT DOOR
	U.L.	UNDERWRITER'S LABORATORIES
	U.F.C.	UNIFIED FACILITIES CRITERIA
	V	VOLTAGE/VOLTS
	VEL.	VELOCITY
	VAV	VARIABLE AIR VOLUME
	VFD	VARIABLE FREQUENCY DRIVE
	WB	WET BULB
	WT.	WEIGHT

MANDATORY HVAC SYSTEM MEASURES

1. ALL WORK INDICATED ON DRAWINGS AND/OR SPECIFICATIONS SHALL BE COORDINATED WITH WORKS OF OTHER TRADES PRIOR TO START OF WORK.
2. ALL HVAC EQUIPMENT LISTED IN SECTION 100(H) OF THE E.E.S. MUST BE C.E.C. CERTIFIED.
3. ALL PIPING INSULATION SHALL BE CONSISTENT WITH THE REQUIREMENTS OF C.M.C. SECTIONS 1201.2 AND TABLE E 502.5, AND E.E.S. SECTION 120.3–A.
4. ALL DUCTWORK INSULATION SHALL BE CONSISTENT WITH THE REQUIREMENTS OF SECTIONS C.M.C. SECTION 604.0 TITLE 24 E.E.S. TABLE 150.1–A.
5. ALL HVAC EQUIPMENT AND APPLIANCE SHALL MEET THE REQUIREMENTS PER SECTIONS 110.1–110.2, 110.5 AND 120.1–120.7 E.E.S.
6. ALL HVAC SYSTEMS SHALL MEET THE CONTROL REQUIREMENTS PER SECTION 110.2 AND 120.2 E.E.S.
7. ALL VENTILATION SYSTEMS SHALL BE CONSTRUCTED AND INSTALLED IN ACCORDANCE WITH THE C.M.C.
8. THE CONTRACTOR SHALL PROVIDE THE BUILDING OWNER, MANAGER, AND THE ORIGINAL OCCUPANTS A LIST OF THE HEATING, VENTILATION, AND AIR CONDITIONING FEATURES, MATERIALS, AND COMPONENTS INSTALLED IN THE BUILDING AND OPERATING INSTRUCTIONS.
9. INSULATION MATERIAL SHALL MEET THE CALIFORNIA QUALITY STANDARD PER SECTION 120.3 AND 120.4 E.E.S.
10. ALL SPACE CONDITIONING AND VENTILATION SYSTEMS SHALL BE BALANCED TO THE QUANTITIES SPECIFIED IN THESE PLANS, IN ACCORDANCE WITH THE NATIONAL ENVIRONMENTAL BALANCING BUREAU (NEBB) PROCEDURAL STANDARDS, OR ASSOCIATED AIR BALANCE COUNCIL (AABC) NATIONAL STANDARDS. TESTING AND BALANCING SHALL BE DONE BY AN INDEPENDENT QUALIFIED AGENCY.
11. ALL SYSTEMS SHALL PROVIDE THE MINIMUM OUTSIDE AIR AS SHOWN ON THE MECHANICAL DRAWINGS, AND SHALL BE MEASURED AND CERTIFIED BY AN INDEPENDENT QUALIFIED TESTING AGENCY.
12. DUCT INSULATION SHALL HAVE A MINIMUM INSTALLED R–VALUE OF 8.0.
13. DURING CONSTRUCTION, ENDS OF DUCT OPENINGS SHALL BE SEALED AND MECHANICAL EQUIPMENT SHALL BE COVERED TO PROTECT INTEGRITY OF SYSTEM CLEANLINESS.
14. PRIOR TO FINAL APPROVAL OF THE BUILDING, THE LICENSED CONTRACTOR, ARCHITECT, OR ENGINEER IN RESPONSIBLE CHARGE OF THE OVERALL CONSTRUCTION MUST COMPLETE AND SIGN THE GREEN BUILDING STANDARDS CERTIFICATION FORM AND GIVE TO THE BUILDING DEPARTMENT OFFICIAL TO BE FILED WITH THE APPROVED PLANS.
15. PROVIDE TEMPORARY MEANS OF BUILDING VENTILATION DURING CONSTRUCTION IN ACCORDANCE WITH CGBSC SECTION 5.504.1.1.
16. BUILDING FLUSH–OUT SHALL BE PERFORMED AND MONITORED UPON CONSTRUCTION COMPLETION IN ACCORDANCE WITH CGBSC SECTION 5.504.2.
17. ALL ENVELOPE AND MECHANICAL CERTIFICATE OF ACCEPTANCE FORMS AND ALL RELATED ACCEPTANCE DOCUMENTS SHALL BE SUBMITTED TO THE FIELD INSPECTOR DURING CONSTRUCTION. CERTIFICATE OF OCCUPANCY WILL NOT BE ISSUED UNTIL THESE FORMS ARE REVIEWED AND APPROVED.
18. FOR PROJECTS OVER 10,000 SQUARE FEET IN FLOOR AREA, UNLESS NOTED OTHERWISE, FUNDAMENTAL BUILDING COMMISSIONING FOR HVAC, LIGHTING AND DOMESTIC HOT WATER SYSTEMS SHALL BE PERFORMED IN ACCORDANCE WITH SPECIFICATION SECTION 23 08 00 AND THE CGBSC SECTION 5.410.2.
19. (FOR RESIDENTIAL ONLY) MECHANICAL EXHAUST FANS DIRECTLY EXHAUSTING BATHROOMS SHALL BE ENERGY STAR COMPLIANT AND CONTROLLED BY SPACE HUMIDISTAT AS PER CALGREEN CODE SECTION 4.506.1.
20. THERMOSTATIC CONTROLS FOR ALL SINGLE ZONE AIR CONDITIONERS AND HEAT PUMPS SHALL COMPLY WITH THE REQUIREMENTS OF EES SECTION 110.2(C) AND REFERENCE JOINT APPENDIX JA5. THERMOSTAT SHALL BE CAPABLE OF COMMUNICATING THROUGH EITHER (1) AT LEAST ONE EXPANSION PORT WITH A REMOVABLE MODULE TO ENABLE COMMUNICATION; OR (2) ON BOARD COMMUNICATION DEVICE.
21. DUCTWORK SHALL BE LEAK TESTED IN ACCORDANCE WITH SMACNA HVAC AIR DUCT LEAKAGE TEST MANUAL FOR A REPRESENTATIVE TOTAL NOT LESS THAN 10% OF INSTALLED DUCTWORK IN ACCORDANCE WITH THE REQUIREMENTS OF CMC 603.10.

VEHICLE EXHAUST SYSTEM NOTES

A. THE GENERAL CONTRACTOR SHALL PROVIDE:
   1. ADEQUATE ACCESS TO THE JOB SITE.
   2. INFORMATION ON CONSTRUCTION SCHEDULING TO FACILITATE PROGRESSIVE INSTALLATION.
   3. ELECTRICAL POWER TO THE VEHICLE EXHAUST CONTROL PANEL. (208V/3)
   4. ELECTRICAL POWER/CONTROL WIRING FROM THE VEHICLE EXHAUST CONTROL PANEL TO THE EXHAUST FAN.
   5. COMPRESSED AIR SOURCE WITH A MINIMUM OF 85 PSI FOR SYSTEM OPERATION.
   6. (4) FOUR OPEN ENDED 1/4'' AIR LINES FROM THE STATION AIR SOURCE TO A POSITION ABOVE THE ENDS OF EACH RAIL.
   7. MOUNTING PROVISIONS FOR THE CONTROL PANEL.
   8. NECESSARY STRUCTURE AND BACKING TO SUPPORT VEHICLE EXHAUST RAILS AND SUPPORT SYSTEM USING A MAXIMUM LEG SPACING OF 10 FEET. (COORDINATE WITH ARCHITECT.)
   9. THE CODE REQUIRED FUSE DISCONNECT AT THE FAN.
   10. LOW VOLTAGE CONDUIT FROM THE CONTROL PANEL OR PANELS TO A POINT ABOVE THE CENTER OF EACH TRACK OR RAIL.
   11. ALL NECESSARY LINE AND LOW VOLTAGE WIRING AND CONDUIT TO CONTROL PANEL AND FROM THE CONTROL PANEL TO THE EXHAUST FAN.
   12. EQUIPMENT PAD FOR MOUNTING THE EXHAUST FAN.
   13. FLASHING FOR ROOF/WALL PENETRATIONS.
   14. TREATING/FINISHING OF ALL FLASHING AND EQUIPMENT ASSOCIATED WITH EXHAUST REMOVAL SYSTEM.

B. THE VEHICLE EXHAUST SUBCONTRACTOR SHALL PROVIDE:
   1. STRAIGHT RAIL SYSTEMS.
   2. RADIAL HIGH STATIC EXHAUST FAN, SIZED FOR ADEQUATE AIR FLOW FOR THE NUMBER OF DROPS, AT THE VOLTAGE AND PHASE FOR THE PARTICULAR STATION. AS REQUIRED.
   3. CONTROL PANELS WHICH HOUSE THE MOTOR STARTER, OVERLOAD RELAYS, TIMER, STEP–DOWN TRANSFORMER. AS REQUIRED.
   4. SENSORS TO ACTIVATE THE EXHAUST FAN UPON VEHICLE START–UP. AS REQUIRED.
   5. COMPLETE SUPPORT STRUCTURE FOR TRACKS OR RAILS.
   6. ALL SYSTEM DUCTWORK (MIN. 22 GAGE GALVANIZED STEEL ALL SIZES), HANGERS, AND GRABBERS.
   7. ALL MISC. FITTINGS, AND AIR DRYER, REGULATOR, ETC. FOR COMPLETE SYSTEM OPERATION.
   8. INSTALLATION OF SECONDARY AIRLINES FOR COMPLETE OPERATION OF GRABBERS.
   9. COMPLETE THE CONNECTION OF LOW VOLTAGE WIRING FROM POINT(S) ABOVE RAILS AS PROVIDED BY THE GENERAL CONTRACTOR TO THE PROVIDED PRESSURE SENSORS.
   10. COMPLETE START–UP OF THE SYSTEM.
   11. TRAINING OF THE FIRE FIGHTING CREWS.
   12. TRAINING VIDEO.

STK ARCHITECTURE, INC.
42095 ZEVO DR., TEMECULA, CALIFORNIA 92590-3780
Phone: 951.296.9110 Fax: 951.296.6079 Email: stk@stkinc.com

CONSULTANT:
SALASO'BRIEN
| expect a difference |
3220 EXECUTIVE RIDGE
SUITE 210
VISTA, CA 92081
TEL: (760) 560-0100
#21189
ED ES SS NP
www.salasobrien.com
E-Mail admin@tsqeng.com

PROJECT ADMINISTERED BY:
SAN BERNARDINO COUNTY
PROJECT & FACILITIES
MANAGEMENT DEPARTMENT

385 N. ARROWHEAD AVE.
SAN BERNARDINO, CA 92415

PROJECT NAME:
SAN BERNARDINO COUNTY FIRE DEPARTMENT:
FIRE STATION 226

PROJECT # 10.10.1032
CIP #21-037
CAFM # SAB198
APN # 0273-011-22

1920 DEL ROSA AVE N.
SAN BERNARDINO,
CA 92404

ISSUE INFORMATION:

DATE:	INFORMATION:
04-11-2022	20% CD SET
04-28-2022	50% CD SET
06-15-2022	95% CD SET
09-16-2022	95% CD- 3rd BAY
10-03-2022	PLAN CHECK

SHEET INFORMATION:
STK PROJECT NO.: 374-154-21
SCALE: AS NOTED
DATE: JANUARY 2021
PLOT DATE: –
DRAWING NAME:

SEAL:
REGISTERED PROFESSIONAL ENGINEER
FARZAD TADAYON
No. M29230
Exp. 3/31/23
MECHANICAL
STATE OF CALIFORNIA

SHEET TITLE:
MECHANICAL LEGEND AND GENERAL NOTES

SHEET NO.:
M0.1

DX COOLING COIL SCHEDULE

TAG	MANUFACTURER & MODEL NO.	CAPACITY (MBH) @ DESIGN COND. TOTAL	SENSIBLE	DESIGN COND. EDB (°F)	EWB (°F)	CFM	S.P. DROP (IN. WC)	OPER. WEIGHT (LBS.)	REMARKS
CC 1	CARRIER CVPVA48	48	36	85	67	1400	0.05	50	1 2 3
CC 2	CARRIER CVPVA48	48	36	85	67	1400	0.05	50	1 2 3
CC 3	CARRIER CVPVA48	48	36	85	67	1400	0.05	50	1 2 3
CC 4	CARRIER CVPVA60	60	48	85	67	1750	0.05	50	1 2 3
CC 5	CARRIER CVPVA48	48	36	85	67	1400	0.05	50	1 2 3

1. SWEAT SUCTION TUBE & LIQUID TUBE CONNECTIONS.
2. COIL LOCATED ON SUPPLY SIDE OF FORCED AIR UNIT. COIL NUMBER CORRESPONDS WITH FURNACE NUMBER.
3. PROVIDE FAN COIL WITH DRAIN PAN AND SECONDARY CONDENSATE DRAIN OVERFLOW CUTOUT SWITCH

AIR DEVICE SCHEDULE

TAG	MANUFACTURER & MODEL NO.	TYPE	FRAME STYLE	OBD (YES/NO)	REMARKS
A	TITUS PMC	PERFORATED SUPPLY	BORDER TYPE 3	NO	1 2 3 4
B	TITUS PAR	PERFORATED RETURN/EXHAUST	BORDER TYPE 3	NO	1 2 4
C	TITUS MCD	MODULAR CORE SUPPLY	BORDER TYPE 1	YES	1 2 3 4
D	TITUS 350RL	LOUVER FACE RETURN/EXHAUST	BORDER TYPE 3	NO	2 4
E	TITUS 300RL	DOUBLE DEFLECTION SUPPLY	BORDER TYPE 3	NO	2 4

1. SQUARE NECK WITH ROUND ADAPTOR.
2. STEEL CONSTRUCTION.
3. MODULAR CORE WITH 4-WAY DEFLECTION, U.N.O.
4. SEE DETAIL 4/M5.1.

CEILING FAN SCHEDULE

TAG	MANUFACTURER & MODEL NO.	SERVES	VELOCITY (RPM)	ELECTRICAL DATA NO.	HP	AMPS	V	PH.	OPER. WEIGHT (LBS.)	REMARKS
F 1	BIG ASS FANS ESSENCE 8-FOOT	APP BAY	158	1	---	10	115	1	75	1 2 3 4 5
F 2	BIG ASS FANS ESSENCE 8-FOOT	APP BAY	158	1	---	10	115	1	75	1 2 3 4 5
F 3	BIG ASS FANS ESSENCE 8-FOOT	APP BAY	158	1	---	10	115	1	75	1 2 3 4 5

1. PROVIDE WITH MANUFACTURER'S INSTALLATION KIT. SEE MANUFACTURER'S INSTALLATION MANUAL FOR MOUNTING DETAILS.
2. INTERLOCK WITH MANUFACTURER'S CONTROLLER.
3. PROVIDE WITH DISCONNECT SWITCH BY ELECTRICAL.
4. PROVIDE ALL CONTROL WIRING IN CONDUIT AND ALL ACCESSORIES REQUIRED BY MANUFACTURER FOR PROPER OPERATION.
5. FIELD VERIFY EXACT ELECTRICAL REQUIREMENTS WITH MANUFACTURER AND COORDINATE WITH ELECTRICAL CONTRACTOR PRIOR TO START OF WORK.

UNIT HEATER SCHEDULE

TAG	MANUFACTURER & MODEL NO.	SERVES	CFM	HEATING INPUT (MBH)	OUTPUT (MBH)	AFUE (%)	FAN HP	TYPE	ELECTRICAL FLA	V	PH	OPER. WEIGHT (LBS.)	REMARKS
UH 1	REZNOR UBZ-100	APP BAY	1700	105	87.15	83	3/4	DIRECT	13.2	115	1	200	1 2 3 4
UH 2	REZNOR UBZ-100	APP BAY	1700	105	87.15	83	3/4	DIRECT	13.2	115	1	200	1 2 3 4

1. PROVIDE STAINLESS STEEL HEAT EXCHANGER AND SINGLE STAGE GAS VALVE.
2. CONTROL BY THERMOSTAT, SEE DETAIL 5/M5.2. MOUNT THERMOSTAT PER DETAIL 1/M5.1.
3. PROVIDE CONCENTRIC VENT KIT. INSTALL PER MANUFACTURER'S INSTRUCTIONS AND DETAIL 3/M5.2.
4. PROVIDE MOUNTING HARDWARE. SUPPORT PER DETAIL 6/M5.2.

CONDENSING UNIT (COOLING ONLY) SCHEDULE

TAG	MANUFACTURER & MODEL NO.	SERVES	COOLING NET CAPACITY TOTAL (MBH)	SENSIBLE (MBH)	AMB. (°F)	SEER (EER)	ELECTRICAL COMPRESSOR NO.	RLA	LRA	CONDENSER FAN NO.	HP	FLA	UNIT POWER SUPPLY MCA	MOCP	V	PH	OPER. WEIGHT (LBS.)	REMARKS
CU 1	CARRIER 24ANB148-31	DORMS	48	36	90	18	1	21.2	104	1	1/5	2.7	29.2	40	208	1	360	1 2 3 4 5 6 7
CU 2	CARRIER 24ANB148-31	DORMS	48	36	90	18	1	21.2	104	1	1/5	2.7	29.2	40	208	1	360	1 2 3 4 5 6 7
CU 3	CARRIER 24ANB148-31	GYM	48	36	90	18	1	21.2	104	1	1/5	2.7	29.2	40	208	1	360	1 2 3 4 5 6 7
CU 4	CARRIER 24ANB160-31	KITCHEN/ LIVING	60	48	90	16.7	1	28.8	153	1	1/5	2.7	38.7	60	208	1	360	1 2 3 4 5 6 7
CU 5	CARRIER 24ANB148-31	FRONT OFFICE	48	36	90	18	1	21.2	104	1	1/5	2.7	29.2	40	208	1	360	1 2 3 4 5 6 7

1. PROVIDE REFRIGERANT PIPING AND INSULATION INCLUDING FULL REFRIGERANT CHARGE. SIZE SHALL BE AS PER MFR.'S REQUIREMENT AND FINAL DEVELOPED LENGTH. PROVIDE ALL REFRIGERANT ACCESSORIES AS PER MFR.'S RECOMMENDATION. VERIFY SIZING WITH MFR.'S REP. PRIOR TO INSTALLATION, SEE DETAILS 5/M5.1 AND 6/M5.1.
2. PROVIDE WITH CRANKCASE HEATER AND LIQUID LINE SOLENOID VALVE FOR LONG LINE APPLICATIONS.
3. PROVIDE WITH EVAPORATOR FREEZE THERMOSTAT, ISOLATION RELAY, LOW-AMBIENT CONTROL KIT AND WINTER START CONTROL KIT FOR LOW-AMBIENT COOLING APPLICATIONS.
4. PROVIDE WITH VIBREX VIBRATION ISOLATION TYPE RC 2"x2" NEOPRENE PADS. MOUNT ON LEVEL PLATFORM, SEE DETAIL 8/M5.1.
5. PROVIDE WITH FUSED DISCONNECT. FOR CONTROL DIAGRAM, SEE DETAIL 11/M5.1.
6. PROVIDE ALL CONTROL WIRING INSIDE CONDUIT AND ALL OTHER ACCESSORIES FOR PROPER OPERATION REQUIRED BY MANUFACTURER.
7. FIELD VERIFY EXACT ELECTRICAL REQUIREMENTS WITH MANUFACTURER AND COORDINATE WITH ELECTRICAL CONTRACTOR PRIOR TO START OF WORK.

GAS FURNACE SCHEDULE

TAG	MANUFACTURER & MODEL NO.	SERVES	CFM	ESP (IN. WG.)	MIN. OA CFM	INPUT (MBH)	AFUE (%)	ELECTRICAL SUPPLY FAN NO.	HP	FLA	UNIT POWER SUPPLY MCA	MOCP	V	PH.	FILTERS QTY	SIZE	OPER. WEIGHT (LBS.)	REMARKS
FAU 1	CARRIER 59SP5A 100-16	DORMS	1400	0.6	200	100	96.5	1	1	12.2	16.1	20	115	1	1	21x20x2	170	1 2 3 4 5 6 7 8 9 10 11 12
FAU 2	CARRIER 59SP5A 100-16	DORMS	1500	0.6	200	100	96.5	1	1	12.2	16.1	20	115	1	1	21x20x2	170	1 2 3 4 5 6 7 8 9 10 11 12
FAU 3	CARRIER 59SP5A 100-16	GYM	1400	0.6	200	100	96.5	1	1	12.2	16.1	20	115	1	1	21x20x2	170	1 2 3 4 5 6 7 8 9 10 11 12
FAU 4	CARRIER 59SP5A 120-22	COMMON	1750	0.6	200	120	96.5	1	1	12.2	16.1	20	115	1	1	25x24x2	190	1 2 3 4 5 6 7 8 9 10 11 12
FAU 5	CARRIER 59SP5A 100-16	FRONT/ADMIN	1400	0.6	200	100	96.5	1	1	12.2	16.1	20	115	1	1	21x20x2	170	1 2 3 4 5 6 7 8 9 10 11 12

1. FOR FURNACE MOUNTING, SEE DETAIL 7/M5.1.
2. PROVIDE WITH DUCT MOUNTED SMOKE DETECTOR. SEE FLOOR PLAN FOR LOCATION. SEE ELECTRICAL PLAN FOR POWER REQUIREMENTS.
3. PROVIDE UV EMITTERS. 80 WATT/120V/1PH.
4. PROVIDE DOOR SWITCH.
5. PROVIDE NATURAL GAS BURNER.
6. PROVIDE PVC FURNACE FLUE PIPES WITH CONCENTRIC VENT TERMINATION KIT. SIZE SHALL BE BASED ON THE FINAL DEVELOPED LENGTH AND MANUFACTURER'S RECOMMENDATIONS, SEE DETAIL 3/M5.2.
7. PROVIDE WITH PROGRAMMABLE THERMOSTAT, SEE DETAIL 1/M5.1.
8. PROVIDE UL 900 (CLASS 1 OR 2) (MERV-13) PLEATED FILTER.
9. PROVIDE WITH STAINLESS STEEL DRAIN PAN.
10. PROVIDE WITH FUSED DISCONNECT. FOR CONTROL DIAGRAM, SEE DETAIL 11/M5.1.
11. PROVIDE ALL CONTROL WIRING INSIDE CONDUIT AND ALL OTHER ACCESSORIES FOR PROPER OPERATION REQUIRED BY MANUFACTURER.
12. FIELD VERIFY EXACT ELECTRICAL REQUIREMENTS WITH MANUFACTURER AND COORDINATE WITH ELECTRICAL CONTRACTOR PRIOR TO START OF WORK.

EXHAUST FAN SCHEDULE

TAG	MANUFACTURER & MODEL NO.	SERVES	CFM	ESP (IN. W.G.)	DRIVE TYPE	RPM	BHP (WATTS)	HP (WATTS)	MAX. SONES	V	PH	FAN TYPE	OPER. WEIGHT (LBS.)	REMARKS
EF 1	PLYMOVENT TEV-585-60	PLYMOVENT	2840	6.0	BELT	3480	–	7.5	–	208	3	UTILITY SET	175	1 2 11 12
EF 2	COOK GC-622	ELEC	350	0.25	DIRECT	1137	–	(107)	2.0	115	1	CEILING MOUNT	35	3 4 5 7 8 9 10
EF 3	COOK GC-168	JAN	150	0.25	DIRECT	1093	–	(53)	3.0	115	1	CEILING MOUNT	21	3 4 5 6 8 9 10
EF 4	COOK GC-342	RESTROOM	200	0.25	DIRECT	1620	–	(70)	3.5	115	1	CEILING MOUNT	32	3 4 5 6 8 9 10
EF 5	COOK GC-342	LAUNDRY	200	0.25	DIRECT	1620	–	(70)	3.5	115	1	CEILING MOUNT	32	3 4 5 6 8 9 10
EF 6	COOK GC-342	RESTROOM	200	0.25	DIRECT	1620	–	(70)	3.5	115	1	CEILING MOUNT	32	3 4 5 6 8 9 10
EF 7	COOK GC-622	TEL	350	0.25	DIRECT	1137	–	(107)	2.0	115	1	CEILING MOUNT	35	3 4 5 7 8 9 10
EF 8	COOK GC-342	RESTROOM	200	0.25	DIRECT	1620	–	(70)	3.5	115	1	CEILING MOUNT	32	3 4 5 6 8 9 10
EF 9	COOK GC-342	RESTROOM	200	0.25	DIRECT	1620	–	(70)	3.5	115	1	CEILING MOUNT	32	3 4 5 6 8 9 10
EF 10	COOK GC-342	RESTROOM	200	0.25	DIRECT	1620	–	(70)	3.5	115	1	CEILING MOUNT	32	3 4 5 6 8 9 10

1. PROVIDE WITH SPRING TYPE VIBRATION ISOLATION HARDWARE, SILENCER, FLEXIBLE CONNECTIONS, MOTOR GUARD AND BACKDRAFT RAIN CAP.
2. PROVIDE WITH BACKDRAFT DAMPER.
3. PROVIDE WITH INTEGRAL BACKDRAFT DAMPER AND CEILING GRILLE.
4. PROVIDE ALL MOUNTING HARDWARE INCLUDING SEISMIC BRACING, SEE DETAIL 9/M5.1.
5. PROVIDE THERMAL OVERLOAD PROTECTION ON FAN MOTOR.
6. INTERLOCK WITH WALL SWITCH, SEE DETAIL 12/M5.1. SEE FLOOR PLANS FOR THERMOSTAT LOCATION.
7. INTERLOCK WITH THERMOSTAT, SEE DETAIL 12/M5.1. SEE FLOOR PLANS FOR LOCATION.
8. PROVIDE WITH DISCONNECT SWITCH, BY OTHERS.
9. PROVIDE ALL CONTROL WIRING IN CONDUIT AND ALL ACCESSORIES REQUIRED BY MANUFACTURER FOR A COMPLETE AND OPERATIONAL SYSTEM.
10. FIELD VERIFY EXACT ELECTRICAL REQUIREMENTS WITH MANUFACTURER AND COORDINATE WITH ELECTRICAL CONTRACTOR PRIOR TO START OF WORK.
11. PROVIDE WITH CONTROL PANEL (PLYMOVENT MODEL #OS-3). FAN IS RADIAL, CAST ALMAG WHEEL, CAST ALUMINUM HOUSING WITH FLEXIBLE CONNECTIONS AND FAN SILENCER. ENTIRE FAN ASSEMBLY SHALL BE INSTALLED INDOORS.
12. MECHANICAL CONTRACTOR SHALL PROVIDE FUSED DISCONNECT AND MOTOR STARTED (COORDINATE WITH EXHAUST REMOVAL SYSTEM SUPPLIER), SEE DETAIL 10/M5.1 FOR CONTROL.

SUPPLY FAN SCHEDULE

TAG	MANUFACTURER & MODEL NO.	SERVES	CFM	ESP (IN. W.G.)	DRIVE TYPE	RPM	BHP (WATTS)	HP (WATTS)	MAX. SONES	V	PH	FAN TYPE	OPER. WEIGHT (LBS.)	REMARKS
S 1	COOK GN-622	TURN AROUND	350	0.25	DIRECT	1137	–	(107)	2.0	115	1	INLINE	35	1 2 3 4 5 6 7

1. PROVIDE WITH BACKDRAFT DAMPER.
2. PROVIDE ALL MOUNTING HARDWARE INCLUDING SEISMIC BRACING, SEE DETAIL 9/M5.1.
3. PROVIDE THERMAL OVERLOAD PROTECTION ON FAN MOTOR.
4. INTERLOCK WITH WALL SWITCH, SEE DETAIL 12/M5.1. SEE FLOOR PLANS FOR THERMOSTAT LOCATION.
5. PROVIDE WITH DISCONNECT SWITCH, BY OTHERS.
6. PROVIDE ALL CONTROL WIRING IN CONDUIT AND ALL ACCESSORIES REQUIRED BY MANUFACTURER FOR A COMPLETE AND OPERATIONAL SYSTEM.
7. FIELD VERIFY EXACT ELECTRICAL REQUIREMENTS WITH MANUFACTURER AND COORDINATE WITH ELECTRICAL CONTRACTOR PRIOR TO START OF WORK.

NOT FOR BID

STK
42095 ZEVO DR., TEMECULA, CALIFORNIA 92590-3780
Phone: 951.296.9110 Fax: 951.296.6079 Email: stk@stkinc.com

CONSULTANT:
SALASO'BRIEN
[expect a difference]
3220 EXECUTIVE RIDGE
SUITE 210
VISTA, CA 92081
TEL: (760) 560-0100
#21189
ED | ES | SS | NP
www.salasobrien.com
E-Mail admin@tsqeng.com

PROJECT ADMINISTERED BY:
SAN BERNARDINO COUNTY
PROJECT & FACILITIES
MANAGEMENT DEPARTMENT

385 N. ARROWHEAD AVE.
SAN BERNARDINO, CA 92415

PROJECT NAME:
SAN BERNARDINO COUNTY FIRE DEPARTMENT:
FIRE STATION 226

PROJECT # 10.10.10.032
CIP #21-037
CAFM # SAB198
APN # 0273-011-22

1920 DEL ROSA AVE N.
SAN BERNARDINO,
CA 92404

ISSUE INFORMATION:

DATE:	INFORMATION:
04-11-2022	20% CD SET
04-28-2022	50% CD SET
06-15-2022	95% CD SET
09-16-2022	95% CD- 3rd BAY
10-03-2022	PLAN CHECK

SHEET INFORMATION:
STK PROJECT NO.: 374-154-21
SCALE: AS NOTED
DATE: JANUARY 2021
PLOT DATE: –
DRAWING NAME:

SEAL:
REGISTERED PROFESSIONAL ENGINEER
No. M29230
Exp. 3/31/23
MECHANICAL
STATE OF CALIFORNIA

SHEET TITLE:
MECHANICAL SCHEDULES

SHEET NO.:
M0.2

Project Name:	San Bernardino FS	NRCC-PRF-01-E	Page 1 of 10
Project Address:	1920 Del Rosa Ave. N. San Bernardino 92404	Calculation Date/Time:	16:45, Mon, Jun 13, 2022
Input File Name:	SBFS T-24.cibd19x		

A. GENERAL INFORMATION

1	Project Location (city)	San Bernardino	8	Standards Version	Compliance2019
2	CA Zip Code	92404	9	Compliance Software (version)	EnergyPro 8.2
3	Climate Zone	10	10	Weather File	RIVERSIDE_722869_CZ2010.epw
4	Total Conditioned Floor Area in Scope	4,641 ft²	11	Building Orientation (deg)	(N) 0 deg
5	Total Unconditioned Floor Area	0 ft²	12	Permitted Scope of Work	NewEnvelopeAndMechanical
6	Total # of Stories (Habitable Above Grade)	1	13	Building Type(s)	Nonresidential
7	Total # of dwelling units	0	14	Gas Type	NaturalGas

B. PROJECT SUMMARY

Table Instructions: Table B shows which building components are included in the performance calculation. If indicated as not included, the project must show compliance prescriptively if within permit application.

Building Components Complying via Performance					Building Components Complying Prescriptively	
Envelope (see Table G)	☒ Performance ☐ Not Included	Covered Process: Commercial Kitchens	☐ Performance ☒ Not Included	*The following building components are ONLY eligible for prescriptive compliance and should be documented on the NRCC form listed if within the scope of the permit application (i.e. compliance will not be shown on the NRCC-PRF-E).*		
Mechanical (see Table H)	☒ Performance ☐ Not Included	Covered Process: Computer Rooms	☐ Performance ☒ Not Included	Indoor Lighting (Unconditioned)§140.6	*NRCC-LTI-E*	
				Outdoor Lighting §140.7	*NRCC-LTO-E*	
Domestic Hot Water (see Table I)	☐ Performance ☒ Not Included	Covered Process: Laboratory Exhaust	☐ Performance ☒ Not Included	Sign Lighting §140.8	*NRCC -LTS-E*	
				Mandatory Measures		
Lighting (Indoor Conditioned, see Table K)	☐ Performance			*Electrical power systems, commissioning, solar ready, elevator and escalator requirements are mandatory and should on the NRCC form listed if applicable (i.e. compliance will not be shown on the NRCC-PRF-E.)*		
	☒ Not Included			Electrical Power Distribution S110.11	*NRCC-ELC-E*	
Solar Thermal Water Heating (see Table I)	☐ Performance			Commissioning S120.8	*NRCC-CXR-E*	
	☒ Not Included			Solar Ready S110.10	*NRCC-SRA-E*	

Project Name:	San Bernardino FS	NRCC-PRF-01-E	Page 2 of 10
Project Address:	1920 Del Rosa Ave. N. San Bernardino 92404	Calculation Date/Time:	16:45, Mon, Jun 13, 2022
Input File Name:	SBFS T-24.cibd19x		

C1. COMPLIANCE RESULTS FOR PERFORMANCE COMPONENTS (Annual TDV Energy Use, kBtu/ft ²-yr)

COMPLIES

Energy Component	Standard Design (TDV)	Proposed Design (TDV)	Compliance Margin (TDV)[1]
Space Heating	2.04	3.66	-1.62
Space Cooling	84.26	77.34	6.92
Indoor Fans	95.58	38.81	56.77
Heat Rejection	--	--	--
Pumps & Misc.	--	--	--
Domestic Hot Water	8.42	8.42	--
Indoor Lighting	39.55	39.55	--
ENERGY STANDARDS COMPLIANCE TOTAL	**229.85**	**167.78**	**62.07 (27.0%)**

[1] *Notes: The number in parenthesis following the Compliance Margin in column 4. represents the Percent Better than Standard.*

C2. RESULTS FOR 'ABOVE CODE' QUALIFICATIONS[1]

☐ This project is pursuing CalGreen Tier 1 ☐ This project is pursuing CalGreen Tier 2

Miscellaneous Energy Component	Standard Design (TDV)	Proposed Design (TDV)	Compliance Margin (TDV)[1]
Receptacle	125.67	125.67	--
Process	--	--	--
Other Ltg	--	--	--
Process Motors	--	--	--
COMPLIANCE TOTAL PLUS MISCELLANEOUS COMPONENTS	**355.52**	**293.45**	**62.1 (17.5%)**

[1] *Notes: This table is used to document compliance with programs OTHER THAN Title 24 Part 6, if applicable.*

Project Name:	San Bernardino FS	NRCC-PRF-01-E	Page 3 of 10
Project Address:	1920 Del Rosa Ave. N. San Bernardino 92404	Calculation Date/Time:	16:45, Mon, Jun 13, 2022
Input File Name:	SBFS T-24.cibd19x		

C3. ENERGY USE SUMMARY

Energy Component	Standard Design Site (MWh)	Proposed Design Site (MWh)	Margin (MWh)	Standard Design Site (MBtu)	Proposed Design Site (MBtu)	Margin (MBtu)
Space Heating	--	--	--	4.6	8.5	-3.9
Space Cooling	9.9	8.9	1.0	--	--	--
Indoor Fans	15.1	6.1	9.0	--	--	--
Heat Rejection	--	--	--	--	--	--
Pumps & Misc.	--	--	--	--	--	--
Domestic Hot Water	1.4	1.4	0.0	--	--	--
Indoor Lighting	6.3	6.3	0.0	--	--	--
Compliance Total	**32.7**	**22.7**	**10.0**	**4.6**	**8.5**	**-3.9**
Receptacle	19.9	19.9	0.0	--	--	--
Process	--	--	--	--	--	--
Other Ltg	--	--	--	--	--	--
Process Motors	--	--	--	--	--	--
TOTAL	**52.6**	**42.6**	**10.0**	**4.6**	**8.5**	**-3.9**

D. EXCEPTIONAL CONDITIONS

This project includes partial performance compliance scope options. The building must show compliance with all other applicable compliance scope options (performance or prescriptively) before occupying.

The building does not include service water heating. Verify that service water heating is not required and is not included in the design.

This project uses the Simplified Geometry Performance Modeling Approach which is not capable of modeling daylighting controls and assumes the prescriptive Secondary Daylit Control requirements are met. PRESCRIPTIVE COMPLIANCE documentation (form NRCC-LTI-02-E) for the requirements of section 140.6(d) Automatic Daylighting Controls in Secondary Daylit Zones is required.

E. HERS VERIFICATION

This Section Does Not Apply

Project Name:	San Bernardino FS	NRCC-PRF-01-E	Page 4 of 10
Project Address:	1920 Del Rosa Ave. N. San Bernardino 92404	Calculation Date/Time:	16:45, Mon, Jun 13, 2022
Input File Name:	SBFS T-24.cibd19x		

G1. ENVELOPE GENERAL INFORMATION (conditioned spaces only)

1	2	3	4
Opaque Surfaces & Orientation	**Total Gross Surface Area (ft²)**	**Total Fenestration Area (ft²)**	**Window to Wall Ratio (%)**
North-Facing[1]	80 ft²	0 ft²	00.0%
East-Facing[2]	800 ft²	128 ft²	16.0%
South-Facing[3]	800 ft²	64 ft²	08.0%
West-Facing[4]	800 ft²	128 ft²	16.0%
Total	**2,480 ft²**	**320 ft²**	**12.9%**
Roof	4,641 ft²	0 ft²	00.0%

Notes:
[1] North-Facing is oriented to within 45 degrees of true north, including 45°00'00" east of north (NE), but excluding 45°00'00" west of north (NW).
[2] East-Facing is oriented to within 45 degrees of true east, including 45°00'00" south of east (SE), but excluding 45°00'00" north of east (NE).
[3] South-Facing is oriented to within 45 degrees of true south, including 45°00'00" west of south (SW), but excluding 45°00'00" east of south (SE).
[4] West-Facing is oriented to within 45 degrees of true west, including 45°00'00" north of due west (NW), but excluding 45°00'00" south of west (SW).

G3. OPAQUE SURFACE ASSEMBLY SUMMARY

1	2	3	4	5	6	7	8	9	10
Surface Name	**Surface Type**	**Area (ft²)**	**Framing Type**	**Cavity R-Value**	**Continuous R-Value**	**Units**	**Value**	**Description of Assembly Layers**	**Status[1]**
Slab On Grade6	UndergroundFloor	4641	NA	0	NA	F-Factor	0.73	Slab Type = UnheatedSlabOnGrade Insulation Orientation = None Insulation R-Value = R0	N
R-30 Roof No Attic8	Roof	4641	Wood	30	NA	U-Factor	0.034	Asphalt shingles - 1/4 in. Vapor permeable felt - 1/8 in. Plywood - 1/2 in. Air - Cavity - Wall Roof Ceiling - 4 in. or more Wood framed roof, 16in. OC, 11.25in., R-30 Gypsum Board - 1/2 in.	N

Project Name:	San Bernardino FS	NRCC-PRF-01-E	Page 5 of 10
Project Address:	1920 Del Rosa Ave. N. San Bernardino 92404	Calculation Date/Time:	16:45, Mon, Jun 13, 2022
Input File Name:	SBFS T-24.cibd19x		

G3. OPAQUE SURFACE ASSEMBLY SUMMARY

1	2	3	4	5	6	7	8	9	10
Surface Name	**Surface Type**	**Area (ft²)**	**Framing Type**	**Cavity R-Value**	**Continuous R-Value**	**Units**	**Value**	**Description of Assembly Layers**	**Status[1]**
R-19 Wall10	ExteriorWall	2480	Wood	19	NA	U-Factor	0.072	Stucco - 7/8 in. Vapor permeable felt - 1/8 in. Wood framed wall, 16in. OC, S.Sin., R-19 Gypsum Board - 1/2 in.	N

[1] *Status: N - New, A – Altered, E – Existing*

G5. FENESTRATION ASSEMBLY SUMMARY

1	2	3	4	5	6	7	8	9
Fenestration Assembly Name / Tag or I.D.	**Fenestration Type / Product Type / Frame Type**	**Certification Method[1]**	**Assembly Method**	**Area ft²**	**Overall U-factor**	**Overall SHGC**	**Overall VT**	**Status[2]**
Double Metal Tinted	VerticalFenestration FixedWindow MetalFraming	Default Performance	SiteBuilt	320	0.71	0.60	0.77	N

[1] *Newly installed fenestration shall have a certified NFRC Label Certificate or use the CEC default tables found in Table 110.6-A and Table 110.6-B. Center of Glass (COG) values are for the glass-only, determined by the manufacturer, and are shown for ease of verification. Site-built fenestration values are calculated per Nonresidential Appendix NA6 and are used in the analysis.*
[2] *Status: N - New, A – Altered, E – Existing*

H1. DRY SYSTEM EQUIPMENT (furnaces, air handling units, heat pumps, VRF, economizers etc.)

1	2	3	4	5	6	7	8	9	10	11	12
			Heating				Cooling				
Equipment Name	**Equipment Type**	**Qty**	**Total Heating Output (kBtu/h)**	**Supp Heat Output (kBtuh)**	**Efficiency Unit**	**Efficiency**	**Total Cooling Output (kBtu/h)**	**Efficiency Unit**	**Efficiency**	**Economizer Type (if present)**	**Status[2]**
FAUs	SZAC (Split3Phase)	5	80	0	AFUE	94.0	46	SEER EER	15.00 12.50	NoEconomizer	N

[2] *Status: N - New, A – Altered, E – Existing*

Project Name:	San Bernardino FS	NRCC-PRF-01-E	Page 6 of 10
Project Address:	1920 Del Rosa Ave. N. San Bernardino 92404	Calculation Date/Time:	16:45, Mon, Jun 13, 2022
Input File Name:	SBFS T-24.cibd19x		

H2. FAN SYSTEMS SUMMARY[1]

1	2	3	4	5	6	7	8	9	10	11	12	13
	System Type	Design OA	Supply Fan				Return Fan					
Name or Item Tag	**packaged, DOAS, etc.**	**CFM**	**CFM**	**BHP**	**Watts**	**Control**	**CFM**	**BHP**	**Watts**	**Control**	**Economizer Type (if present)**	**Status[2]**
FAUs	SZAC	139	1600	0.250	218.0	ConstantVolume	NA	NA	NA	NA	NoEconomizer	N

[1] *Status: N - New, A – Altered, E – Existing*

H3. EXHAUST FAN SUMMARY

This Section Does Not Apply

H4. Wet System Equipment(boilers,chillers,cooling towers,etc.)

This Section Does Not Apply

H5. SYSTEM SPECIAL FEATURES

1	2	3	4	5	6
System Name	**Optimum Start**	**Window Interlocks per §140.4(n)**	**Evaporative Cooling**	**Heat Recovery**	**Other Controls**
FAUs	No Optimum Start	NA	No Evaporative Cooler	No Heat Recovery	No DCV Controls, No DDC No Economizer No Supply Air Temp. Control

Notes: This table includes controls related to the performance path only. For projects using the prescriptive path, mandatory and prescriptive controls requirements are documented on the NRCC-MCH-E.

H6. MECHANICAL VENTILATION

1	2	3	4	5	6	7	8	9
	Mechanical Ventilation							
Zone Name	**Ventilation Function**	**# hotel rooms**	**# of people**	**# of bedrooms**	**Supply OA CFM**	**Exhaust CFM**	**Conditioned Area (sf)**	**DCV or Occupant Sensor Controls, or Both**
1-Fire Station	Office - Office space	0	23.20	0	696	0	4641	NA

Multifamily or Hotel/Motel Occupancy? (if "Yes", see DOMESTIC/SERVICE HOT WATER SYSTEM SUMMARY)	No

Project Name:	San Bernardino FS	NRCC-PRF-01-E	Page 7 of 10
Project Address:	1920 Del Rosa Ave. N. San Bernardino 92404	Calculation Date/Time:	16:45, Mon, Jun 13, 2022
Input File Name:	SBFS T-24.cibd19x		

Does the Project include Zonal Systems?	No

H7. ZONAL SYSTEM AND TERMINAL UNIT SUMMARY

1	2	3	4	5	6	7	8	9	10	11	12
			Rated Capacity (kBtuh)		Airflow (cfm)			Fan			
System ID	**Zone Name**	**System Type**	**Heating**	**Cooling**	**Design**	**Min.**	**Min. Ratio**	**BHP**	**Watts**	**Cycles**	**ECM Motor**
1-Fire Station-Trm	1-Fire Station	Uncontrolled	NA	NA	8000	NA	0.00	NA	NA	NA	☐

H8. EVAPORATIVE COOLER SUMMARY

This Section Does Not Apply

Project Name:	San Bernardino FS	NRCC-PRF-01-E	Page 8 of 10
Project Address:	1920 Del Rosa Ave. N. San Bernardino 92404	Calculation Date/Time:	16:45, Mon, Jun 13, 2022
Input File Name:	SBFS T-24.cibd19x		

I. DECLARATION OF REQUIRED CERTIFICATES OF INSTALLATION

Table Instructions: Selections shall be made by Documentation Author to indicate which Certificates of Installation must be submitted for the features to be recognized for compliance. These documents must be retained and provided to the building inspector during construction and can be found online at: https://www.energy.ca.gov/title24/2019standards/2019_compliance_documents/Nonresidential_Documents/NRCI/

Building Component	Form/Title
Envelope	NRCI-ENV-01-E - Must be submitted for all buildings
Mechanical	NRCI-MCH-01-E - Must be submitted for all buildings

Project Name:	San Bernardino FS	NRCC-PRF-01-E	Page 9 of 10
Project Address:	1920 Del Rosa Ave. N. San Bernardino 92404	Calculation Date/Time:	16:45, Mon, Jun 13, 2022
Input File Name:	SBFS T-24.cibd19x		

M. DECLARATION OF REQUIRED CERTIFICATES OF ACCEPTANCE

Table Instructions: Selections shall be made by Documentation Author to indicate which Certificates of Acceptance must be submitted for the features to be recognized for compliance. These documents must be provided to the building inspector during construction and must be completed through an Acceptance Test Technician Certification Provider (ATTCP). For more information visit:https://www.energy.ca.gov/title24/2019standards/2019_compliance_documents/Nonresidential_Documents/NRCA/

Building Component	Form/Title
Envelope	NRCA-ENV-02-F - NRFC label verification for fenestration
Mechanical	NRCA-MCH-02-A Outdoor Air must be submitted for all newly installed HVAC units. Note: MCH02-A can be performed in conjunction with MCH-07-A Supply Fan VFD Acceptance (if applicable) since testing activities overlap
	NRCA-MCH-03-A Constant Volume Single Zone HVAC
	NRCA-MCH-20 Multifamily Ventilation

NOT FOR BID

STK
42065 ZEVO DR., TEMECULA, CALIFORNIA 92590-3780
Phone: 951.296.9110 Fax: 951.296.6079 Email: stk@stknc.com

CONSULTANT:

SALASO'BRIEN
[expect a difference]
3220 EXECUTIVE RIDGE
SUITE 210
VISTA, CA 92081
TEL: (760) 560-0100
#21189
ED ES SS NP
www.salasobrien.com
E-Mail admin@tsqeng.com

PROJECT ADMINISTERED BY:
SAN BERNARDINO COUNTY
PROJECT & FACILITIES
MANAGEMENT DEPARTMENT

385 N. ARROWHEAD AVE.
SAN BERNARDINO, CA 92415

PROJECT NAME:
SAN BERNARDINO
COUNTY FIRE
DEPARTMENT:
FIRE STATION 226

PROJECT # 10.10.1032
CIP #21-037
CAFM # SAB198
APN # 0273-011-22

1920 DEL ROSA AVE N.
SAN BERNARDINO,
CA 92404

ISSUE INFORMATION:

DATE:	INFORMATION:
04-11-2022	20% CD SET
04-28-2022	50% CD SET
06-15-2022	95% CD SET
09-16-2022	95% CD- 3rd BAY
10-03-2022	PLAN CHECK

SHEET INFORMATION:
STK PROJECT NO.: 374-154-21
SCALE: AS NOTED
DATE: JANUARY 2021
PLOT DATE: –
DRAWING NAME:

SEAL:

REGISTERED PROFESSIONAL ENGINEER
M29230
Exp. 3/31/23
MECHANICAL
STATE OF CALIFORNIA

SHEET TITLE:
TITLE 24

SHEET NO.:
M0.3

Project Name:	San Bernardino FS	NRCC-PRF-01-E	Page 10 of 10
Project Address:	1920 Del Rosa Ave. N. San Bernardino 92404	Calculation Date/Time:	16:45, Mon, Jun 13, 2022
Input File Name:	SBFS T-24.cibd19x		

DOCUMENTATION AUTHOR'S DECLARATION STATEMENT

I certify that this Certificate of Compliance documentation is accurate and complete.

Documentation Author Name: Farzad Tadayon	Signature:
Company: Salas O'Brien Engineers	
Address: 3220 Executive Ridge, Suite 210	Signature Date: 2022-06-13
City/State/Zip: Vista CA 92081	CEA/ HERS Certification Identification (if applicable): M29230
Phone: 760.560.0100	

RESPONSIBLE PERSON'S DECLARATION STATEMENT

I certify the following under penalty of perjury, under the laws of the State of California:

1. The information provided on this Certificate of Compliance is true and correct.
2. I am eligible under Division 3 of the Business and Professions Code to accept responsibility for the building design or system design identified on this Certificate of Compliance (responsible designer)
3. The energy features and performance specifications, materials, components, and manufactured devices for the building design or system design identified on this Certificate of Compliance conform to the requirements of Title 24, Part 1 and Part 6 of the California Code of Regulations.
4. The building design features or system design features identified on this Certificate of Compliance are consistent with the information provided on other applicable compliance documents, worksheets, calculations, plans and specifications submitted to the enforcement agency for approval with this building permit application.
5. I will ensure that a completed signed copy of this Certificate of Compliance shall be made available with the building permit(s) issued for the building, and made available to the enforcement agency for all applicable inspections. I understand that a completed signed copy of this Certificate of Compliance is required to be included with the documentation the builder provides to the building owner at occupancy.

Responsible Envelope Designer Name:	Signature:	
Company: STK Architecture		
Address: 42095 Zevo Dr.	Date Signed:	
City/State/Zip: Temecula CA 92590		
Phone:	Title:	License #:
Responsible Lighting Designer Name:	Signature: NOT IN SCOPE	
Company:		
Address:	Date Signed:	
City/State/Zip:		
Phone:	Title:	License #:
Responsible Mechanical Designer Name: Farzad Tadayon	Signature:	
Company: Salas O'Brien		
Address: 3220 Executive Ridge Suite 210	Date Signed: 06/13/2022	
City/State/Zip: Vista CA 92081		
Phone: 760.560.0100	Title: MECHANICAL ENGINEER	License #: M29230

NOT FOR BID

STK
42095 ZEVO DR., TEMECULA, CALIFORNIA 92590-3780
Phone: 951.296.9110 Fax: 951.296.6079 Email: stk@stkinc.com

CONSULTANT:

SALAS O'BRIEN
[expect a difference]
3220 EXECUTIVE RIDGE
SUITE 210
VISTA, CA 92081
TEL: (760) 560-0100
#21189
ED | ES | SS | NP
www.salasobrien.com
E-Mail admin@tstgeng.com

PROJECT ADMINISTERED BY:

SAN BERNARDINO COUNTY
PROJECT & FACILITIES
MANAGEMENT DEPARTMENT

385 N. ARROWHEAD AVE.
SAN BERNARDINO, CA 92415

PROJECT NAME:

SAN BERNARDINO
COUNTY FIRE
DEPARTMENT:

FIRE STATION 226

PROJECT # 10.0.0.032

CIP #21-037

CAFM # SAB198

APN # 0273-011-22

1920 DEL ROSA AVE N.
SAN BERNARDINO,
CA 92404

ISSUE INFORMATION:

DATE:	INFORMATION:
04-11-2022	20% CD SET
04-28-2022	50% CD SET
06-15-2022	95% CD SET
09-16-2022	95% CD- 3rd BAY
10-03-2022	PLAN CHECK

SHEET INFORMATION:

STK PROJECT NO.: 374-154-21
SCALE: AS NOTED
DATE: JANUARY 2021
PLOT DATE: –
DRAWING NAME:

SEAL:

REGISTERED PROFESSIONAL ENGINEER
FARZAD TADAYON
No. M29230
Exp. 3/31/23
MECHANICAL
STATE OF CALIFORNIA

SHEET TITLE:

TITLE 24

SHEET NO.:

M0.4

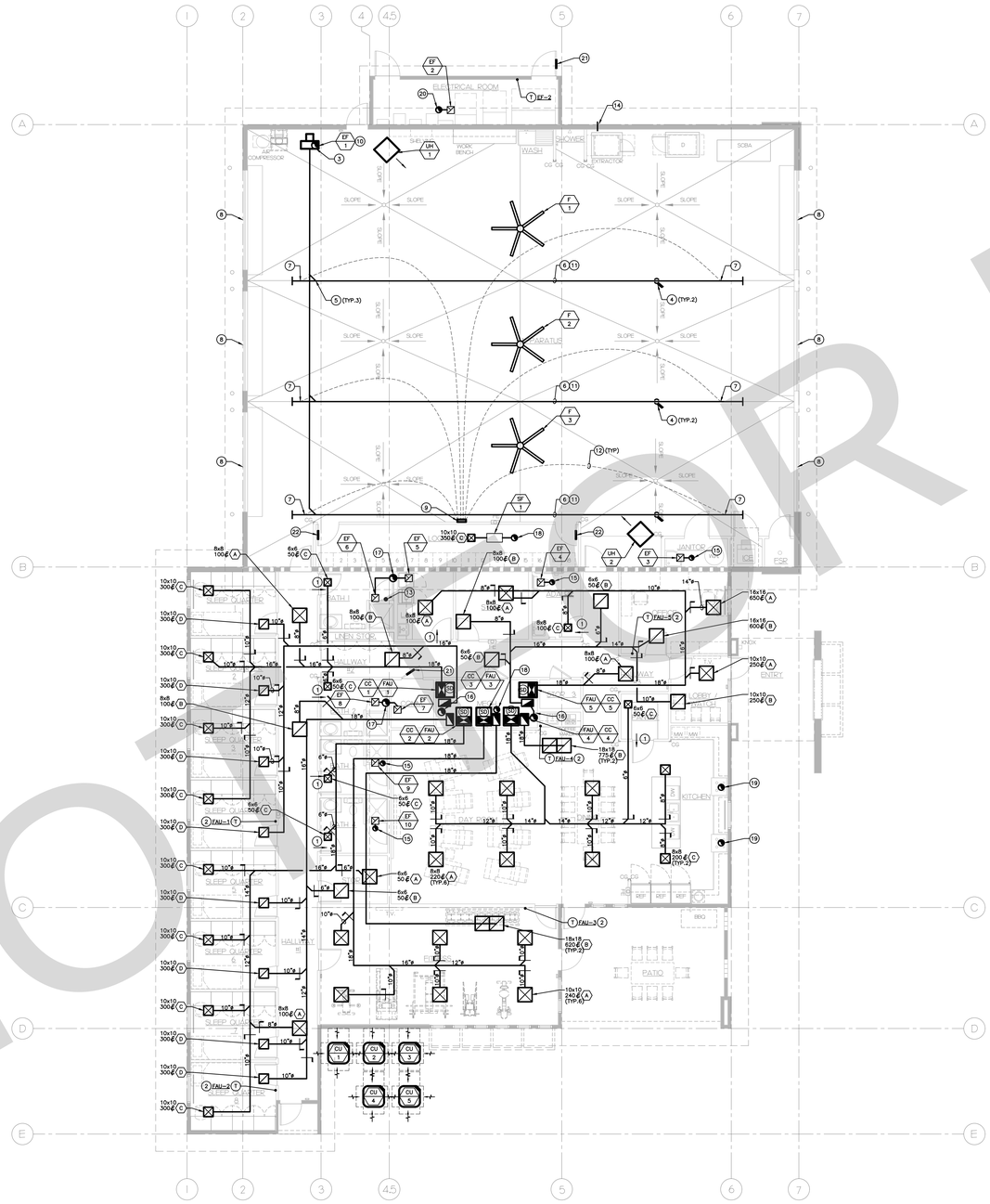

MECHANICAL FLOOR PLAN 1

1/8" = 1'-0"

NOT FOR BID

GENERAL NOTES

A. CONTRACTOR SHALL COORDINATE WITH ALL OTHER TRADES. IN CASE OF DISCREPANCIES OR ANY POTENTIAL CONFLICTS, INFORM THE ARCHITECT AND ENGINEER IN WRITING PRIOR TO START OF WORK.

B. FOR DUCT TAKE-OFF, SEE DETAIL 3/M5.1.

C. FOR DUCT SMOKE DETECTOR, SEE DETAIL 7/M5.2.

KEY NOTES

1. UNDERCUT DOOR 1".
2. FULLY PROGRAMMABLE THERMOSTAT. SEE 1/M5.1.
3. 12"ø VEHICLE EXHAUST DUCT UP THRU ROOF TO ROOF CAP. TERMINATE MINIMUM 3' ABOVE FINISHED ROOF. MAINTAIN DUCT MINIMUM 3' AWAY FROM EXTERIOR WALLS AND 10'-0" FROM BUILDING OPENINGS.
4. FLEXIBLE EXHAUST HOSE WITH FITTINGS AND CONNECTIONS AS SPECIFIED AND PER MANUFACTURER'S RECOMMENDATIONS.
5. 7"ø VEHICLE EXHAUST DUCT. SEE DETAIL 1/M5.2 ATTACHMENT TO RAIL SYSTEM. SEE SPECIFICATIONS FOR MATERIAL. SEE DETAIL 2/M5.2 FOR SUPPORT.
6. STRAIGHT RAIL SYSTEM FOR VEHICLE EXHAUST MOUNTING SHALL BE FIELD VERIFIED BY THE MANUFACTURER'S REPRESENTATIVE. SEE ARCHITECTURAL DRAWINGS FOR RAIL SUPPORT. MOUNT BOTTOM OF RAIL AT 14'-0" A.F.F.
7. SENSOR LOCATION FOR AUTO START. LOCATION SHALL BE WITHIN 5 FEET OF FRONT AND BACK OF RAIL. PROVIDE COMPRESSOR FITTING FOR ADDITIONAL DETAILS SEE SPECIFICATIONS AND MANUFACTURER'S INSTALLATION GUIDE.
8. ROLL UP APPARATUS DOOR. INSTALL WITHOUT WEATHER STRIPPING TO MAINTAIN 4.5 SF F.A.R. FOR VEHICLE EXHAUST MAKE UP AIR.
9. VEHICLE EXHAUST REMOVAL SYSTEM CONTROL PANEL. VERIFY EXACT LOCATION WITH OWNER PRIOR TO START OF WORK. MOUNT AS PER MANUFACTURER'S WRITTEN RECOMMENDATIONS.
10. VEHICLE EXHAUST FAN. FOR INSTALLATION, SEE DETAIL 10/M5.1.
11. CONTRACTOR SHALL PROVIDE STRUCTURAL CROSS MEMBERS AS REQUIRED BY THE MANUFACTURER FOR SUPPORT OF EXHAUST REMOVAL SYSTEM.
12. ROUTE LOW VOLTAGE CONTROL WIRING IN CONDUIT TO SENSOR CONNECTION LOCATION ON EACH RAIL. CONCEAL CONTROL WIRING AND INSTALL AS PER MANUFACTURER'S REQUIREMENTS.
13. 4"ø DRYER VENT UP THRU ROOF. PROVIDE WITH DRYER VENT BACK DRAFT DAMPER.
14. 4"ø DRYER VENT UP THRU WALL. PROVIDE WITH DRYER VENT BACK DRAFT DAMPER.
15. 8"ø EA DUCT UP THRU ROOF TO ROOF CAP.
16. 12"ø OA DUCT UP THRU ROOF TO ROOF CAP.
17. 12"ø EA DUCT UP THRU ROOF TO ROOF CAP.
18. 10"ø OA DUCT UP THRU ROOF TO ROOF CAP.
19. 10"ø RANGE VENT DUCT UP THRU ROOF TO ROOF CAP.
20. 10"ø EA DUCT UP THRU ROOF TO ROOF CAP.
21. 18x14 DOOR LOUVER. MINIMUM 0.88 SQFT. F.A.R. SEE ARCHITECTURAL DRAWINGS FOR EXACT SIZE, LOCATION, COLOR AND STYLE.
22. 12x8 DOOR LOUVER. MINIMUM 0.3 SQFT. F.A.R. SEE ARCHITECTURAL DRAWINGS FOR EXACT SIZE, LOCATION, COLOR AND STYLE.

STK
42095 ZEVO DR., TEMECULA, CALIFORNIA 92590-3780
Phone: 951.296.9110 Fax: 951.296.6079 Email: stk@stkinc.com

CONSULTANT:

SALASO'BRIEN
[expect a difference]
3220 EXECUTIVE RIDGE
SUITE 210
VISTA, CA 92081
TEL: (760) 560-0100
#21189
ED | ES | SS | NP
www.salasobrien.com
E-Mail admin@tsqeng.com

PROJECT ADMINISTERED BY:
SAN BERNARDINO COUNTY PROJECT & FACILITIES MANAGEMENT DEPARTMENT

385 N. ARROWHEAD AVE.
SAN BERNARDINO, CA 92415

PROJECT NAME:
SAN BERNARDINO COUNTY FIRE DEPARTMENT:
FIRE STATION 226

PROJECT # 10.0.0.032
CIP #21-037
CAFM # SAB198
APN # 0273-011-22

1920 DEL ROSA AVE N.
SAN BERNARDINO,
CA 92404

ISSUE INFORMATION:

DATE:	INFORMATION:
04-11-2022	20% CD SET
04-28-2022	50% CD SET
06-15-2022	95% CD SET
09-16-2022	95% CD- 3rd BAY
10-03-2022	PLAN CHECK

SHEET INFORMATION:
STK PROJECT NO.: 374-154-21
SCALE: AS NOTED
DATE: JANUARY 2021
PLOT DATE: –
DRAWING NAME:

SEAL:
REGISTERED PROFESSIONAL ENGINEER
No. M29230
Exp. 3/31/23
MECHANICAL
STATE OF CALIFORNIA

SHEET TITLE:
MECHANICAL FLOOR PLAN

SHEET NO.:
M2.1

GENERAL NOTES

A. CONTRACTOR SHALL COORDINATE WITH ALL OTHER TRADES. IN CASE OF DISCREPANCIES OR ANY POTENTIAL CONFLICTS, INFORM THE ARCHITECT AND ENGINEER IN WRITING PRIOR TO START OF WORK.

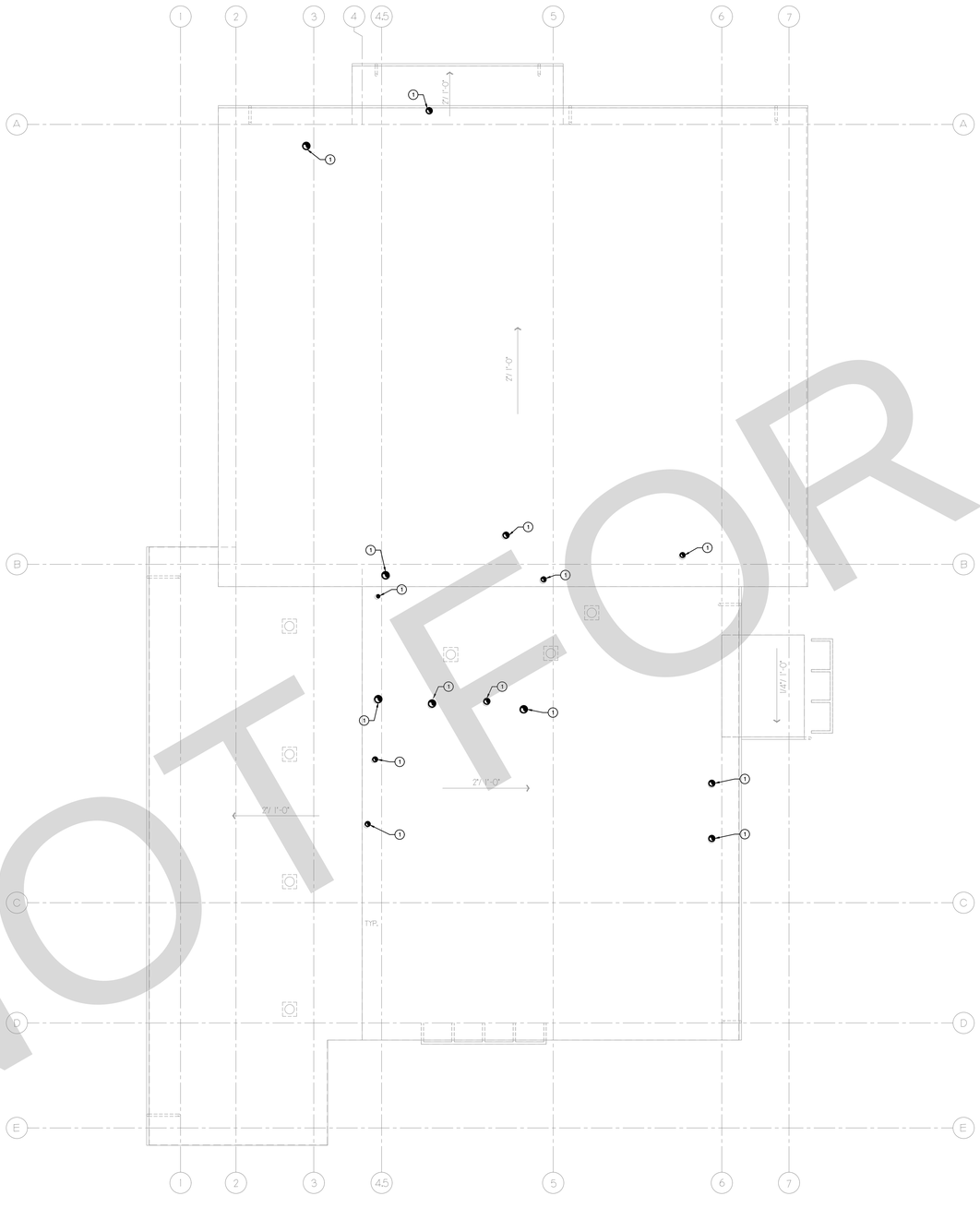

KEY NOTES

1. ROOF CAP. SEE DETAIL 4/M5.2.

NOT FOR BID

MECHANICAL ROOF PLAN 1

1/8" = 1'-0"

W N E S

STK
ALL INDEX JANUARY INC.
42095 ZEVO DR., TEMECULA, CALIFORNIA 92590-3780
Phone: 951.296.9110 Fax: 951.296.6079 Email: stk@stkinc.com

CONSULTANT:

SALASO'BRIEN
[expect a difference]
3220 EXECUTIVE RIDGE
SUITE 210
VISTA, CA 92081
TEL: (760) 560-0100
#21189
ED | ES | SS | NP
www.salasobrien.com
E-Mail admin@tsqeng.com

PROJECT ADMINISTERED BY:

SAN BERNARDINO COUNTY
PROJECT & FACILITIES
MANAGEMENT DEPARTMENT

385 N. ARROWHEAD AVE.
SAN BERNARDINO, CA 92415

PROJECT NAME:

SAN BERNARDINO
COUNTY FIRE
DEPARTMENT:

FIRE STATION 226

PROJECT # 10.10.10.032

CIP #21-037

CAFM # SAB198

APN # 0273-011-22

1920 DEL ROSA AVE N.
SAN BERNARDINO,
CA 92404

ISSUE INFORMATION:

DATE:	INFORMATION:
04-11-2022	20% CD SET
04-28-2022	50% CD SET
06-15-2022	95% CD SET
09-16-2022	95% CD- 3rd BAY
10-03-2022	PLAN CHECK

SHEET INFORMATION:

STK PROJECT NO.: 374-154-21
SCALE: AS NOTED
DATE: JANUARY 2021
PLOT DATE: –
DRAWING NAME:

SEAL:

SHEET TITLE:

MECHANICAL
ROOF PLAN

SHEET NO.:

M2.2

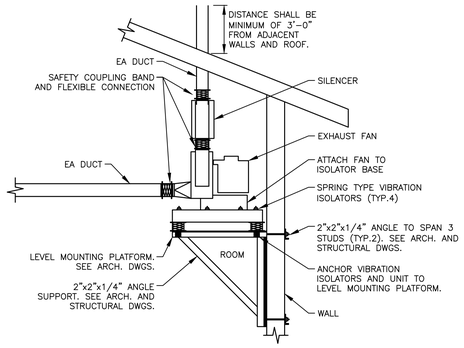

VEHICLE EXHAUST FAN MOUNTING DETAIL

SCALE: NONE | 10

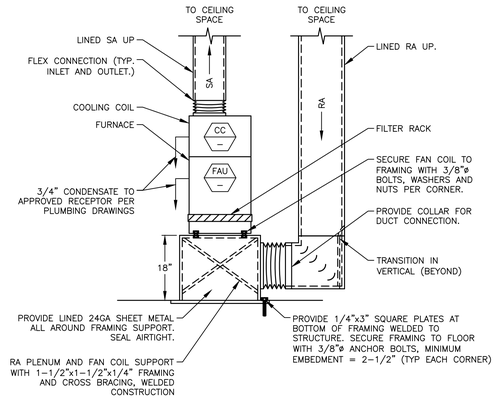

VERTICAL FURNACE INSTALLATION DETAIL

SCALE: NONE | 7

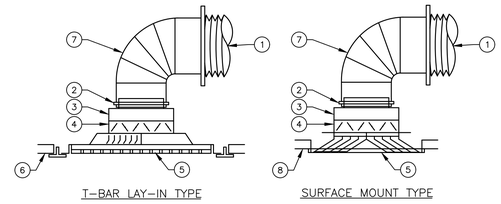

1. FLEXIBLE DUCT.
2. STAINLESS STEEL CLAMP (NO DUCT TAPE).
3. SQUARE TO ROUND ADAPTOR (WHERE INDICATED).
4. OPPOSED BLADE DAMPERS (WHERE INDICATED).
5. DIFFUSER OR GRILLE.
6. LAY-IN T-BAR CEILING.
7. RIGID 90° ELBOW.
8. HARD-LID CEILING.

CEILING DIFFUSER/REGISTER DETAIL

SCALE: NONE | 4

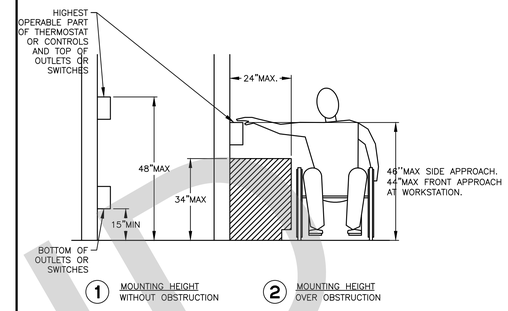

NOTE: ELECTRICAL OUTLETS, SWITCHES AND SIMILAR CONTROLS SHALL BE MOUNTED A MAXIMUM OF 48" ABOVE FINISHED FLOOR, MEASURED TO THE TOP OF THE ELECTRICAL BOX.

THE MINIMUM MOUNTING HEIGHT FOR SWITCHES AND OUTLETS IS 18"A.F.F. MEASURED FROM CENTERLINE OF ELECTRICAL BOX.

THERMOSTAT MOUNTING DETAIL

SCALE: NONE | 1

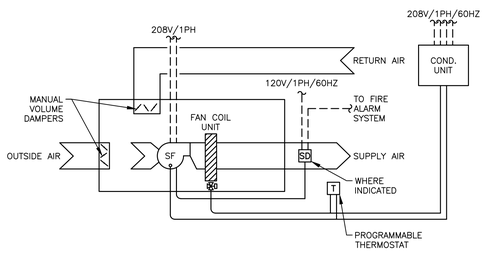

NOTE: CONTRACTOR SHALL PROVIDE ALL CONTROL WIRING INSIDE CONDUIT AND ALL OTHER ACCESSORIES REQUIRED FOR PROPER OPERATION OF SYSTEM AS RECOMMENDED BY MANUFACTURER.

- - - - - - - WIRING PROVIDED AND INSTALLED BY DIVISION 16
——————— WIRING PROVIDED AND INSTALLED BY DIVISION 15

SPLIT SYSTEM HEAT PUMP CONTROL DIAGRAM

SCALE: NONE | 11

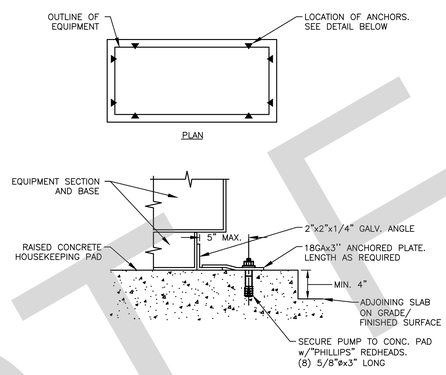

CONDENSING UNIT MOUNTING DETAIL

SCALE: NONE | 8

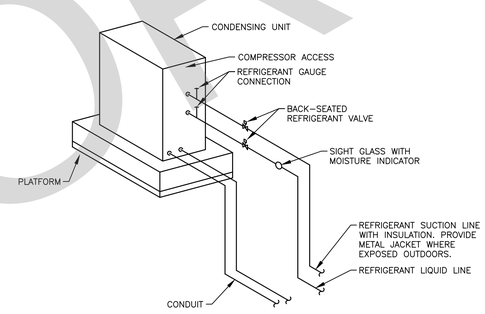

NOTE: NOT A MOUNTING DETAIL.

CONDENSING UNIT PIPING DIAGRAM

SCALE: NONE | 5

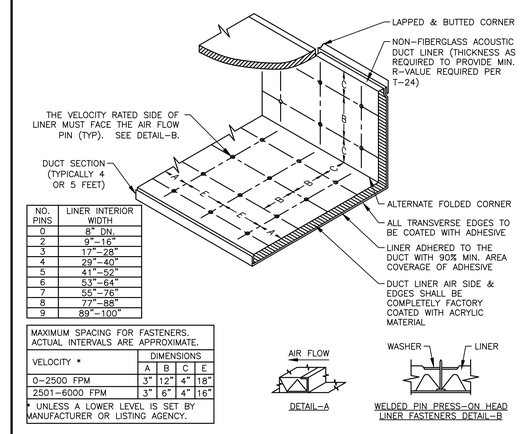

NO. PINS	LINER INTERIOR WIDTH
0	8" DN.
2	9"-16"
3	17"-28"
4	29"-40"
5	41"-52"
6	53"-64"
7	55"-76"
8	77"-88"
9	89"-100"

MAXIMUM SPACING FOR FASTENERS. ACTUAL INTERVALS ARE APPROXIMATE.				
VELOCITY *	DIMENSIONS			
	A	B	C	E
0-2500 FPM	3"	12"	4"	18"
2501-6000 FPM	3"	6"	4"	16"

* UNLESS A LOWER LEVEL IS SET BY MANUFACTURER OR LISTING AGENCY.

DUCT LINER DETAIL

SCALE: NONE | 2

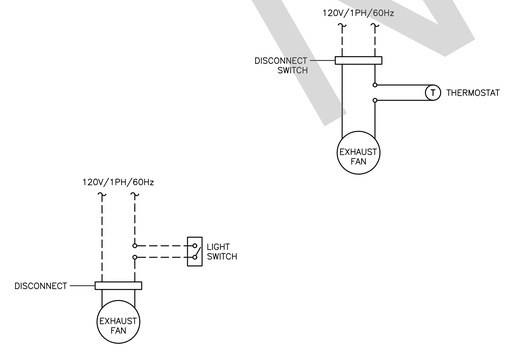

NOTE:
CONTRACTOR SHALL PROVIDE ALL CONTROL WIRING INSIDE CONDUIT AND ALL OTHER ACCESSORIES REQUIRED FOR PROPER OPERATION OF SYSTEM AS RECOMMENDED BY MANUFACTURER.

- - - - - - - WIRING PROVIDED AND INSTALLED BY DIVISION 16
——————— WIRING PROVIDED AND INSTALLED BY DIVISION 15

EXHAUST FAN CONTROL DIAGRAMS

SCALE: NONE | 12

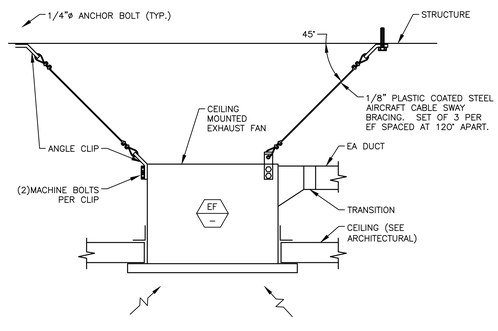

CEILING MOUNTED EXHAUST FAN DETAIL

SCALE: NONE | 9

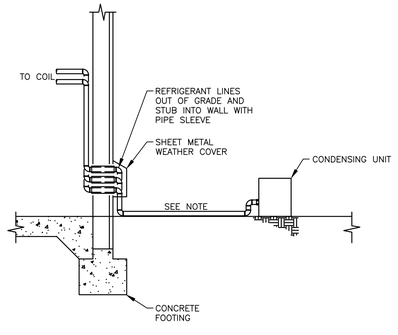

NOTE: REFRIGERANT PIPES TO CONDENSING UNIT. SUPPORT ON WOOD BLOCKS. PROVIDE STAINLESS STEEL JACKET AND INSULATION.

REFRIGERANT PIPE TO UNIT DETAIL

SCALE: NONE | 6

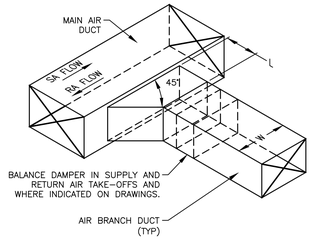

1. SAME SIZE.
2. FLEXIBLE DUCT.
3. CLAMP (NO DUCT TAPE).
4. MANUAL BALANCING DAMPER.
5. 45° LATERAL BRANCH.
6. MAIN DUCT.

NOTE: L=1/4W (4" MIN.).

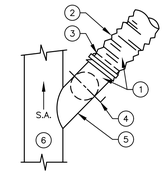

DUCT TAKE-OFF DETAIL

SCALE: NONE | 3

NOT FOR BID

STK
42095 ZEVO DR., TEMECULA, CALIFORNIA 92590-3780
Phone: 951.296.9110 Fax: 951.296.6079 Email: stk@stkinc.com

CONSULTANT:
SALASO'BRIEN
[expect a difference]
3220 EXECUTIVE RIDGE
SUITE 210
VISTA, CA 92081
TEL: (760) 560-0100
#21189
ED | ES | SS | NP
www.salasobrien.com
E-Mail admin@tsqeng.com

PROJECT ADMINISTERED BY:
SAN BERNARDINO COUNTY
PROJECT & FACILITIES
MANAGEMENT DEPARTMENT

385 N. ARROWHEAD AVE.
SAN BERNARDINO, CA 92415

PROJECT NAME:
SAN BERNARDINO COUNTY FIRE DEPARTMENT:
FIRE STATION 226

PROJECT # 10.0.0.032
CIP #21-037
CAFM # SAB198
APN # 0273-011-22

1920 DEL ROSA AVE N.
SAN BERNARDINO,
CA 92404

ISSUE INFORMATION:

DATE:	INFORMATION:
04-11-2022	20% CD SET
04-28-2022	50% CD SET
06-15-2022	95% CD SET
09-16-2022	95% CD- 3rd BAY
10-03-2022	PLAN CHECK

SHEET INFORMATION:
STK PROJECT NO.: 374-154-21
SCALE: AS NOTED
DATE: JANUARY 2021
PLOT DATE: -
DRAWING NAME:

SEAL:
REGISTERED PROFESSIONAL ENGINEER
No. M29230
Exp. 3/31/23
MECHANICAL
STATE OF CALIFORNIA

SHEET TITLE:
MECHANICAL DETAILS

SHEET NO.:
M5.1

NOT FOR BID

NOT USED

SCALE NONE | 10

DUCT SMOKE DETECTOR MOUNTING DETAIL

SCALE NONE | 7

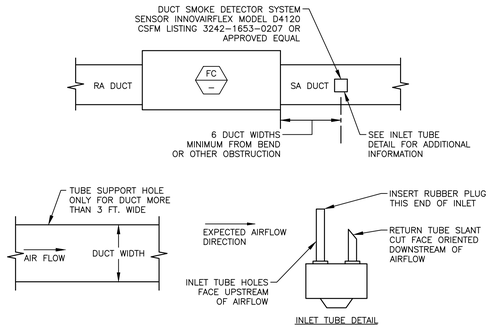

NOTE: PROVIDE WITH U.L. 268A AND CSFM LISTED, PHOTOELECTRIC-TYPE DUCT SMOKE DETECTOR IN SUPPLY DUCT. DIVISION 23 TO PROVIDE DETECTOR, DIVISION 26 TO PROVIDE 120V-1PH POWER.

ROOF CAP DETAIL

SCALE NONE | 4

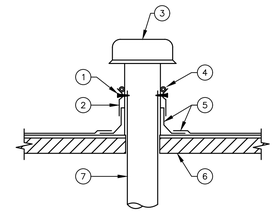

1. SECURE w/#10 S.M.S.-2 EACH SIDE
2. COUNTER FLASHING
3. ROOF CAP
4. WATER PROOF SEALANT ALL AROUND
5. ROOFING AS PER ARCH. DWGS.
6. ROOF STRUCTURE
7. EXHAUST DUCT THROUGH ROOF

VEHICLE EXHAUST ATTACHMENT DETAIL

SCALE NONE | 1

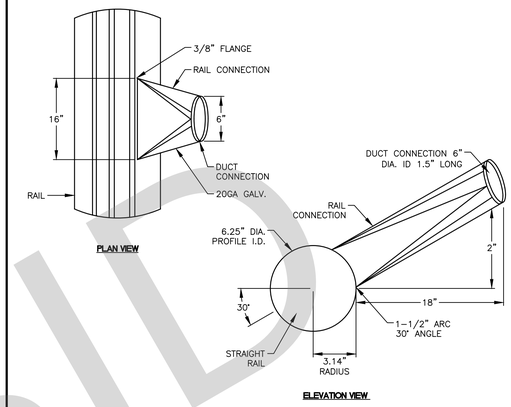

NOT USED

SCALE NONE | 11

NOT USED

SCALE NONE | 8

UNIT HEATER CONTROL DIAGRAM

SCALE NONE | 5

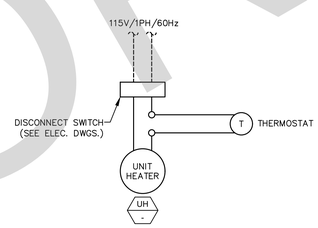

NOTE: CONTRACTOR SHALL PROVIDE ALL CONTROL WIRING INSIDE CONDUIT AND ALL OTHER ACCESSORIES REQUIRED FOR PROPER OPERATION OF SYSTEM AS RECOMMENDED BY MANUFACTURER.

- - - - - - - WIRING PROVIDED AND INSTALLED BY DIVISION 16

——————— WIRING PROVIDED AND INSTALLED BY DIVISION 15

VEHICLE EXHAUST DUCT MOUNTING DETAIL

SCALE NONE | 2

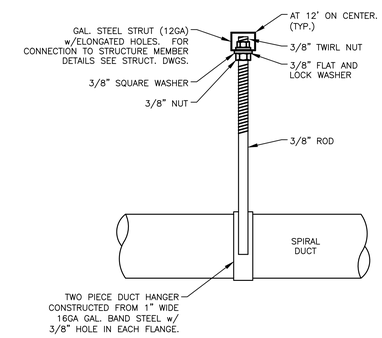

NOTE: PROVIDE GUARDS AS NECESSARY TO PROTECT DUCT FROM DAMAGE.

NOT USED

SCALE NONE | 12

NOT USED

SCALE NONE | 9

UNIT HEATER MOUNTING DETAIL

SCALE NONE | 6

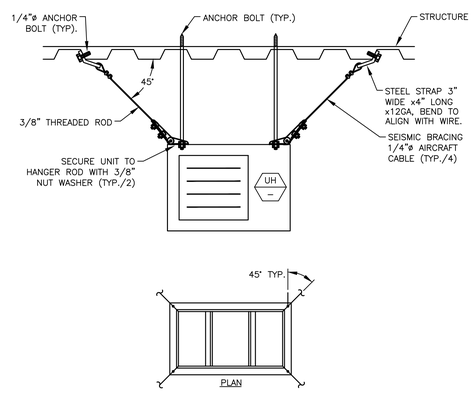

CONCENTRIC VENT TERMINATION DETAIL

SCALE NONE | 3

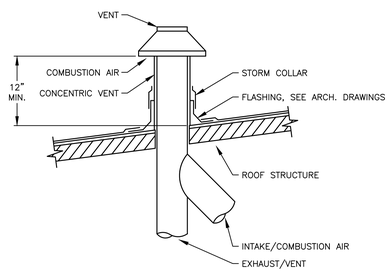

STK
42095 ZEVO DR., TEMECULA, CALIFORNIA 92590-3780
Phone: 951.296.9110 Fax: 951.296.6079 Email: stk@stkinc.com

CONSULTANT:

SALASO'BRIEN
[expect a difference]
3220 EXECUTIVE RIDGE
SUITE 210
VISTA, CA 92081
TEL: (760) 560-0100
#21189
ED | ES | SS | NP
www.salasobrien.com
E-Mail admin@tsqeng.com

PROJECT ADMINISTERED BY:
SAN BERNARDINO COUNTY PROJECT & FACILITIES MANAGEMENT DEPARTMENT

385 N. ARROWHEAD AVE.
SAN BERNARDINO, CA 92415

PROJECT NAME:
SAN BERNARDINO COUNTY FIRE DEPARTMENT:
FIRE STATION 226

PROJECT # 10.0.0.032
CIP #21-037
CAFM # SAB198
APN # 0273-011-22

1920 DEL ROSA AVE N.
SAN BERNARDINO,
CA 92404

ISSUE INFORMATION:

DATE:	INFORMATION:
04-11-2022	20% CD SET
04-28-2022	50% CD SET
06-15-2022	95% CD SET
09-16-2022	95% CD- 3rd BAY
10-03-2022	PLAN CHECK

SHEET INFORMATION:
STK PROJECT NO.: 374-154-21
SCALE: AS NOTED
DATE: JANUARY 2021
PLOT DATE: –
DRAWING NAME:

SEAL:

SHEET TITLE:
MECHANICAL DETAILS

SHEET NO.:
M5.2

PLUMBING LEGEND

SYMBOL	ABBREVIATION	DESCRIPTION
	S	SEWER PIPE
OW	OW	OILY WASTE PIPE
GW	GW	GREASE WASTE PIPE
PW	PW	PUMPED (FORCED) WASTE PIPE
IW	IW	INDIRECT WASTE PIPE
	V	VENT PIPE
CW	CW	COLD WATER PIPE
ICW	ICW	INDUSTRIAL COLD WATER PIPE
SCW	SCW	SOFT COLD WATER PIPE
HW	HW	HOT WATER PIPE
IHW	IHW	INDUSTRIAL HOT WATER PIPE
	HWR	HOT WATER RETURN PIPE
140	140	140°F HOT WATER PIPE
R	R	RECLAIMED WATER PIPE
G	G	LOW PRESSURE NATURAL GAS PIPE
MPG	MPG	MEDIUM PRESSURE NATURAL GAS PIPE
HPG	HPG	HIGH PRESSURE NATURAL GAS PIPE
LPG	LPG	LIQUEFIED PETROLEUM GAS PIPE
CD	CD	CONDENSATE DRAIN PIPE
SCD	SCD	SECONDARY CONDENSATE DRAIN PIPE
PCD	PCD	PUMPED CONDENSATE DRAIN PIPE
RD	RD	ROOF DRAIN PIPE
ORD	ORD	OVERFLOW ROOF DRAIN PIPE
CA	CA	COMPRESSED AIR PIPE
	FCO	FLOOR CLEAN OUT
	GCO	GRADE CLEAN OUT
	WCO	WALL CLEAN OUT
	FC	FLEXIBLE CONNECTION
	SOV	SHUT OFF VALVE
	GC	GAS COCK
	CV	CHECK VALVE
	BV	BALL VALVE
	PRV	PRESSURE REDUCING VALVE
	BLV	BALANCING VALVE
PTR	PTR	PRESSURE AND TEMPERATURE RELIEF VALVE
	U	UNION
		CAPPED PIPE
	CONT	CONTINUED OR CONTINUATION
TP	TP	TRAP PRIMER LINE
	WHA	WATER HAMMER ARRESTOR
	RPBP	REDUCED PRESSURE BACKFLOW PREVENTER
	HB	HOSE BIBB
		PIPE DOWN OR DROP
		PIPE UP OR RISE
		VALVE ON DROP
		VALVE ON RISE
	T	THERMOMETER
	AS	AQUASTAT
	P.O.D.	POINT OF DISCONNECT
	POC	POINT OF CONNECTION
	AD, FD	AREA DRAIN OR FLOOR DRAIN
	FS, RR	FLOOR SINK OR ROOF RECEPTOR
	VTR	VENT THROUGH ROOF
	DEMO	DEMOLITION OR DEMOLISH
	RELO	RELOCATE
	CIRC PUMP	CIRCULATING PUMP
ø	DIA, DIAM	DIAMETER

ABBREVIATION	DESCRIPTION
ABV	ABOVE
A/C	ABOVE CEILING
AGA	AMERICAN GAS ASSOCIATION
ANSI	AMERICAN NATIONAL STANDARD INSTITUTE
ASME	AMERICAN SOCIETY FOR MECHANICAL ENGINEERS
ASSE	AMERICAN SOCIETY FOR SANITARY ENGINEERS
ASTM	AMERICAN SOCIETY FOR TESTING AND MATERIALS
ADA	AMERICANS WITH DISABILITIES ACT
AFF	ABOVE FINISHED FLOOR
AFG	ABOVE FINISHED GRADE
A/G	ABOVE GRADE
AP	ACCESS PANEL
ARCH	ARCHITECT OR ARCHITECTURAL
BT	BATH TUB
BEL	BELOW
B/F	BELOW FLOOR
B/G	BELOW GRADE
BOP	BOTTOM OF PIPE
B/S	BELOW SLAB
BTU	BRITISH THERMAL UNIT
BTUH	BRITISH THERMAL UNITS PER HOUR
CBC	CALIFORNIA BUILDING CODE
CEC	CALIFORNIA ELECTRICAL CODE
CFC	CALIFORNIA FIRE CODE
CMC	CALIFORNIA MECHANICAL CODE
CPC	CALIFORNIA PLUMBING CODE
CI	CAST IRON
CISPI	CAST IRON SOIL PIPE INSTITUTE
CLG	CEILING
CP	CIRCULATION PUMP
CL	CLARIFIER
CLR	CLEAR
CONC	CONCRETE
CONN	CONNECT OR CONNECTION
CONTR	CONTRACTOR
CFH	CUBIC FEET PER HOUR
CFM	CUBIC FEET PER MINUTE
°C	DEGREES CELSIUS
°F	DEGREES FAHRENHEIT
DIV	DIVISION
DWG(S)	DRAWING(S)
EA	EACH
(E)	EXISTING
ELEC	ELECTRICAL
ELEV	ELEVATION
ET	EXPANSION TANK
FF	FINISHED FLOOR
FPM	FEET PER MINUTE
FLR	FLOOR
FT	FEET OR FOOT
FU	FIXTURE UNIT
FOG	FAT, OIL, AND GREASE
GA	GAUGE
GALV	GALVANIZED
GPC	GALLONS PER CYCLE
GPF	GALLONS PER FLUSH
GPH	GALLONS PER HOUR
GPM	GALLONS PER MINUTE
GD	GARBAGE DISPOSAL
HD	HEAD
GI	GREASE INTERCEPTOR
HDR	HEADER
HR	HOUR
IM	ICE MAKER SUPPLY BOX
IES	ILLUMINATING ENGINEERS SOCIETY
IND	INDIRECT
IAPMO	INTERNATIONAL ASSOCIATION OF PLUMBERS AND MECHANICAL OFFICIALS
IBC	INTERNATIONAL BUILDING CODE
IMC	INTERNATIONAL MECHANICAL CODE
IPC	INTERNATIONAL PLUMBING CODE
INV	INVERT
IE	INVERT ELEVATION
KEC	KITCHEN EQUIPMENT CONTRACTOR
KG	KILOGRAMS
KPQ	KILOPASCALS
KS	KITCHEN SINK
LS	LAUNDRY SINK
L, LAV	LAVATORY
L/S	LITERS PER SECOND
LPF	LITERS PER FLUSH
MH	MANHOLE
MFR	MANUFACTURER
MSS	MANUFACTURERS STANDARDIZATION SOCIETY
MAX	MAXIMUM
MECH	MECHANICAL
MSA	MEDIUM PRESSURE GAS METER SET ASSEMBLY
MIL	0.001 INCH
mm	MILLIMETER
MIN	MINIMUM
MS	MOP SINK
MTD	MOUNTED
NSF	NATIONAL SANITATION FOUNDATION
NPSH	NET POSITIVE SUCTION HEAD
NOM	NOMINAL
NIC	NOT IN CONTRACT
NTS	NOT TO SCALE
NO	NUMBER
PLBG	PLUMBING
PDI	PLUMBING AND DRAINAGE INSTITUTE
PE	POLYETHYLENE
LBS	POUNDS
PSIG	POUNDS PER SQUARE INCH GAUGE
PD	PRESSURE DROP
QTY	QUANTITY
REQ'D	REQUIRED
RI	ROUGH-IN
SCH	SCHEDULE
SH	SHOWER
SOV	SHUT-OFF VALVE
SPEC	SPECIFICATION
SF	SQUARE FEET
SS	STAINLESS STEEL
STRUC	STRUCTURAL
TEMP	TEMPERATURE
MBH	THOUSANDS OF BRITISH THERMAL UNITS PER HOUR
THRU	THROUGH
TDH	TOTAL DEVELOPED HEAD
TDL	TOTAL DEVELOPED LENGTH
TEL	TOTAL EQUIVALENT LENGTH
TYP	TYPICAL
UNO	UNLESS NOTED OTHERWISE
UL	UNDERWRITERS LABORATORIES
UBC	UNIFORM BUILDING CODE
UMC	UNIFORM MECHANICAL CODE
UPC	UNIFORM PLUMBING CODE
UR	URINAL
VCP	VITRIFIED CLAY PIPE
V/PH/Hz	VOLTS/PHASE/HERTZ
WB, WSB	WASHING MACHINE SUPPLY BOX
WC	WATER CLOSET
WHA	WATER HAMMER ARRESTOR
WH	WATER HEATER
YB	YARD BOX

PLUMBING GENERAL NOTES:

1. THESE DOCUMENTS MAY NOT BE USED FOR ANY REPRODUCTION, BIDDING, OR CONSTRUCTION UNLESS AUTHORIZED, IN WRITING, BY SALAS O'BRIEN AND THE ENGINEER OF RECORD RESPONSIBLE FOR THEIR PREPARATION.
2. CONTRACTOR SHALL FIELD VERIFY THE LOCATIONS OF ALL EXISTING UTILITY PIPES PRIOR TO START OF WORK. NECESSARY ADJUSTMENTS TO THE PLUMBING LAYOUT SHALL BE DONE AT NO EXTRA COST.
3. CONTRACTOR SHALL NOTIFY ALL LOCAL UTILITY COMPANIES INCLUDING BUT NOT LIMITED TO THE GAS COMPANY, ELECTRIC COMPANY, TELEPHONE COMPANY, AND THE WATER DEPARTMENT, ABOUT THE EXTENT OF PLUMBING WORK. ALL EXCAVATION WORK SHALL BE APPROVED BY ALL UTILITY COMPANIES TO ASSURE PREVENTION OF INTERRUPTION OF EXISTING SERVICES PRIOR TO START OF WORK.
4. ALL PLUMBING WORK SHALL MEET OR EXCEED THE REQUIREMENTS OF THE CALIFORNIA PLUMBING CODE, CALIFORNIA BUILDING CODE, CALIFORNIA MECHANICAL CODE, CALIFORNIA ADMINISTRATIVE CODE. TITLE 24, AMERICANS WITH DISABILITIES ACT (ADA), NATIONAL FIRE PROTECTION ASSOCIATION (NFPA), THE LOCAL CITY AND COUNTY CODES, AND ALL OTHER CODES HAVING JURISDICTION. IN CASE OF CONFLICT, THE MORE STRICT REGULATIONS SHALL GOVERN.
5. ALL PLUMBING WORK SHALL BE COORDINATED WITH THE WORKS OF OTHER TRADES PRIOR TO START OF WORK. NECESSARY ADJUSTMENTS SHALL BE MADE AT NO EXTRA COST.
6. FOR MINIMUM PIPE SIZE CONNECTIONS TO EACH PLUMBING FIXTURE SEE PLUMBING FIXTURE SCHEDULE. THESE VALUES ARE MINIMUM; LARGER CONNECTIONS MAY RESULT BASED ON THE DIFFERENT MANUFACTURER'S RECOMMENDATIONS.
7. MANUFACTURER'S NAMES AND MODEL NUMBERS SHOWN FOR PLUMBING FIXTURES AND EQUIPMENT ARE FOR REFERENCE ONLY. OTHER MANUFACTURERS WHICH CAN MEET THE DESIGN REQUIREMENTS OF THE PLUMBING SYSTEM MAY BE SUBSTITUTED UPON APPROVAL FROM THE ARCHITECT AND THE OWNER.
8. PROVIDE DIELECTRIC FITTINGS FOR DISSIMILAR METALS IN CONTACT.
9. PROVIDE HANGERS AND SUPPORTS FOR PIPING IN ACCORDANCE WITH THE RECOMMENDATIONS OF MSS SP-69-2003.
10. PROVIDE VALVES AT THE FOLLOWING LOCATIONS:
    A. WATER MAIN SHUT-OFF VALVE IN VALVE BOX.
    B. VALVE WITH HOSE CONNECTION ON DOWNSTREAM SIDE OF THE MAIN SHUT-OFF VALVE.
    C. SHUT-OFF VALVE ON EACH SUPPLY TO EACH FIXTURE AND EQUIPMENT ITEM NOT PROVIDED WITH CONTROL STOP OR OTHER AUXILIARY SHUT-OFF VALVE. INSTALL SHUT-OFF VALVES SO THAT STEMS EITHER ARE VERTICAL WITH HANDWHEELS OR OPERATORS ON TOP OR ARE HORIZONTAL AND SO THAT VALVES ARE EASILY ACCESSIBLE FOR OPERATION, SERVICE, REMOVAL AND REPLACEMENT.
11. PROVIDE SLEEVES FOR ALL PIPE AND TUBING PASSING THROUGH FLOORS, ROOFS, AND WALLS. PACK CAULK INTO THE SPACE AROUND THE PIPE OR TUBING. PROVIDE FLASHING FOR ALL PIPES EXTENDING THROUGH THE ROOF.
12. ALL VENT TERMINATIONS AT ROOF SHALL BE AT LEAST 10 FEET AWAY FROM OUTSIDE AIR INTAKES, OPERABLE WINDOWS, AND BUILDING OPENINGS.
13. FILL CRACKS BETWEEN FIXTURES AND WALL/FLOORS WITH SILICONE RUBBER SEALANT.
14. LOCATE, SIZE, AND INSTALL WATER HAMMER ARRESTERS IN ACCORDANCE WITH PLUMBING AND DRAINAGE INSTITUTE STANDARD NO. WH-201.
15. INSTALL FIXTURES IN ACCORDANCE WITH THE MANUFACTURER'S RECOMMENDATIONS AND ALL APPLICABLE CODES. SECURE FLOOR OUTLET OF FLOOR-MOUNTED FIXTURES TO DRAINAGE CONNECTIONS AND FLOOR IN A RIGID MANNER. RIGIDLY SUPPORT WALL-HUNG FIXTURES BY MEANS OF METAL SUPPORTING MEMBERS. USE CHROMIUM-PLATED BRASS BOLTS, NUTS, AND WASHERS WHERE EXPOSED. ALL CONNECTIONS SHALL BE MADE GAS-TIGHT AND WATER-TIGHT. USE OF PUTTY AND PLASTICS FOR GASKETS WILL NOT BE PERMITTED.
16. PROVIDE ALL FIXTURE COMPONENTS AS INDICATED ON DRAWINGS. PROVIDE ADDITIONAL COMPONENTS AS PER MANUFACTURER'S RECOMMENDATIONS FOR PROPER OPERATION OF THE FIXTURES.
17. PROVIDE EACH PLUMBING FIXTURE (INCLUDING HOSE BIBBS) WITH AN INDIVIDUAL STOP OR COMPRESSION VALVE OF POLISHED CHROME-PLATED LOOSE KEY TYPE.
18. WHERE DEPTHS OR INVERTS ELEVATIONS ARE NOT INDICATED, PROVIDE MINIMUM COVERAGE (ABOVE TOP OF PIPES) AS FOLLOWS:
    A. ANY PIPING UNDER SLAB (TOP OF PIPE TO UNDERSIDE OF SLAB): 18 INCHES.
    B. CAST IRON AND COPPER PIPES IN OTHER LOCATIONS: 18 INCHES.
    C. EXCAVATE TO UNDISTURBED EARTH: CUT LEVEL AND FORM TRUE. REMOVE DEBRIS, RUBBISH AND SOFT MATERIAL (SUCH AS MUD). WHERE ROCK IS ENCOUNTERED, UNDERCUT TRENCHES 6-INCHES AND FILL WITH WELL TAMPED NEUTRAL SAND AND PEA GRAVEL TO PROPER PIPE ELEVATION. DURING EXCAVATION FREE OF STANDING WATER. UNDERCUT TRENCH 6-INCHES AND INSTALL PIPING IN A 6-INCH NEUTRAL SAND ENVELOPE.
19. BACKFILL TO A POINT 12-INCHES ABOVE TOP OF PIPING WITH EARTH (EXCAVATED MATERIAL MAY BE USED) FREE OF CLAY, DEBRIS, RUBBISH, ROCKS, OR CLODS OVER 4-INCHES IN THE GREATEST DIMENSION. BACKFILL ABOVE 12-INCHES FROM TOP OF PIPING MAY BE WITH EXCAVATED MATERIAL. APPLY BACKFILL BY HAND IN 6-INCH DEEP LAYERS THE FULL WIDTH OF THE TRENCH. MOISTEN EACH LAYER (DO NOT FLOOD OR PUDDLE), AND HAND TAMP TO A MINIMUM 90 PERCENT COMPACTION BEFORE PROCEEDING WITH THE NEXT LAYER OF BACKFILL.
20. DO NOT EXCAVATE UNDER FOUNDATIONS OR FOOTINGS EXCEPT IN MANNER PERMITTED BY THE ARCHITECT. DO NOT BACKFILL UNTIL INSTALLED PIPING HAS BEEN SUCCESSFULLY TESTED.
21. VERIFICATION OF WATER AGENCY APPROVAL SHALL BE SUBMITTED TO THE BUILDING AND SAFETY DIVISION PRIOR TO ISSUANCE OF A PLUMBING PERMIT FOR THIS PROJECT.
22. ALL PENETRATIONS THRU FIRE RATED ASSEMBLIES SHALL BE PACKED WITH APPROVED FIRE PROOFING. FOR LOCATIONS OF FIRE RATED ASSEMBLIES, SEE ARCHITECTURAL PLANS.
23. ROUTE ALL PIPES AS HIGH AS POSSIBLE IN EXPOSED LOCATIONS. COORDINATE ROUTING WITH ALL OTHER TRADES PRIOR TO START OF WORK.
24. NO SPRAY FOAM INSULATION SHALL BE APPLIED TO AREAS CONTAINING PEX PIPING.

PLUMBING MANDATORY MEASURES

1. ALL PLUMBING SYSTEM COMPONENTS SHALL MEET OR EXCEED THE REQUIREMENTS OF CURRENT CBC, CMC, CPC, NEC, NFPA, ASTM, ANSI, AND ALL LOCAL AND STATE CODE REQUIREMENTS. (SEE BELOW)
2. ALL PLUMBING EQUIPMENT LISTED IN OF THE 2019 CALIFORNIA CODE OF REGULATIONS (CCR), TITLE-24, PART 6, SECTION 110.3 ENERGY EFFICIENCY STANDARDS MUST BE CERTIFIED BY THE MANUFACTURER TO MEET OR EXCEED SPECIFICATIONS OR EFFICIENCIES ADOPTED BY THE CEC.
3. ALL HEATERS FOR DOMESTIC HOT WATER MUST BE CERTIFIED BY THE MANUFACTURER TO MEET THE SPECIFICATIONS OR EFFICIENCIES AS ADOPTED BY THE CEC IN ACCORDANCE WITH THE 2019 CALIFORNIA CODE OF REGULATIONS (CCR), TITLE-24, PART 6, SECTION 110.3 RESIDENTIAL NON-RESIDENTIAL.
4. ALL GAS APPLIANCES MUST HAVE PILOTLESS IGNITION SYSTEM IN ACCORDANCE WITH SECTION 110.5 OF THE 2019 CALIFORNIA CODE OF REGULATIONS, TITLE-24, PART 6, ENERGY EFFICIENCY STANDARDS, TABLE 4-4.
5. ALL INSULATING MATERIALS INSTALLED MUST BE CERTIFIED BY CALIFORNIA ENERGY COMMISSION TO MEET 2019 CALIFORNIA CODE OF REGULATIONS, TITLE-24, PART 6, ENERGY EFFICIENCY STANDARDS, SECTION 120.3 AND TABLE 4-15.
6. ALL INSULATION INSTALLED SHALL MEET THE FLAME SPREAD AND SMOKE DENSITY REQUIREMENTS OF 2019 CBC, PART 1, SECTION 720 AND 2019 CMC. SECTION 602.2.
7. ALL PIPING EXPOSED TO WEATHER SHALL BE METALLIC.
8. ALL FERROUS PIPING EXPOSED TO WEATHER SHALL BE GALVANIZED AND PAINTED.
9. ALL PIPES, FITTINGS AND FIXTURES USED TO CONVEY POTABLE WATER SHALL BE LEAD FREE IN COMPLIANCE WITH CPC SECTION 604.2.
10. ALL FIXTURES REQUIRED TO BE ACCESSIBLE SHALL BE INSTALLED AS PER THE LATEST REQUIREMENTS OF TITLE 24 AND ADA (AMERICANS WITH DISABILITIES ACT).
11. CROSS CONNECTION PROTECTION SHALL BE PROVIDED AT ALL POTABLE WATER SUPPLIED APPLIANCES AND EQUIPMENT (OTHER THAN THOSE LISTED IN INFORMATION BULLETIN 103).
12. A WATER HEATER PRESSURE AND TEMPERATURE RELIEF DRAIN THAT TERMINATES OUTSIDE THE BUILDING SHALL COMPLY WITH CPC SECTION 608.5.
13. WATER HEATER SHALL BE ANCHORED OR STRAPPED TO RESIST HORIZONTAL DISPLACEMENT DUE TO EARTHQUAKE MOTION PER CPC SECTION 507.2.
14. WATER HEATER SHALL COMPLY WITH CPC SECTION 608.3, FOR THERMAL EXPANSION REQUIREMENTS.
15. LAVATORY FAUCETS IN PUBLIC RESTROOM SHALL BE SELF CLOSING TYPE.
16. TUB AND SHOWER COMBINATIONS SHALL BE PROVIDED WITH MIXING VALVES PER CPC SECTION 408.3.
17. SHOWERHEADS SHALL BE 1.8 GPM AT 80PSI.
18. NONRESIDENTIAL LAVATORY FAUCETS SHALL BE 0.4 GPM MAXIMUM.
19. KITCHEN FAUCETS AND WASH FOUNTAINS SHALL BE 1.8 GPM MAXIMUM.
20. METERING FAUCETS SHALL BE 0.2 GPC MAXIMUM.
21. WATER CLOSETS (GRAVITY TANK TYPE, FLUSHOMETER TANK, FLUSHOMETER VALVE AND ELECTROMECHANICAL HYDRAULIC TYPE) SHALL BE 1.28 GPF MAXIMUM.
22. FLOOR-MOUNT URINALS SHALL BE 0.5 GPF MAXIMUM. WALL-MOUNT URINALS SHALL BE 0.125 GPF MAXIMUM.
23. ALL INSTALLATION OF PEX PIPE INSTALLED IN NEW CONSTRUCTION SHALL BE FLUSHED TWICE OVER A PERIOD OF AT LEAST ONE WEEK PER CPC SECTION 604.1.2. PEX.
    1) AT THE TIME OF FILL, EACH NEW PLUMBING FIXTURE SHALL HAVE A REMOVABLE TAG APPLIED STATING:
       a. THIS NEW PLUMBING SYSTEM SHALL BE FIRST FILLED AND FLUSHED ON _____(DATE) BY _____(NAME). THE STATE OF CALIFORNIA REQUIRES THAT THE SYSTEM BE FLUSHED AFTER STANDING AT LEAST ONE WEEK AFTER THE FILL DATE SPECIFIED ABOVE. IF THIS SYSTEM IS USED EARLIER THAN ONE WEEK AFTER THE FILL DATE ABOVE. IF THIS SYSTEM IS USED EARLIER THAN ONBE WEEK AFTER THE FILL DATE, THE WATER MUST BE ALLOWED TO RUN FOR AT LEAST TWO MINUTES PRIOR TO USE FOR HUMAN CONSUMPTION. THE TAG MAY NOT BE REMOVED PRIOR TO THE COMPLETION OF THE REQUIRED SECOND FLUSHING, EXCEPT BY BUILDING OWNER OR OCCUPANT.
    2) PRIOR TO ISSUING A BUILDING PERMIT TO INSTALL PEX PIPE, THE BUILDING OFFICIAL SHALL REQUIRE AS PART OF THE PERMITTING PROCESS THAT THE CONTRACTOR; OR THE APPROPRIATE PLUMBING SUBCONTRACTORS, PROVIDE WRITTEN CERTIFICATION THAT HE OR SHE WILL COMPLY WITH THE FLUSHING PROCEDURES SET FORTH BY CODE.
    3) THE BUILDING OFFICIAL SHALL NOT GIVE FINAL PERMIT APPROVAL FOR ANY PEX PLUMBING INSTALLATION UNLESS HE OR SHE FINDS THAT THE MATERIAL HAS BEEN INSTALLED IN COMPLIANCE WITH THE REQUIREMENTS OF THE CODE, INCLUDING THE REQUIREMENTS TO FLUSH AND TAG THE SYSTEMS.
    4) ANY CONTRACTOR OR SUBCONTRACTOR FOUND TO HAVE FAILED TO COMPLY WITH THE PEX FLUSHING REQUIREMENTS SHALL BE SUBJECT TO THE PENALTIES IN HEALTH AND SAFETY CODE, DIVISION 13, PART 1.5, CHAPTER 6 (SECTION 17995, et seq.).

APPLICABLE CODES

- 2019 CALIFORNIA ADMINISTRATIVE CODE (CAC), CCR PART 1, TITLE 24
- 2019 CALIFORNIA BUILDING CODE (CBC), CCR TITLE 24, PARTS 1 & 2 (BASED ON THE 2018 EDITION INTERNATIONAL BUILDING CODE, VOLS. 1 & 2)
- 2019 CALIFORNIA ELECTRICAL CODE (CEC), CCR TITLE 24, PART 3 (BASED ON THE 2017 EDITION NATIONAL ELECTRICAL CODE WITH CALIFORNIA AMENDMENTS)
- 2019 CALIFORNIA MECHANICAL CODE (CMC), CCR TITLE 24, PART 4, TITLE 24 CCR (BASED ON THE 2018 EDITION UNIFORM MECHANICAL CODE WITH CALIFORNIA AMENDMENTS)
- 2019 CALIFORNIA PLUMBING CODE (CPC), CCR TITLE 24, PART 5, (BASED ON THE 2018 EDITION UNIFORM PLUMBING CODE WITH CALIFORNIA AMENDMENTS)
- 2019 CALIFORNIA ENERGY CODE (CEC), CCR TITLE 24, PART 6, AND ASSOCIATED ADMINISTRATIVE REGULATION IN PART 1.
- 2019 CALIFORNIA FIRE CODE (CFC), CCR TITLE 24, PART 9 (BASED ON THE 2018 EDITION INTERNATIONAL FIRE CODE WITH CALIFORNIA AMENDMENTS)
- 2019 CALIFORNIA EXISTING BUILDING CODE (CEBC), CCR TITLE 24, PART 10, (BASED ON THE 2018 EDITION INTERNATIONAL EXISTING BUILDING CODE WITH CALIFORNIA AMENDMENTS)
- 2019 CALIFORNIA GREEN BUILDING STANDARDS CODE (CALGreen), CCR TITLE 24, PART 11
- 2019 CALIFORNIA REFERENCED STANDARDS CODE, CCR TITLE 24, PART 12
- TITLE 19 CCR, PUBLIC SAFETY, STATE FIRE MARSHAL REGULATIONS
- 2016 ASME A17.1/CSA B44-13 SAFETY CODE FOR ELEVATORS AND ESCALATORS

NOT FOR CONSTRUCTION

STK
ALL INDUSTRIES, LLC
42095 ZEVO DR., TEMECULA, CALIFORNIA 92590-3780
Phone: 951.296.9110 Fax: 951.296.6079 Email: stk@stkinc.com

CONSULTANT:
SALAS O'BRIEN
[expect a difference]
3220 EXECUTIVE RIDGE
SUITE 210
VISTA, CA 92081
TEL: (760) 560-0100
#21189
ED | ES | SS | NP
www.salasobrien.com
E-Mail admin@tsgeng.com

PROJECT ADMINISTERED BY:
SAN BERNARDINO COUNTY
PROJECT & FACILITIES
MANAGEMENT DEPARTMENT

385 N. ARROWHEAD AVE.
SAN BERNARDINO, CA 92415

PROJECT NAME:
SAN BERNARDINO
COUNTY FIRE
DEPARTMENT:
FIRE STATION 226

PROJECT # 10.0.0.032
CIP #21-037
CAFM # SAB198
APN # 0273-011-22

1920 DEL ROSA AVE N.
SAN BERNARDINO,
CA 92404

ISSUE INFORMATION:

DATE:	INFORMATION:
04-11-2022	20% CD SET
04-28-2022	50% CD SET
06-15-2022	95% CD SET
09-16-2022	95% CD- 3rd BAY
10-03-2022	PLAN CHECK

SHEET INFORMATION:
STK PROJECT NO.: 374-154-21
SCALE: AS NOTED
DATE: JANUARY 2021
PLOT DATE: –
DRAWING NAME:

SEAL:
REGISTERED PROFESSIONAL ENGINEER
No. M29230
Exp. 3/31/23
MECHANICAL
STATE OF CALIFORNIA

SHEET TITLE:
PLUMBING
LEGEND AND
GENERAL
NOTES

SHEET NO.:
P0.1

MANDATORY CALGREEN CHECKLIST

WATER EFFICIENCY AND CONSERVATION INDOOR WATER USE	MANDATORY
5.303.1 METERS. SEPARATE METERS SHALL BE INSTALLED FOR THE USES DESCRIBED IN SECTIONS 5.303.1.1 AND 3.303.1.2. 5.303.1.1 BUILDINGS IN EXCESS OF 50,000 SQUARE FEET. SEPARATE SUBMETERS SHALL BE INSTALLED AS FOLLOWS: 1. FOR EACH INDIVIDUAL LEASED, RENTED OR OTHER TENANT SPACE WITHIN THE BUILDING PROJECTED TO CONSUME MORE THAN 100GAL/DAY. 2. WHERE SEPARATE SUBMETERS FOR INDIVIDUAL BUILDINGS TENANTS ARE UNFEASABLE, FOR WATER SUPPLIED TO THE FOLLOWING SUBSYSTEMS: a. MAKEUP WATER FOR COOLING TOWERS WHERE FLOW THROUGH IS GREATER THAN 500 GPM (30L/S) b. MAKEUP WATER FOR EVAPORATIVE COOLERS GREATER THAN 6 GPM (0.04 L/S) c. STEAM AND HOT-WATER BOILERS WITH ENERGY INPUT MORE THAN 500,000 Btu/h (147 kW) 5.303.1.2 EXCESS CONSUMPTION. ANY BUILDING OR A SPACE WITHIN A BUILDING THAT IS PROJECTED TO CONSUME MORE THAN 1,000 GAL/DAY (3800 L/DAY)	
5.303.2 20 PERCENT SAVINGS. A SCHEDULE OF PLUMBING FIXTURES AND FIXTURE FITTINGS THAT WILL REDUCE THE OVERALL USE OF POTABLE WATER WITHIN THE BUILDING BY 20 PERCENT SHALL BE PROVIDED. (CALCULATE SAVINGS BY WATER USE WORKSHEETS) 5.303.2.1 MULTIPLE SHOWERHEADS SERVING ONE SHOWER. WHEN A SHOWER IS SERVED BY MORE THAN ONE SHOWERHEAD, THE COMBINED FLOW RATE OF ALL THE SHOWERHEADS CONTROLLED BY A SINGLE VALVE SHALL NOT EXCEED THE MAXIMUM FLOW RATE AT > 20 PERCENT REDUCTION CONTAINED IN TABLE 5.303.2.3 OR THE SHOWER SHALL BE DESIGNED TO ONLY ALLOW ONE SHOWERHEAD TO BE IN OPERATION AT A TIME.	
5.303.4 WASTEWATER REDUCTION. EACH BUILDING SHALL REDUCE THE GENERATION OF WASTEWATER BY ONE OF THE FOLLOWING METHODS: 1. THE INSTALLATION OF WATER-CONSERVING FIXTURES OR 2. UTILIZING NONPOTABLE WATER SYSTEMS.	
5.303.6 PLUMBING FIXTURES AND FITTINGS. PLUMBING FIXTURES (WATER CLOSETS AND URINALS) AND FITTINGS (FAUCETS AND SHOWERHEADS) SHALL COMPLY WITH THE REQUIREMENTS LISTED FOR EACH TYPE IN ITEMS LISTED IN TABLE 5.303.6. 1. WATER CLOSETS (TOILETS) – FLUSHOMETER TYPE 2. WATER CLOSETS (TOILETS) – TANK TYPE 3. URINALS 4. PUBLIC LAVATORY FAUCETS 5. PUBLIC METERING SELF-CLOSING FAUCETS 6. RESIDENTIAL BATHROOM LAVATORY SINK FAUCETS 7. RESIDENTAL KITCHEN FAUCETS 8. RESIDENTIAL SHOWER HEADS 9. SINGLE SHOWER FIXTURES SERVED BY MORE THAN ONE SHOWERHEAD	

WATER REDUCTION FIXTURE FLOW RATES

PER 2019 CALIFORNIA GREEN BUILDING CODE – TABLE A5.303.2.3.1

FIXTURE TYPE	MAXIMUM FLOW RATE
KITCHEN FAUCETS	1.8 GPM AT 60 PSI
WASH FOUNTAINS	1.8 [RIM SPACE (IN.)/20 GPM AT 60 PSI]
METERING FAUCETS	0.20 GALLONS/CYCLE
METERING FAUCETS FOR WASH FOUNTAINS	0.20 GALLONS/CYCLE/20 [RIM SPACE (IN.)@ 60 PSI]

EACH PLUMBING FIXTURE AND FITTING SHALL MEET THE FLOW RATE SPECIFIED IN 2019 CAL GREEN TABLE A5.303.2.3.1

WATER CONSERVATION FIXTURE FLOW RATES

PER 2019 CALIFORNIA GREEN BUILDING CODE SECTION 5.303.3

FIXTURE TYPE	MAXIMUM BASELINE FLOW RATE
WATER CLOSETS	1.28 GALLONS PER FLUSH
URINALS (FLOOR-MOUNT/WALL-MOUNT)	0.5/0.125 GALLONS PER FLUSH
SHOWERHEADS	1.8 GPM AT 80 PSI

PLUMBING FIXTURES (WATER CLOSETS AND URINALS) AND FITTINGS (FAUCETS AND SHOWERHEADS) SHALL COMPLY WITH 5.303.3.

PLUMBING FIXTURES AND FIXTURE FITTINGS

PER 2019 CALIFORNIA PLUMBING CODE – TABLE 1701.1

	REQUIRED STANDARDS
WATER CLOSETS (TOILETS) – FLUSHOMETER VALVE TYPE SINGLE FLUSH, MAXIMUM FLUSH VOLUME	ASME A 112.19.2/CSA B45.1 – 1.28 GPF (4.8 L)
WATER CLOSETS (TOILETS) – FLUSHOMETER VALVE TYPE DUAL FLUSH, MAXIMUM FLUSH VOLUME	ASME A 112.19.2 AND USEPA WATERSENSE TANK-TYPE HIGH-EFFICIENCY TOILET SPECIFICATION – 1.28 GPF (4.8 L)
WATER CLOSETS (TOILETS) – TANK TYPE	U.S. EPA WATERSENSE TANK-TYPE HIGH EFFICIENCY TOILET SPECIFICATION
URINALS, MAXIMUM FLUSH VOLUME	ASME A 112.19.2/CSA B45.1 – 0.5 GPF (1.9 L)
URINALS, NONWATER URINALS	ASME A 112.19.19 (VITREOUS CHINA) ANSI Z124.9–2004 OR IAPMO Z124.9 (PLASTIC)
PUBLIC LAVATORY FAUCETS: MAXIMUM FLOW RATE – 0.5 GPM (1.9 L/MIN.)	ASME A 112.18.1/CSA B125.1
PUBLIC METERING SELF-CLOSING FAUCETS: MAXIMUM FLOW RATE – 0.25 (1.0 L) PER METERING CYCLE	ASME A 112.18.1/CSA B125.1
RESIDENTIAL BATHROOM LAVATORY SINK FAUCETS: MAXIMUM FLOW RATE – 1.5 GPM (5.7L/MIN)	ASME A 112.18.1/CSA B125.1

PLUMBING FIXTURES (WATER CLOSETS AND URINALS) AND FITTINGS (FAUCETS AND SHOWERHEADS) SHALL MEET THE STANDARDS REFERENCED IN TABLE 5.303.6.

PLUMBING PIPE MATERIAL SCHEDULE

SERVICE	LOCATION	PIPE MATERIAL	SLOPE
WATER	ABOVE GRADE	ASTM B88 TYPE "L" HARD DRAWN COPPER WITH WROUGHT COPPER FITTINGS.	1/32" PER 1'
	BELOW GRADE	ASTM B88 TYPE "K" HARD DRAWN COPPER, FACTORY INSULATED, WITH WROUGHT COPPER FITTINGS.	1/32" PER 1'
SEWER AND VENT	ABOVE GRADE	ASTM A888 SERVICE WEIGHT CAST IRON PIPE AND DWV FITTINGS SHALL CONFORM TO CPC AND BEAR THE COLLECTIVE TRADEMARK OF CISPI AND NSF.	1/4" PER 1'
	BELOW GRADE	ABS SCHEDULE 40 PIPE AND DWV FITTINGS SHALL CONFORM TO ASTM D2321–2000 AND CPC.	1/4" PER 1'
NATURAL GAS	ABOVE GRADE	ASTM A53 SCHEDULE 40 GALVANIZED STEEL "BLACK" PIPE AND FITTINGS SHALL CONFORM TO CPC. EXPOSED PIPING SHALL BE PAINTED.	1/4" PER 15'
	BELOW FLOOR (INTERIOR)	ASTM A53 SCHEDULE 40 GALVANIZED STEEL "BLACK" PIPE AND FITTINGS SHALL CONFORM TO CPC. PIPING INSTALLED UNDERGROUND BENEATH BUILDING SHALL CONFORM TO CPC 1210.1.6.	1/4" PER 15'
	BELOW GRADE (EXTERIOR)	ASTM D2513–16a POLYETHYLENE "PE" PIPE. ALL FITTINGS SHALL BE AS PER CPC.	1/4" PER 15'
CONDENSATE	ABOVE GRADE	ASTM B88 TYPE "L" HARD DRAWN COPPER WITH WROUGHT COPPER FITTINGS.	1/4" PER 1'

PIPE INSULATION THICKNESS

PER 2019 CALIFORNIA ENERGY CODE TABLE 120.3–A

FLUID OPERATING TEMPERATURE RANGE (°F)	INSULATION CONDUCTIVITY: CONDUCTIVITY (IN BTU–IN/H PER SQ. FT² °F)	INSULATION CONDUCTIVITY: MEAN RATING TEMPERATURE (°F)		NOMINAL PIPE DIAMETER(INCHES): <1	1 – < 1.5	1.5 – < 4	4 – < 8	8 AND LARGER
				INSULATION THICKNESS REQUIRED (IN INCHES)				
SPACE HEATING, SERVICE WATER HEATING SYSTEMS (STEAM, STEAM CONDENSATE, REFRIGERANT, SPACE HEATING, SERVICE HOT WATER)				MINIMUM PIPE INSULATION REQUIRED (THICKNESS IN INCHES OR R–VALUE)				
ABOVE 350	0.32 – 0.34	250	INCHES	4.5	5.0	5.0	5.0	5.0
			R–VALUE	R37	R41	R37	R27	R23
251–350	0.29 – 0.31	200	INCHES	3.0	4.0	4.5	4.5	4.5
			R–VALUE	R24	R34	R35	R26	R22
201–250	0.27 – 0.30	150	INCHES	2.5	2.5	2.5	3.0	3.0
			R–VALUE	R21	R20	R17.5	R17	R14.5
141–200	0.25 – 0.29	125	INCHES	1.5	1.5	2.0	2.0	2.0
			R–VALUE	R11.5	R11	R14	R11	R10
105–140	0.22 – 0.28	100	INCHES	1.0	1.5	1.5	1.5	1.5
			R–VALUE	R7.7	R12.5	R11	R9	R8
				NOMINAL PIPE DIAMETER(INCHES): <=1	1 – < 1.5	1.5 – < 4	4 – < 8	8 <
SPACE COOLING SYSTEMS (CHILLED WATER, REFRIGERANT AND BRINE)				MINIMUM PIPE INSULATION REQUIRED (THICKNESS IN INCHES OR R–VALUE)				
40–60	0.21 – 0.27	75	INCHES	NONRES 0.5 / RES 0.5	NONRES 0.5 / RES 0.5	1.0	1.0	1.0
			R–VALUE	R3 / R6	R3 / R5			
BELOW 40	0.20 – 0.26	50	INCHES	1.0	1.5	1.5	1.5	1.5
			R–VALUE	R8.5	R14	R12	R10	R9

FIXTURE DATA

SYMBOL	DESCRIPTION	DOMESTIC WATER: NO. OF UNITS	F.U. PER UNIT (1)	TOTAL FIXTURE UNITS: CW	TOTAL FIXTURE UNITS: HW	SEWER: NO. OF UNITS	F.U. PER UNIT (2)	TOTAL FIXTURE UNITS
WB 1	CLOTHES WASHER SUPPLY BOX	1	4.0	4.0	3.0	1	3.0	3.0
DW 1	DISHWASHER	1	1.5	1.5	1.1	1	--	--
EX 1	EXTRACTOR	1	4	4.0	3.0	1	4.0	4.0
HB 1	HOSE BIBB	1	2.5	2.5	--	1	--	--
HB 1	ADDITIONAL HOSE BIBB	7	1.0	7.0	--	7	--	--
L 1 / L 2	LAVATORY	5	1.0	5.0	3.8	5	1.0	5.0
BS 1	BAR SINK	1	2.0	2.0	1.5	1	2.0	2.0
KS 1	KITCHEN SINK	1	1.5	1.5	1.1	1	2.0	2.0
LS 1 / LS 2	LAUNDRY SINK	2	1.5	3.0	2.3	2	2.0	4.0
MS 1	SERVICE/MOP BASIN SINK	1	3.0	3.0	2.3	1	3.0	3.0
SH 1	SHOWER	5	2.0	10.0	7.5	5	2.0	10.0
WC 1 / WC 2	WATER CLOSET (TANK)	5	2.5	12.5	--	5	4.0	20.0
IM 1	ICE MAKER	3	0.5	1.5	--	--	--	--
FD 1 / AD 1	FLOOR DRAIN	11	--	--	--	11	--	--
FS 1	FLOOR SINK	3	--	--	--	3	--	--
	TOTAL			57.5	25.5			53.0

(1) WATER FIXTURE UNITS PER CPC TABLE A 103.1 (2) SEWER FIXTURE UNITS PER CPC TABLE 702.1

WATER CALCULATIONS

DOMESTIC COLD WATER PRESSURE CALCULATION (AVG PSI / 100 FT)

RESIDUAL PRESSURE PER CONVERSATION WITH JASON WOLF AT EAST VALLEY WATER DISTRICT, (909)888.8986 ON 05/17/2022. AVAILABLE WATER PRESSURE IS 85 PSI. CONTRACTOR TO FIELD VERIFY STREET WATER PRESSURE PRIOR TO START OF WORK. IN CASE OF ANY DISCREPANCIES NOTIFY ARCHITECT/ENGINEER PRIOR TO START OF WORK.			
MAX. SYSTEM INLET PRESSURE [AT WATER METER INLET]	=	85	PSI
MIN. SYSTEM INLET PRESSURE [AT PRESSURE REDUCING VALVE INLET]	=	80	PSI
SYSTEM PRESSURE LOSSES			
1 1/2" WATER METER @ 32 GPM	=	1.3	PSI
1 1/2" BACKFLOW PREVENTER @ 32 GPM	=	13	PSI
1 1/2" PRESSURE REDUCING VALVE @ 32 GPM	=	5	PSI
TOTAL OF SYSTEM PRESSURE LOSSES		19.3	PSI
RESIDUAL PRESSURE AT PRV		60.7	
PRESSURE REDUCING VALVE SETPOINT	=	60	PSI
STATIC HEIGHT PRESSURE LOSS (25' x .433)	=	10.8	PSI
RESIDUAL PRESSURE REQUIRED AT GOVERNING FIXTURE [WATER CLOSET 25 PSI]	=	25	PSI
TOTAL SYSTEM PRESSURE LOSSES (DOWNSTREAM OF PRV)	=	35.8	PSI
PRESSURE AVAILABLE FOR PIPE SIZING			
(PRV SETPOINT – TOTAL SYSTEM PRESSURE LOSSES DOWNSTREAM OF PRV)	=	24.2	PSI
ACTUAL LENGTH OF SYSTEM	=	515	FT
DEVELOPED LENGTH OF SYSTEM (515' X 1.5)	=	773	FT
AVERAGE PRESSURE DROP			
(PRESSURE AVAILABLE FOR PIPE SIZING) X 100 FT / (DEVELOPED LENGTH OF SYSTEM)	(24.2PSI	x100	/ 773)
	=	3.1	PSI/100 FT AVG
SUMMARY			
PIPE SIZING BASED UPON 3.1 PSI LOSS PER 100' AVG			

DOMESTIC COLD WATER SIZING

FRICTION LOSS 3.0 PSI PER 100 FT AVG, AT 8 FPS MAX. VELOCITY

PIPE SIZE	WSFU: FLUSH TANK	WSFU: FLUSH VALVE	GPM	FPS
1/2"	0	–	1	2.4
3/4"	4	–	4	3.2
1"	12	–	9	3.8
1–1/4"	24	–	17	4.5
1–1/2"	46	10	27	5.0
2"	155	63	56	6.2
2–1/2"	380	245	100	7.2
3"	665	596	155	8.0

DOMESTIC HOT WATER SIZING

FRICTION LOSS 3.0 PSI PER 100 FT AVG, AT 5 FPS MAX. VELOCITY

PIPE SIZE	WSFU: FLUSH TANK	WSFU: FLUSH VALVE	GPM	FPS
1/2"	0	–	1	2.4
3/4"	4	–	4	3.2
1"	12	–	9	3.8
1–1/4"	24	–	17	4.5
1–1/2"	46	–	27	5.0
2"	119	–	48	5.0

NOT FOR BID

STK
42095 ZEVO DR., TEMECULA, CALIFORNIA 92590-3780
Phone: 951.296.9110 Fax: 951.296.6079 Email: stk@stknc.com

CONSULTANT:

SALASO'BRIEN
[expect a difference]
3220 EXECUTIVE RIDGE
SUITE 210
VISTA, CA 92081
TEL: (760) 560-0100
#21189
www.salasobrien.com
E-Mail admin@tsgeng.com
ED | ES | SS | NP

PROJECT ADMINISTERED BY:
SAN BERNARDINO COUNTY
PROJECT & FACILITIES
MANAGEMENT DEPARTMENT

385 N. ARROWHEAD AVE.
SAN BERNARDINO, CA 92415

PROJECT NAME:
SAN BERNARDINO
COUNTY FIRE
DEPARTMENT:
FIRE STATION 226

PROJECT # 10.0.0.032
CIP #21-037
CAFM # SAB198
APN # 0273-011-22

1920 DEL ROSA AVE N.
SAN BERNARDINO,
CA 92404

ISSUE INFORMATION:

DATE:	INFORMATION:
04-11-2022	20% CD SET
04-28-2022	50% CD SET
06-15-2022	95% CD SET
09-16-2022	95% CD- 3rd BAY
10-03-2022	PLAN CHECK

SHEET INFORMATION:
STK PROJECT NO.: 374-154-21
SCALE: AS NOTED
DATE: JANUARY 2021
PLOT DATE: –
DRAWING NAME:

SEAL:

SHEET TITLE:
PLUMBING
SCHEDULES &
CALCULATIONS

SHEET NO.:
P0.2

GAS FIRED WATER HEATER SCHEDULE

SYMBOL	MANUFACTURER & MODEL NO.	LOCATION	SERVICE	STORAGE (GAL.)	MBH	RECOVERY @ 90°ΔT (GPH)	INLET TEMP °F	OUTLET TEMP °F	WEIGHT (LBS.)	THERMAL EFFICIENCY %	REMARKS
WH 1	A.O.SMITH BTH-250 MXI	JANITOR'S ROOM	DOMESTIC HOT WATER	100	250	323	50°	140°	1360	98	1 2 3 4 5 6 7 8

1. APPROVED FOR USE IN CALIFORNIA LOW NOX TYPE.
2. FULLY AUTOMATIC CONTROLS WITH SAFETY SHUTOFF.
3. DIRECT VENT WATER HEATER. 3" PVC PIPE FOR VENTING AND AIR INTAKE. VERIFY SIZE WITH MANUFACTURER PRIOR TO START OF WORK.
4. PROVIDE CONDENSATE NEUTRALIZATION KIT.
5. FOR DETAILS SEE 7/P5.1.
6. PROVIDE MANUFACTURER'S VERTICAL FLUE CONDENSATE DRAIN CONNECTION.
7. PROVIDE EXPANSION TANK PER MANUFACTURER'S RECOMMENDATIONS.
8. WATER HEATER RATED FOR INDOOR USE.

PLUMBING FIXTURE SCHEDULE

SYMBOL	FIXTURE	MIN. PIPE SIZE CW	HW	V	S	DESCRIPTION
WC 1	WATER CLOSET (TANK TYPE)	3/4"	--	2"	4"	AMERICAN STANDARD "CADET 3 FLOWISE" #2833.128 ELONGATED TOILET. 1.28 GPF, WHITE VITREOUS CHINA. SEAT: OLSONITE #95SSC. OPEN FRONT SEAT LESS COVER.
WC 2	WATER CLOSET (TANK TYPE, ADA)	3/4"	--	2"	4"	AMERICAN STANDARD "CADET RIGHT HEIGHT" #2835.128 ELONGATED TOILET. 1.28 GPF, WHITE VITREOUS CHINA, ADA. LOCATE ACTUATOR AS PER ADA. SEAT: OLSONITE #95SSC. OPEN FRONT SEAT LESS COVER.
L 1	LAVATORY (COUNTERTOP, ADA)	3/4"	3/4"	1-1/2"	2"	AMERICAN STANDARD "AQUALYN" #0476.028 LAVATORY. VITREOUS CHINA, SELF-RIMMING, FRONT OVERFLOW. FAUCET: CHICAGO FAUCET #2200-4E39-VPABCP SINGLE HANDLE, DECK MOUNTED WITH 0.35 GPM AERATOR AND POINT-OF-USE TMV. PROVIDE "LAV-GUARD 2" P-TRAP COVER.
L 2	LAVATORY (WALL MOUNT, ADA)	3/4"	3/4"	1-1/2"	2"	AMERICAN STANDARD "LUCERNE" #0355.012 LAVATORY. VITREOUS CHINA, FRONT OVERFLOW, FAUCET LEDGE. FAUCET: CHICAGO FAUCET #2200-4E39-VPABCP SINGLE HANDLE, DECK MOUNTED WITH 0.35 GPM AERATOR AND POINT-OF-USE TMV. PROVIDE "LAV-GUARD 2" P-TRAP COVER.
SH 1	SHOWER	3/4"	3/4"	1-1/2"	2"	"AMERICAN STANDARD" #T662.213 FLOWISE 1.5 GPM COMMERICAL SHOWER SYSTEM WITH HAND SHOWER AND FIXED SHOWERHEAD, IN-LINE VACUUM BREAKER, METAL HOSE, SLIDE BAR, 2-WAY DIVERTER VALVE AND HANDLE.
KS 1	KITCHEN SINK	3/4"	3/4"	1-1/2"	2"	JUST MANUFACTURING #DL-1933-A-GR SINK. TYPE 304, 18 GAUGE STAINLESS STEEL, SELF-RIMMING,4" CENTERS. FAUCET: MOEN "SALORA" #CA7570C SINGLE HANDLE, CHROME PULLOUT FAUCET.
FS 1	FLOOR SINK	--	--	1-1/2"	2"	ZURN. ZN1900-P-2. CAST IRON BODY WITH SQUARE SLOTTED LIGHT-DUTY 1/2 GRATE WITH PORCELAIN ENAMEL INTERIOR AND TOP WITH INTERIOR BOTTOM DOME STRAINER AND TRAP PRIMER CONNECTION.
FD 1	FLOOR DRAIN	--	--	1-1/2"	2"	ZURN #ZN415B-P-Y. CAST IRON BODY WITH BOTTOM OUTLET, COMBINATION INVERTIBLE MEMBRANE CLAMP AND COLLAR WITH NICKEL BRONZE STRAINER, TRAP PRIMER CONNECTION AND SEDIMENT BUCKET.
SHD 1	SHOWER DRAIN	--	--	1-1/2"	2"	ZURN #FD2260. SHOWER STALL DRAIN. ABS BODY WITH BOTTOM OUTLET, GASKET SEAL AND STAINLESS STEEL ROUND STRAINER.
AD 1	AREA DRAIN	--	--	2"	4"	ZURN #ZN415S-HD-P. CAST IRON BODY WITH BOTTOM OUTLET, COMBINATION INVERTIBLE MEMBRANE CLAMP AND COLLAR WITH HEAVY DUTY TRAFFIC RATED GRATE, AND TRAP PRIMER CONNECTION.
HB 1	HOSE BIBB	3/4"	--	--	--	ZURN #Z1305-VB N-N-FREEZE WALL HYDRANT. ENCASED HYDRANT WITH BRONZE BODY, ALL BRONZE INTERIOR PARTS, KEY OPERATED CONTROL VALVE, STAINLESS STEEL BOX WITH HINGED COVER WITH LOCK.
HB 2	HOSE BIBB	3/4"	--	--	--	ZURN #Z1395-VB NON-FREEZE YARD HYDRANT. EXPOSED HYDRANT WITH CAST IRON HEAD AND LIFT HANDLE, BRONZE INTERIOR PARTS, GALVANIZED STEEL CASING WITH BRONZE VALVE HOUSING, DRAIN PORT.
MS 1	MOP SINK	3/4"	3/4"	2"	3"	CECO #871 CORNER SERVICE SINK. FAUCET: AMERICAN STANDARD #8344.112 EXPOSED YOKE WALL-MOUNT UTILITY FAUCET. PROVIDE CECO B71-3" DRAIN AND B-872 COATED WIRE RIM GUARD.
LS 1	LAUNDRY SINK	3/4"	3/4"	2"	3"	CUSTOM FREE STANDING TYPE 304, 14 GAUGE STAINLESS STEEL, WITH DRAINBOARD AND LEGS. SINK DIM. 24" X 18" X 12" DEEP. OVERALL DIMENSION 24" FRONT TO BACK X 63" LONG 36" HIGH W/12" BACKSPLASH FAUCET: CHICAGO #509-GCLP WALL MOUNTED POT FILLER WITH SPRAY VALVE.
LS 2	LAUNDRY SINK	3/4"	3/4"	1 1/2"	2"	WALL HUNG. JUST MANUFACTURING DRAWING A-18664. TYPE 304, 14 GAUGE STAINLESS STEEL. FAUCET: JS-47-TGSA.
BS 1	BAR SINK	3/4"	3/4"	1 1/2"	2"	UST MODEL# SL-ADA-17519-A-GR LEDGE TYPE, TOP MOUNT SS TYPE 304, 18-8. FAUCET: MOEN MODEL METHOD #7585 SERIES. SINGLE LEVER TYPEPULLOUT SPOUT.
EX 1	EXTRACTOR	3/4"	3/4"	2	3	WASHER-EXTRACTOR B&C TECHNOLOGIES MODEL HE-65.
WB 1	CLOTHES WASHER SUPPLY BOX	3/4"	3/4"	1 1/2"	2"	GUY GRAY #82048 SUPPLY BOX. HOT DIPPED GALVANIZED STEEL, 20 GAUGE FACEPLATE, 18 GAUGE BOX. HAMMER ARRESTER VALVES, MALE THREADED DRAIN FITTING.
IM 1	ICE MAKER SUPPLY BOX	1/2"	--	--	--	GUY GRAY #BIM875AB SUPPLY BOX. HOT DIPPED GALVANIZED STEEL, 20 GAUGE FACEPLATE, 18 GAUGE BOX.
DW 1	DISHWASHER	--	3/4"	--	--	REFER TO ARCHITECTURAL SPECIFICATION.

PLUMBING EQUIPMENT SCHEDULE

TAG	EQUIPMENT	LOCATION	MANUFACTURER	MODEL	REMARKS
WHA 1	WATER HAMMER ARRESTOR	VARIES	MIFAB	HAMMERGARD MWH SERIES	PROVIDE WITH APPROVED ACCESS PANEL. SEE DETAIL 11/P5.1.
TP 1	TRAP PRIMER	VARIES	MIFAB	M2-500	PROVIDE WITH MI-DU 4-WAY DISTRIBUTION UNIT (IF APPLICABLE), PROVIDE WITH APPROVED ACCESS PANEL. SEE DETAIL 1/P5.2.
WF 1	WATER FILTER	FOR ICE MACHINE	ICE-O-MATIC	IFQ1	1000 LBS OF ICE/DAY, 1.5 GPM, 125 MAX PSI, 100°F MAX, 0.5 MICRON FILTER 5 LBS., QUARTER TURN CARTRIDGE, NSF CERTIFIED.
TV 1	TEMPERING VALVE	JANITOR'S ROOM	POWERS	1432-RB	INSTALL PER MANUFACTURER'S INSTRUCTION'S.
CP 1	CIRCULATION PUMP	JANITOR'S ROOM	TACO	113	1/8 HP, 115 V, 60HZ, 1ø, 27 LBS. INSTALL PER MANUFACTURER'S INSTRUCTIONS. PROVIDE AQUASTAT.
ET 1	EXPANSION TANK	JANITOR'S ROOM	AMTROL	THERM-X-TROL ST-12	SIZED PER MANUFACTURER'S RECOMMENDATIONS.
CA 1	AIR COMPRESSOR	AIR COMPRESSOR ROOM	INGERSOLL -RAND	2340N5-V	80 GAL VERT RECEIVER. 5HP, 2 STAGE COMPRESSOR, 14.0 CFM AT 175 PSIG MAX, LOW LEVEL SWITCH, AIR COOLED AFTER COOLED, ELECTRIC TANK DRAIN, MAGNETIC STARTER, START UP KIT, 208V, 3ø.
GD 1	GARBAGE DISPOSAL	KITCHEN	IN-SINK-ERATOR	BADGER 5	1/2 HP, 120 V, 60HZ, 1725 RPM, 12-5/8" HEIGHT, 20 LBS. INSTALL PER MANUFACTURER'S INSTRUCTIONS.
OI 1	OIL INTERCEPTOR	DRIVEWAY (B/G)	JENSEN PRE-CAST	PC C-750	750 GALLON OIL INTERCEPTOR. PROVIDE TRAFFIC RATED HEAVY DUTY CAST IRON FRAME AND COVERS WITH GAS TIGHT GASKETS. SEE DETAIL 10/P5.1 FOR SIZING CALCULATION.
GO 1	GAS OUTLET BOX	VARIES	GUY GRAY	MGB1	20 GAUGE BOX AND FACEPLATE, WHITE POWDER COAT ON COLD ROLLED STEEL.
RPBA 1	REDUCED PRESSURE BACKFLOW PREVENTER	VARIES	WILKINS	375XL	LINE SIZED LEAD-FREE REDUCED PRESSURE BACKFLOW PREVENTER.
PRV 1	PRESSURE REDUCING VALVE	PER PLAN	WILKINS	500 XL SERIES	LOCATED IN YARDBOX WITH BUILDING SHUT-OFF VALVE.
AGV 1	AUTOMATIC GAS SHUT-OFF VALVE	KITCHEN	JEFFERSON SOLENOID	1332	LINE SIZED. NORMALLY OPEN OPERATION. AUTOMATICALLY CLOSES WHEN SIGNAL IS RECEIVED AND MANUALLY OPEN AND RESET ONLY WHEN SIGNAL IS OFF. VALVE SHALL BE INTERLOCKED WITH CALL-IN DISPATCH RADIO FOR SHUT-OFF UPON ACTIVATION. FOR INTERLOCKING, SEE ELECTRICAL DRAWINGS.

NOT FOR BID

STK
42095 ZEVO DR., TEMECULA, CALIFORNIA 92590-3780
Phone: 951.296.9110 Fax: 951.296.6079 Email: stk@stkinc.com

CONSULTANT:
SALASO'BRIEN
[expect a difference]
3220 EXECUTIVE RIDGE
SUITE 210
VISTA, CA 92081
TEL: (760) 560-0100
#21189
ED | ES | SS | NP
www.salasobrien.com
E-Mail admin@tsqeng.com

PROJECT ADMINISTERED BY:
SAN BERNARDINO COUNTY
PROJECT & FACILITIES
MANAGEMENT DEPARTMENT

385 N. ARROWHEAD AVE.
SAN BERNARDINO, CA 92415

PROJECT NAME:
SAN BERNARDINO
COUNTY FIRE
DEPARTMENT:
FIRE STATION 226

PROJECT # 10.10.10.32
CIP #21-037
CAFM # SAB198
APN # 0273-011-22

1920 DEL ROSA AVE N.
SAN BERNARDINO,
CA 92404

ISSUE INFORMATION:

DATE:	INFORMATION:
04-11-2022	20% CD SET
04-28-2022	50% CD SET
06-15-2022	95% CD SET
09-16-2022	95% CD- 3rd BAY
10-03-2022	PLAN CHECK

SHEET INFORMATION:
STK PROJECT NO.: 374-154-21
SCALE: AS NOTED
DATE: JANUARY 2021
PLOT DATE: –
DRAWING NAME:

SEAL:
REGISTERED PROFESSIONAL ENGINEER
No. M29230
Exp. 3/31/23
MECHANICAL
STATE OF CALIFORNIA

SHEET TITLE:
PLUMBING
SCHEDULES

SHEET NO.:
P0.3

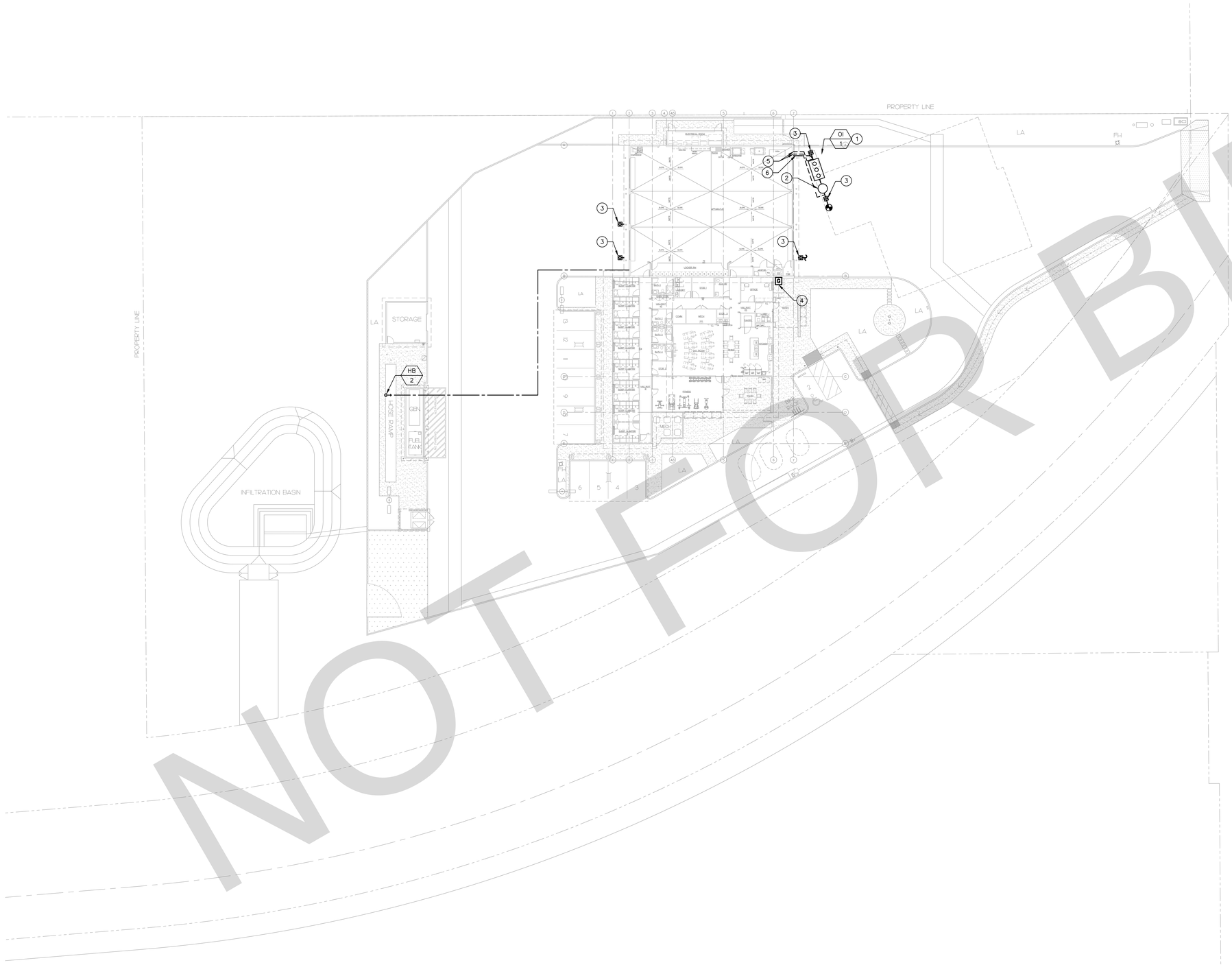

NOT FOR BID

PLUMBING SITE PLAN 1

1" = 20'-0"

GENERAL NOTES

A. CONTRACTOR SHALL FIELD VERIFY EXACT LOCATION OF ALL PIPING AND UTILITIES PRIOR TO START OF WORK. IN THE EVENT OF ANY DISCREPANCIES OR POTENTIAL CONFLICTS, NOTIFY THE ARCHITECT AND ENGINEER IN WRITING PRIOR TO START OF WORK.

B. ALL PIPING LOCATIONS ARE DIAGRAMMATIC. CONTRACTOR SHALL COORDINATE WITH ALL TRADES AND OWNER'S REPRESENTATIVE AND VERIFY EXACT ROUTING PRIOR TO START OF WORK.

C. VERIFY EXACT SIZE AND LOCATION OF ALL PLUMBING CONNECTIONS TO MECHANICAL EQUIPMENT PRIOR TO START OF WORK. IN NO CASE SHALL THE CONNECTION SIZE BE LARGER THAN THE BRANCH PIPING SIZE.

KEY NOTES

1. 750 GALLON CLARIFIER. SEE DETAIL _/P5.1.
2. 24" SAMPLING BOX. PROVIDE HEAVY DUTY TRAFFIC-RATED COVER.
3. GRADE CLEAN OUT. SEE DETAIL 2/P3.1.
4. PROPOSED GAS METER LOCATION. OBTAIN APPROVAL FROM GAS UTILITY COMPANY PRIOR TO INSTALLATION.
5. 2" VENT IN WALL UP TO CEILING.
6. 4" OILE OW TO CLARIFIER.

FINISHED FLOOR ELEVATION: 1160

UPSTREAM MANHOLE INVERT ELEVATION: 44.50
CONTRACTOR SHALL FIELD VERIFY EXACT ELEVATION PRIOR TO START OF WORK. IN CASE OF ANY DISCREPANCIES OR POTENTIAL CONFLICTS, INFORM THE ARCHITECT AND ENGINEER IN WRITING BEFORE PROCEEDING FURTHER.

BACKWATER VALVE NOT REQUIRED.

STK
42065 ZEVO DR., TEMECULA, CALIFORNIA 92590-3780
Phone: 951.296.9110 Fax: 951.296.6079 Email: stk@stkinc.com

CONSULTANT:

SALASO'BRIEN
[expect a difference]
3220 EXECUTIVE RIDGE
SUITE 210
VISTA, CA 92081
TEL: (760) 560-0100
#21189
ED | ES | SS | NP
www.salasobrien.com
E-Mail admin@tsqeng.com

PROJECT ADMINISTERED BY:
SAN BERNARDINO COUNTY
PROJECT & FACILITIES
MANAGEMENT DEPARTMENT

385 N. ARROWHEAD AVE.
SAN BERNARDINO, CA 92415

PROJECT NAME:

SAN BERNARDINO
COUNTY FIRE
DEPARTMENT:

FIRE STATION 226

PROJECT # 10.10.10.032

CIP #21-037

CAFM # SAB198

APN # 0273-011-22

1920 DEL ROSA AVE N.
SAN BERNARDINO,
CA 92404

ISSUE INFORMATION:

DATE:	INFORMATION:
04-11-2022	20% CD SET
04-28-2022	50% CD SET
06-15-2022	95% CD SET
09-16-2022	95% CD- 3rd BAY
10-03-2022	PLAN CHECK

SHEET INFORMATION:

STK PROJECT NO.: 374-154-21
SCALE: AS NOTED
DATE: JANUARY 2021
PLOT DATE: –
DRAWING NAME:

SEAL:

REGISTERED PROFESSIONAL ENGINEER
RODNEY J. TAYLOR
No. M29230
Exp. 3/31/23
MECHANICAL
STATE OF CALIFORNIA

SHEET TITLE:

PLUMBING
SITE PLAN

SHEET NO.:

P1.1

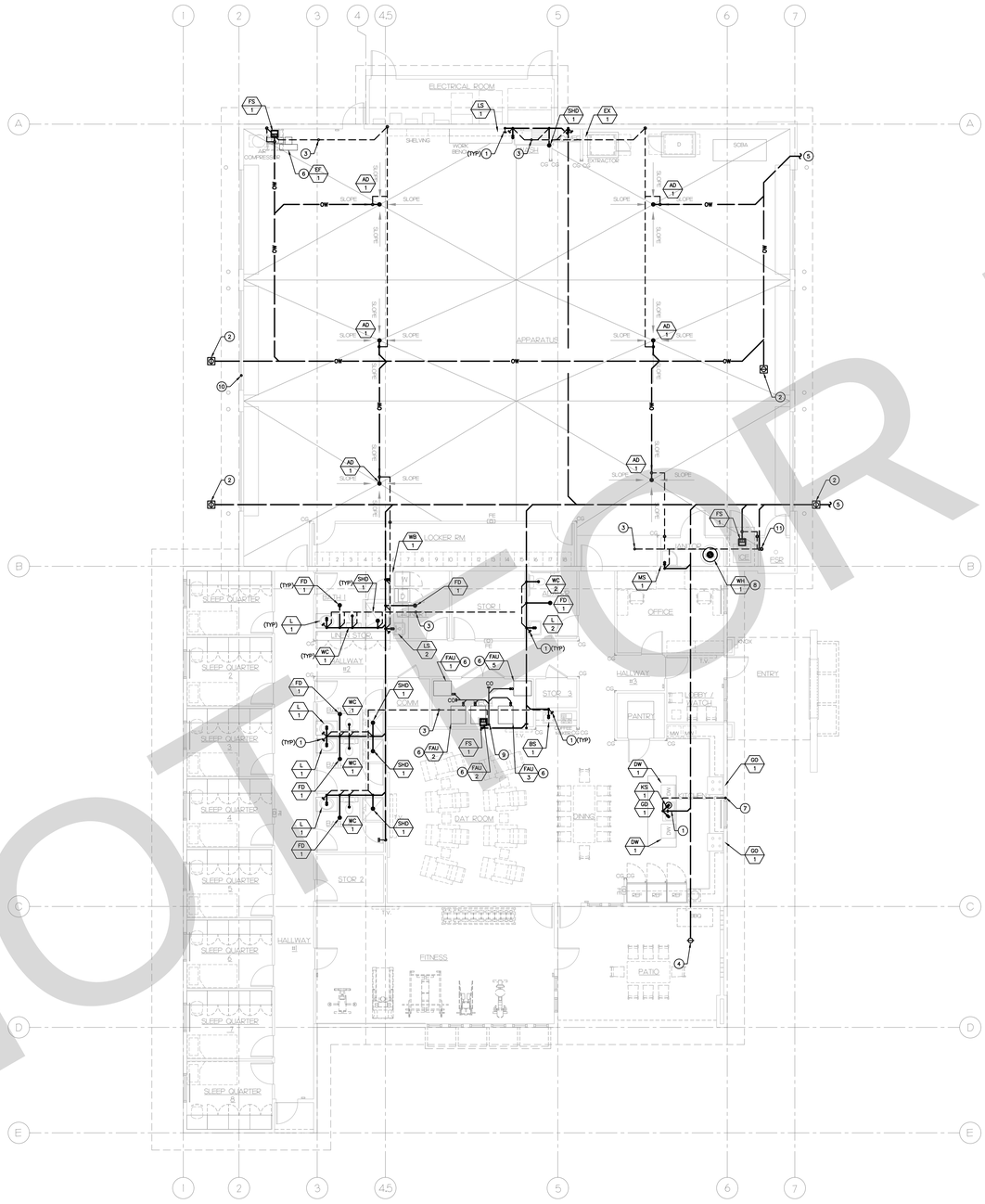

PLUMBING FLOOR PLAN - SEWER & VENT 1

1/8" = 1'-0"

GENERAL NOTES

A. CONTRACTOR SHALL FIELD VERIFY EXACT LOCATION OF ALL PIPING AND UTILITIES PRIOR TO START OF WORK. IN THE EVENT OF ANY DISCREPANCIES OR POTENTIAL CONFLICTS, NOTIFY THE ARCHITECT AND ENGINEER IN WRITING PRIOR TO START OF WORK.

B. ALL PIPING LOCATIONS ARE DIAGRAMMATIC. CONTRACTOR SHALL COORDINATE WITH ALL TRADES AND OWNER'S REPRESENTATIVE AND VERIFY EXACT ROUTING PRIOR TO START OF WORK.

C. VERIFY EXACT SIZE AND LOCATION OF ALL PLUMBING CONNECTIONS TO MECHANICAL EQUIPMENT PRIOR TO START OF WORK. IN NO CASE SHALL THE CONNECTION SIZE BE LARGER THAN THE BRANCH PIPING SIZE.

KEY NOTES

1. WALL CLEAN OUT. SEE DETAIL 4/P5.1.
2. HEAVY DUTY TRAFFIC RATED GRADE CLEAN OUT. SEE DETAIL 5/P5.1.
3. VENT THRU ROOF. SEE DETAIL 1/P5.1.
4. FLOOR CLEAN OUT. SEE DETAIL 5/P5.1.
5. FOR CONTINUATION, SEE P1.1.
6. MECHANICAL UNIT SHOWN FOR REFERENCE ONLY. SEE MECHANICAL PLANS FOR EXACT LOCATION. ROUTE CONDENSATE DRAIN DOWN TO FLOOR SINK. SEE DETAIL 2/P5.2.
7. VENT UP FROM BELOW FLOOR THRU ROOF. SEE DETAIL 1/P5.1.
8. ROUTE WATER HEATER PTR AND DRAIN PIPING TO MOP SINK. TERMINATE AT MIN. 1" AIR GAP ABOVE FIXTURE RIM.
9. ROUTE 3/4" CONDENSATE/EQUIPMENT DRAIN WITH INSULATION DOWN IN WALL TO FLOOR SINK. TERMINATE AT MIN. 1" AIR GAP ABOVE FIXTURE RIM. SEE DETAIL 2/5.2.
10. VENT FROM OIL INTERCEPTOR UP THRU ROOF.
11. SPRINKLER RISER HUB DRAIN. SEE DETAIL 3/P5.1.

NOT FOR BID

STK
ALL PROJECT LINES, INC.
42095 ZEVO DR., TEMECULA, CALIFORNIA 92590-3780
Phone: 951.296.9110 Fax: 951.296.6079 Email: stk@stkinc.com

CONSULTANT:

SALASO'BRIEN
[expect a difference]
3220 EXECUTIVE RIDGE
SUITE 210
VISTA, CA 92081
TEL: (760) 560-0100
#21189
ED | ES | SS | NP
www.salasobrien.com
E-Mail admin@ttsqeng.com

PROJECT ADMINISTERED BY:

SAN BERNARDINO COUNTY
PROJECT & FACILITIES
MANAGEMENT DEPARTMENT

385 N. ARROWHEAD AVE.
SAN BERNARDINO, CA 92415

PROJECT NAME:

SAN BERNARDINO
COUNTY FIRE
DEPARTMENT:

FIRE STATION 226

PROJECT # 10.0.0.032

CIP #21-037

CAFM # SAB198

APN # 0273-011-22

1920 DEL ROSA AVE N.
SAN BERNARDINO,
CA 92404

ISSUE INFORMATION:

DATE:	INFORMATION:
04-11-2022	20% CD SET
04-28-2022	50% CD SET
06-15-2022	95% CD SET
09-16-2022	95% CD- 3rd BAY
10-03-2022	PLAN CHECK

SHEET INFORMATION:

STK PROJECT NO.: 374-154-21
SCALE: AS NOTED
DATE: JANUARY 2021
PLOT DATE: –
DRAWING NAME:

SEAL:

REGISTERED PROFESSIONAL ENGINEER
No. M29630
Exp. 3/31/23
MECHANICAL
STATE OF CALIFORNIA

SHEET TITLE:

PLUMBING
FLOOR PLAN
SEWER & VENT

SHEET NO.:

P2.1

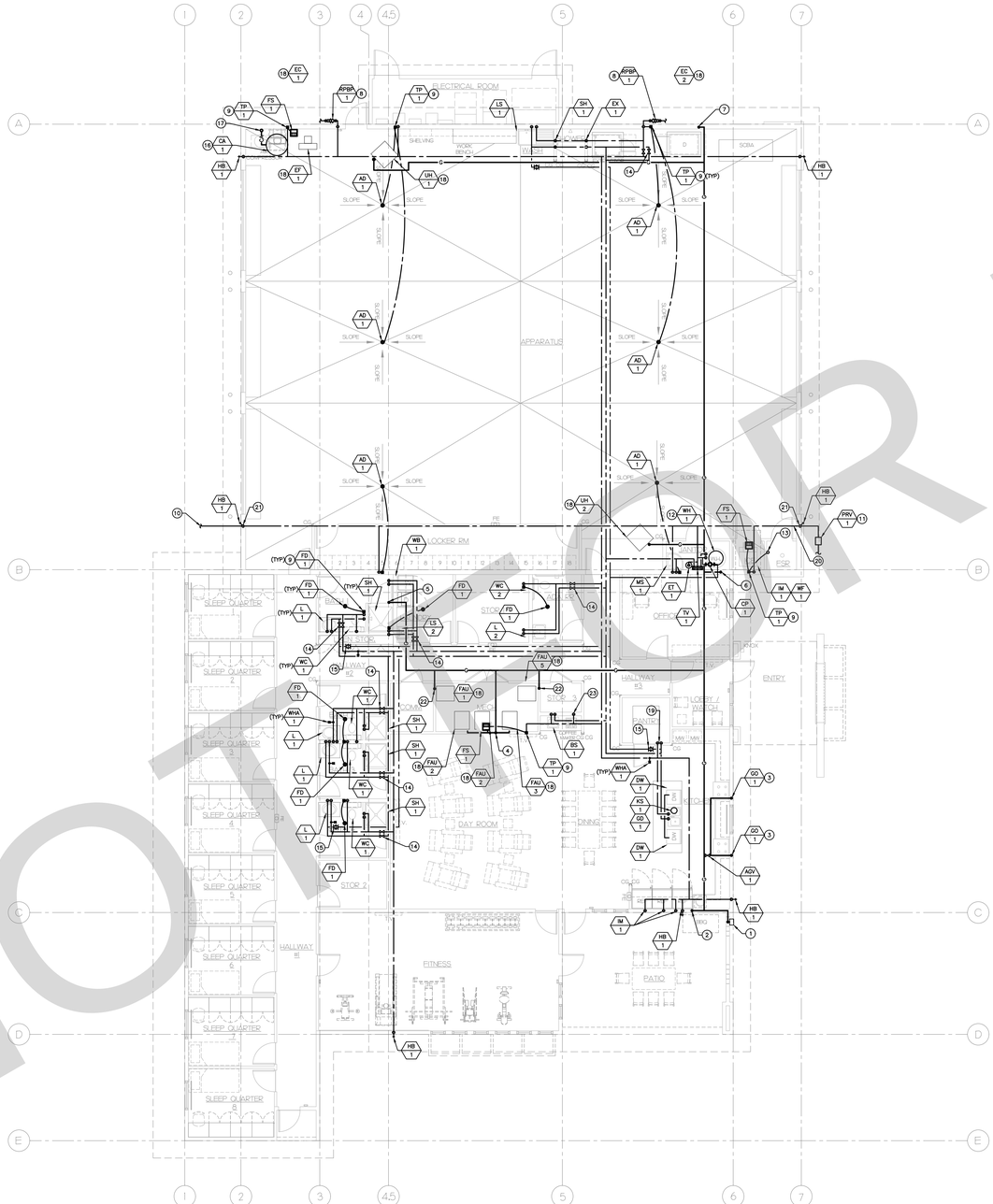

PLUMBING FLOOR PLAN - DOMESTIC WATER 1

1/8" = 1'-0"

GENERAL NOTES

A. CONTRACTOR SHALL FIELD VERIFY EXACT LOCATION OF ALL PIPING AND UTILITIES PRIOR TO START OF WORK. IN THE EVENT OF ANY DISCREPANCIES OR POTENTIAL CONFLICTS, NOTIFY THE ARCHITECT AND ENGINEER IN WRITING PRIOR TO START OF WORK.

B. ALL PIPING LOCATIONS ARE DIAGRAMMATIC. CONTRACTOR SHALL COORDINATE WITH ALL TRADES AND OWNER'S REPRESENTATIVE AND VERIFY EXACT ROUTING PRIOR TO START OF WORK.

C. VERIFY EXACT SIZE AND LOCATION OF ALL PLUMBING CONNECTIONS TO MECHANICAL EQUIPMENT PRIOR TO START OF WORK. IN NO CASE SHALL THE CONNECTION SIZE BE LARGER THAN THE BRANCH PIPING SIZE.

KEY NOTES

1. PROPOSED GAS METER LOCATION.
2. 3/4" GAS DOWN IN WALL TO BBQ.
3. 1" GAS DOWN IN WALL TO RANGE.
4. 1 1/2" GAS DOWN IN WALL TO MECHANICAL EQUIPMENT. SEE GAS CONNECTION DETAIL 6/P5.1.
5. 3/4" GAS DOWN IN WALL TO DRYER-1.
6. 1 1/4" GAS DOWN IN WALL TO WATER HEATER.
7. 1" GAS DOWN IN WALL TO DRYER-2.
8. RPBP FOR CW SUPPLY TO EVAP COOLER.
9. 1/2" CW DOWN TO TRAP PRIMER. SEE DETAIL 1/P5.2.
10. SEE SHEET P1.1 FOR CONTINUATION.
11. CW SOV AND PRV IN YARDBOX. SEE DETAIL 4/P5.2.
12. GAS-FIRED WATER HEATER. SEE DETAIL 7/P5.1. ROUTE PTR PIPING TO MOP SINK.
13. FIRE RISER HUB DRAIN. SEE DETAIL 3/P5.1.
14. CW AND HW SHUT-OFF VALVE ABOVE CEILING. PROVIDE APPROVED ACCESS PANEL IF ABOVE HARD-LID CEILING.
15. HWR BALANCING VALVE ABOVE CEILING. PROVIDE APPROVED ACCESS PANEL IF ABOVE HARD-LID CEILING.
16. AIR COMPRESSOR FLOOR-MOUNTED BELOW PLYMOVENT PLATFORM. SEE 8/P5.1. FOR PIPING DETAIL.
17. COMPRESSED AIR UP AGAINST WALL TO PLYMOVENT FOR CONNECTION.
18. MECHANICAL EQUIPMENT SHOWN FOR REFERENCE ONLY. SEE MECHANICAL PLANS FOR EXACT LOCATION AND SPECIFICATIONS.
19. 3/4" CW AND 3/4" HW DOWN IN WALL TO UNDER SLAB TO KS-1 AND DW-1.
20. 2"CW PIPE UP IN WALL.
21. 3/4" PIPE DOWN IN WALL ROUTED TO HB-1 OUTSIDE BLDG.
22. 1" GAS DOWN IN WALL TO MECHANICAL EQUIPMENT.
23. 1/2" CW TO COFFEE MACHINE.

NOT FOR BID

STK
42095 ZEVO DR., TEMECULA, CALIFORNIA 92590-3780
Phone: 951.296.9110 Fax: 951.296.6079 Email: stk@stkinc.com

CONSULTANT:

SALASO'BRIEN
[expect a difference]
3220 EXECUTIVE RIDGE
SUITE 210
VISTA, CA 92081
TEL. (760) 560-0100
#21189
ED | ES | SS | NP
www.salasobrien.com
E-Mail admin@tsqeng.com

PROJECT ADMINISTERED BY:
SAN BERNARDINO COUNTY
PROJECT & FACILITIES
MANAGEMENT DEPARTMENT

385 N. ARROWHEAD AVE.
SAN BERNARDINO, CA 92415

PROJECT NAME:
SAN BERNARDINO
COUNTY FIRE
DEPARTMENT:
FIRE STATION 226

PROJECT # 10.10.10.032

CIP #21-037

CAFM # SAB198

APN # 0273-011-22

1920 DEL ROSA AVE N.
SAN BERNARDINO,
CA 92404

ISSUE INFORMATION:

DATE:	INFORMATION:
04-11-2022	20% CD SET
04-28-2022	50% CD SET
06-15-2022	95% CD SET
09-16-2022	95% CD- 3rd BAY
10-03-2022	PLAN CHECK

SHEET INFORMATION:

STK PROJECT NO.: 374-154-21
SCALE: AS NOTED
DATE: JANUARY 2021
PLOT DATE: –
DRAWING NAME:

SEAL:

REGISTERED PROFESSIONAL ENGINEER
RICHARD J. PATTON
No. M29230
Exp. 3/31/23
MECHANICAL
STATE OF CALIFORNIA

SHEET TITLE:
PLUMBING
FLOOR PLAN
DOMESTIC
WATER

SHEET NO.:
P2.2

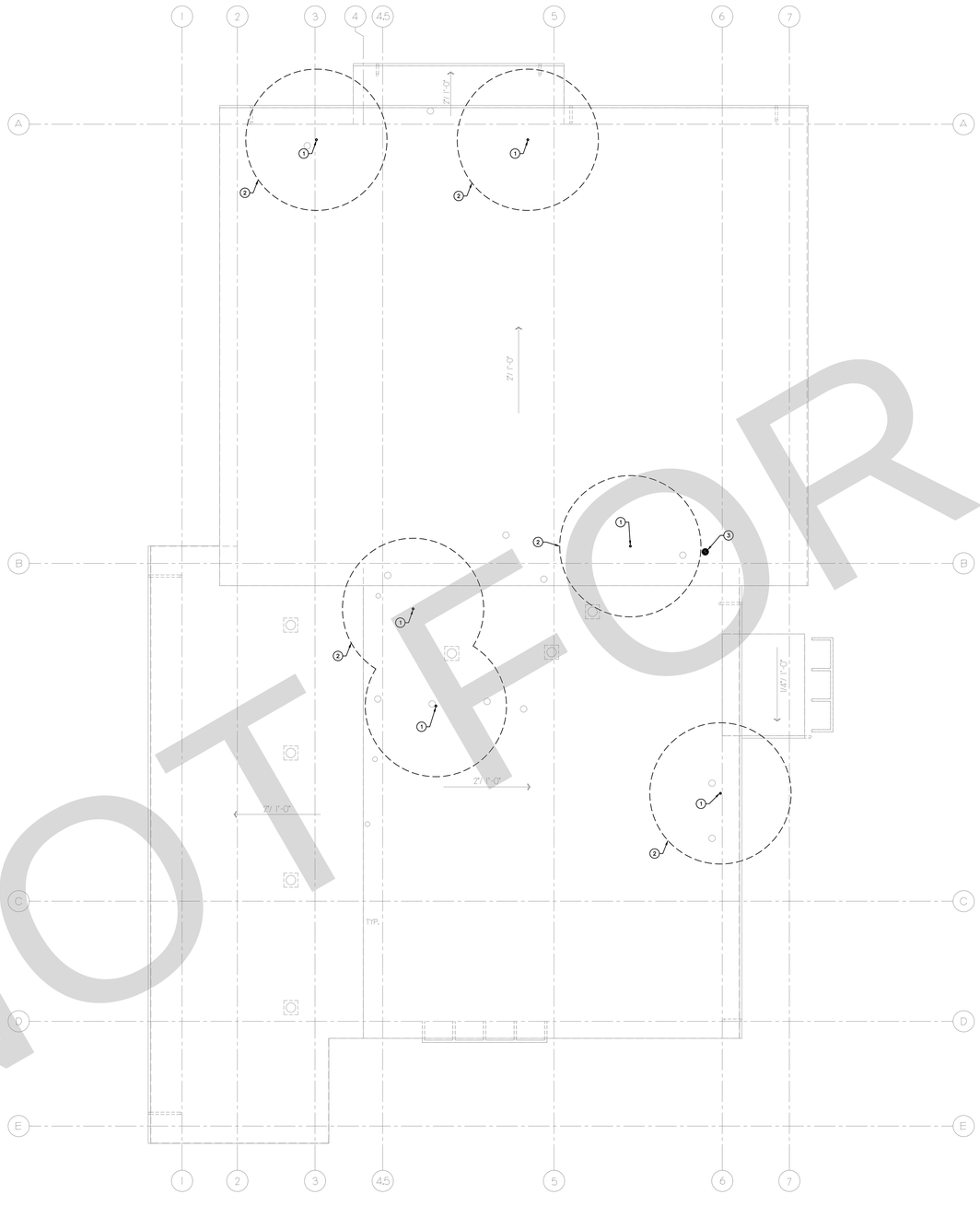

PLUMBING ROOF PLAN 1

1/8" = 1'-0"

GENERAL NOTES

A. CONTRACTOR SHALL FIELD VERIFY EXACT LOCATION OF ALL PIPING AND UTILITIES PRIOR TO START OF WORK. IN THE EVENT OF ANY DISCREPANCIES OR POTENTIAL CONFLICTS, NOTIFY THE ARCHITECT AND ENGINEER IN WRITING PRIOR TO START OF WORK.

B. ALL PIPING LOCATIONS ARE DIAGRAMMATIC. CONTRACTOR SHALL COORDINATE WITH ALL TRADES AND OWNER'S REPRESENTATIVE AND VERIFY EXACT ROUTING PRIOR TO START OF WORK.

C. VERIFY EXACT SIZE AND LOCATION OF ALL PLUMBING CONNECTIONS TO MECHANICAL EQUIPMENT PRIOR TO START OF WORK. IN NO CASE SHALL THE CONNECTION SIZE BE LARGER THAN THE BRANCH PIPING SIZE.

KEY NOTES

1. VENT THRU ROOF. SEE DETAIL 1/P5.1.
2. MAINTAIN MINIMUM 10 FOOT HORIZONTAL CLEARANCE FROM AND 3 FOOT VERTICAL CLEARANCE ABOVE ALL OPERABLE WINDOWS, DOORS AND MECHANICAL AIR INTAKES, BUILDING OPENINGS, AND VENT SHAFTS.
3. WATER HEATER CONCENTRIC VENT. INSTALL PER MANUFACTURER'S WRITTEN INSTRUCTIONS.

NOT FOR BID

STK
STK ENERGY CONSULTING
42095 ZEVO DR., TEMECULA, CALIFORNIA 92590-3780
Phone: 951.296.9110 Fax: 951.296.6079 Email: stk@stkinc.com

CONSULTANT:

SALASO'BRIEN
[expect a difference]
3220 EXECUTIVE RIDGE
SUITE 210
VISTA, CA 92081
TEL: (760) 560-0100
#21189
ED | ES | SS | NP
www.salasobrien.com
E-Mail admin@tsqeng.com

PROJECT ADMINISTERED BY:

SAN BERNARDINO COUNTY
PROJECT & FACILITIES
MANAGEMENT DEPARTMENT

385 N. ARROWHEAD AVE.
SAN BERNARDINO, CA 92415

PROJECT NAME:

SAN BERNARDINO
COUNTY FIRE
DEPARTMENT:

FIRE STATION 226

PROJECT # 10.10.10.032

CIP #21-037

CAFM # SAB198

APN # 0273-011-22

1920 DEL ROSA AVE N.
SAN BERNARDINO,
CA 92404

ISSUE INFORMATION:

DATE:	INFORMATION:
04-11-2022	20% CD SET
04-28-2022	50% CD SET
06-15-2022	95% CD SET
09-16-2022	95% CD- 3rd BAY
10-03-2022	PLAN CHECK

SHEET INFORMATION:

STK PROJECT NO.: 374-154-21
SCALE: AS NOTED
DATE: JANUARY 2021
PLOT DATE: –
DRAWING NAME:

SEAL:

SHEET TITLE:

PLUMBING
ROOF PLAN

SHEET NO.:

P2.3

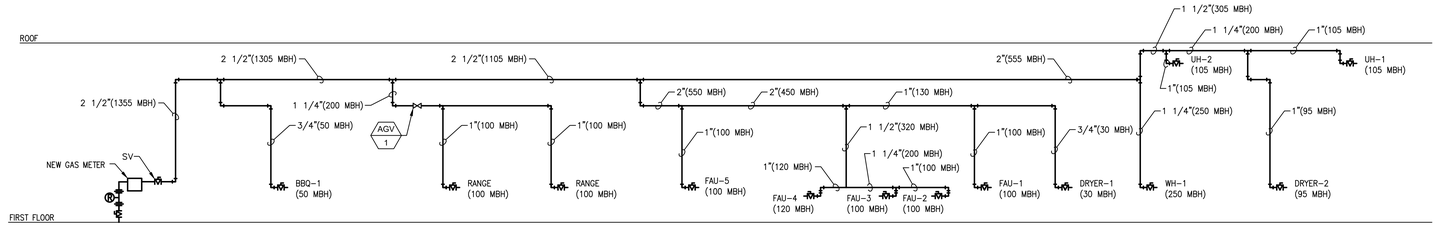

NOTES: GAS PIPE BRANCH SIZE TO EQUIPMENT SHALL NEVER BE SMALLER THAN CONNECTION SIZES TO EQUIPMENT. IN CASE OF A DISCREPANCY, PROVIDE THE LARGER SIZE PIPE.

CONTRACTOR SHALL FIELD VERIFY EXACT LENGTH, GAS LOAD REQUIREMENTS AND EQUIPMENT CONNECTION SIZES PRIOR TO START OF WORK. IN CASE OF ANY DISCREPANCIES OR POTENTIAL CONFLICT, NOTIFY ARCHITECT AND ENGINEER IN WRITING PRIOR TO START OF WORK.

FOR TYPICAL GAS CONNECTION DETAIL SEE 6/P5.1 SHEET.

TOTAL LENGTH: 161'
BASED ON TABLE 1215.2(1)
CPC,
SCH.40 METALLIC PIPE
[NFPA 54:TABLE 6.2(B)]

GAS	NATURAL
INLET PRESSURE	<2 PSI
PRESSURE DROP	0.5 IN W.C.
SPECIFIC GRAVITY	0.60

	PIPE SIZE								
NOMINAL	1/2"	3/4"	1"	1-1/4"	1-1/2"	2"	2-1/2"	3"	4"
LENGTH(FT)	CAPACITY IN CUBIC FEET OF GAS PER HOUR (CFH)								
175	37	77	144	296	443	854	1360	2410	4910

NEW GAS SYSTEM

WH-1 = 250 MBH
BBQ-1 = 50 MBH
DRYER-1 = 30 MBH
DRYER-2 = 95 MBH
RANGE = 100 MBH
RANGE = 100 MBH
FAU-1 = 100 MBH
FAU-2 = 100 MBH
FAU-3 = 100 MBH
FAU-4 = 120 MBH
FAU-5 = 100 MBH
UH-1 = 105 MBH
UH-2 = 105 MBH

TOTAL NEW MBH = 1355

PLUMBING RISER DIAGRAM - GAS (1)

NO SCALE

GENERAL NOTES

A. CONTRACTOR SHALL FIELD VERIFY EXACT LOCATION OF ALL PIPING AND UTILITIES PRIOR TO START OF WORK. IN THE EVENT OF ANY DISCREPANCIES OR POTENTIAL CONFLICTS, NOTIFY THE ARCHITECT AND ENGINEER IN WRITING PRIOR TO START OF WORK.

B. ALL PIPING LOCATIONS ARE DIAGRAMMATIC. CONTRACTOR SHALL COORDINATE WITH ALL TRADES AND OWNER'S REPRESENTATIVE AND VERIFY EXACT ROUTING PRIOR TO START OF WORK.

C. VERIFY EXACT SIZE AND LOCATION OF ALL PLUMBING CONNECTIONS TO MECHANICAL EQUIPMENT PRIOR TO START OF WORK. IN NO CASE SHALL THE CONNECTION SIZE BE LARGER THAN THE BRANCH PIPING SIZE.

KEY NOTES

(1) SEE SHEET P1.1 FOR CONTINUATION.

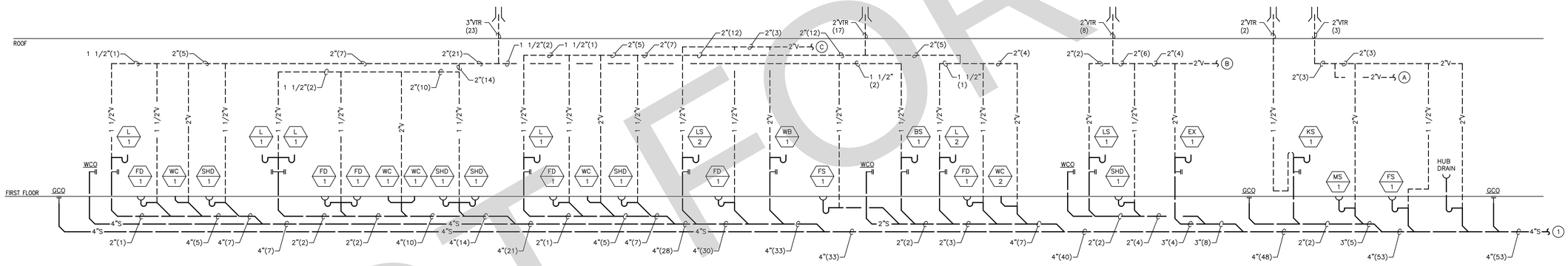

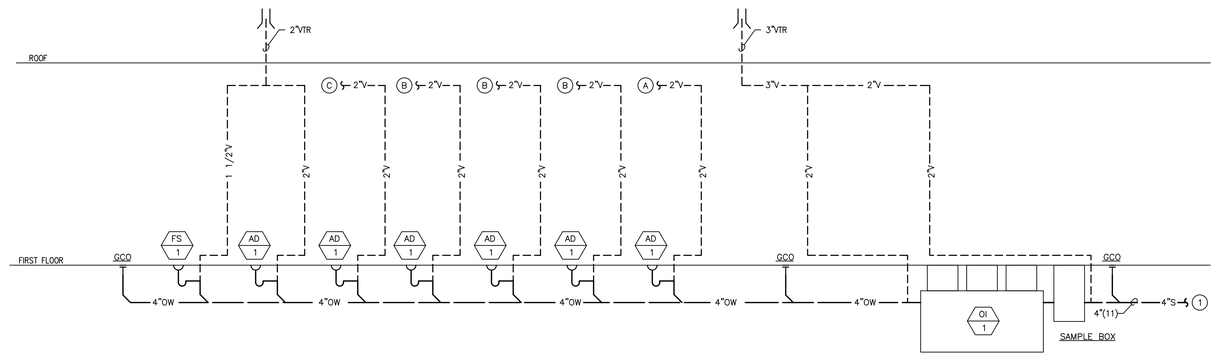

PLUMBING RISER DIAGRAM - SEWER AND VENT (2)

NO SCALE

NOT FOR BID

STK
ALL PARTS UNIQUE, INC.
42095 ZEVO DR., TEMECULA, CALIFORNIA 92590-3780
Phone: 951.296.9110 Fax: 951.296.6079 Email: stk@stkinc.com

CONSULTANT:

SALASO'BRIEN
[expect a difference]
3220 EXECUTIVE RIDGE
SUITE 210
VISTA, CA 92081
TEL: (760) 560-0100
#21189
ED | ES | SS | NP
www.salasobrien.com
E-Mail admin@tsqeng.com

PROJECT ADMINISTERED BY:
SAN BERNARDINO COUNTY
PROJECT & FACILITIES
MANAGEMENT DEPARTMENT

385 N. ARROWHEAD AVE.
SAN BERNARDINO, CA 92415

PROJECT NAME:
SAN BERNARDINO
COUNTY FIRE
DEPARTMENT:
FIRE STATION 226

PROJECT # 10.10.1032
CIP #21-037
CAFM # SAB198
APN # 0273-011-22

1920 DEL ROSA AVE N.
SAN BERNARDINO,
CA 92404

ISSUE INFORMATION:

DATE:	INFORMATION:
04-11-2022	20% CD SET
04-28-2022	50% CD SET
06-15-2022	95% CD SET
09-16-2022	95% CD- 3rd BAY
10-03-2022	PLAN CHECK

SHEET INFORMATION:

STK PROJECT NO.: 374-154-21
SCALE: AS NOTED
DATE: JANUARY 2021
PLOT DATE: –
DRAWING NAME:

SEAL:

REGISTERED PROFESSIONAL ENGINEER
REZA SOBHANIAN
No. M29230
Exp. 3/31/23
MECHANICAL
STATE OF CALIFORNIA

SHEET TITLE:
PLUMBING
RISER
DIAGRAM

SHEET NO.:
P4.1

GENERAL NOTES

A. CONTRACTOR SHALL FIELD VERIFY EXACT LOCATION OF ALL PIPING AND UTILITIES PRIOR TO START OF WORK. IN THE EVENT OF ANY DISCREPANCIES OR POTENTIAL CONFLICTS, NOTIFY THE ARCHITECT AND ENGINEER IN WRITING PRIOR TO START OF WORK.

B. ALL PIPING LOCATIONS ARE DIAGRAMMATIC. CONTRACTOR SHALL COORDINATE WITH ALL TRADES AND OWNER'S REPRESENTATIVE AND VERIFY EXACT ROUTING PRIOR TO START OF WORK.

C. VERIFY EXACT SIZE AND LOCATION OF ALL PLUMBING CONNECTIONS TO MECHANICAL EQUIPMENT PRIOR TO START OF WORK. IN NO CASE SHALL THE CONNECTION SIZE BE LARGER THAN THE BRANCH PIPING SIZE.

KEY NOTES

(1) SEE SHEET P1.1 FOR CONTINUATION.

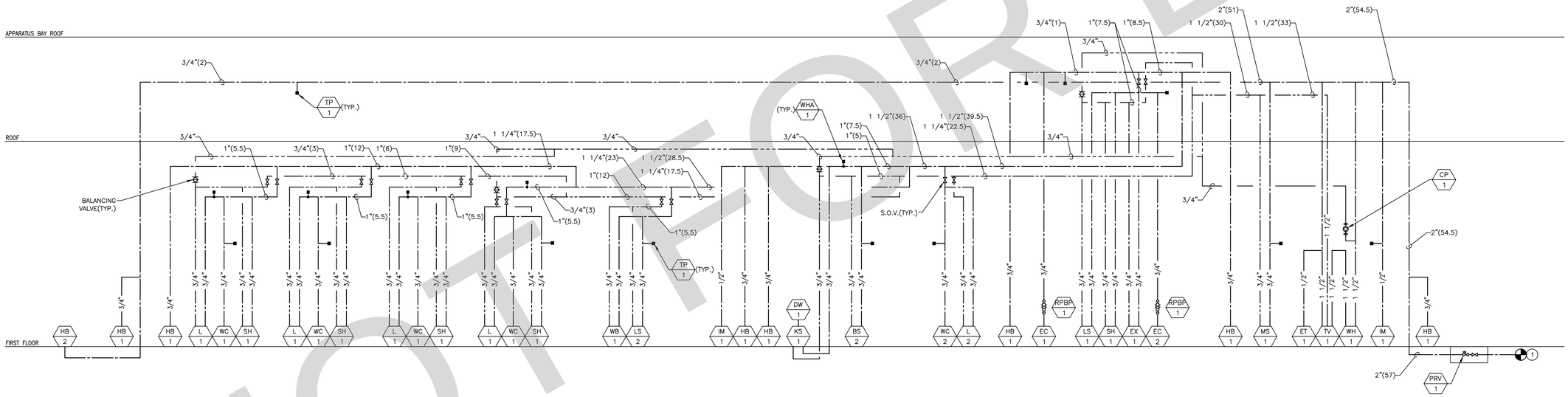

PLUMBING RISER DIAGRAM - DOMESTIC WATER (1)

NO SCALE

NOT FOR BID

STK
42095 ZEVO DR., TEMECULA, CALIFORNIA 92590-3780
Phone: 951.296.9110 Fax: 951.296.6079 Email: stk@stkinc.com

CONSULTANT:

SALASO'BRIEN
[expect a difference]
3220 EXECUTIVE RIDGE
SUITE 210
VISTA, CA 92081
TEL: (760) 560-0100
#21189
ED | ES | SS | NP
www.salasobrien.com
E-Mail admin@tsqeng.com

PROJECT ADMINISTERED BY:
SAN BERNARDINO COUNTY
PROJECT & FACILITIES
MANAGEMENT DEPARTMENT

385 N. ARROWHEAD AVE.
SAN BERNARDINO, CA 92415

PROJECT NAME:
SAN BERNARDINO
COUNTY FIRE
DEPARTMENT:
FIRE STATION 226

PROJECT # 10.10.10.032
CIP #21-037
CAFM # SAB198
APN # 0273-011-22

1920 DEL ROSA AVE N.
SAN BERNARDINO,
CA 92404

ISSUE INFORMATION:

DATE:	INFORMATION:
04-11-2022	20% CD SET
04-28-2022	50% CD SET
06-15-2022	95% CD SET
09-16-2022	95% CD- 3rd BAY
10-03-2022	PLAN CHECK

SHEET INFORMATION:

STK PROJECT NO.: 374-154-21
SCALE: AS NOTED
DATE: JANUARY 2021
PLOT DATE: –
DRAWING NAME:

SEAL:

REGISTERED PROFESSIONAL ENGINEER
TODD TAYLOR
No. M29230
Exp. 3/31/23
MECHANICAL
STATE OF CALIFORNIA

SHEET TITLE:
PLUMBING
RISER
DIAGRAM

SHEET NO.:
P4.2

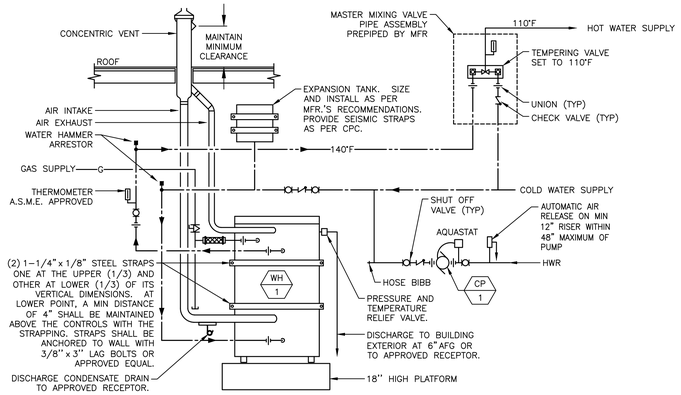

GAS FIRED, TANK TYPE WATER HEATER DETAIL

SCALE NONE | 7

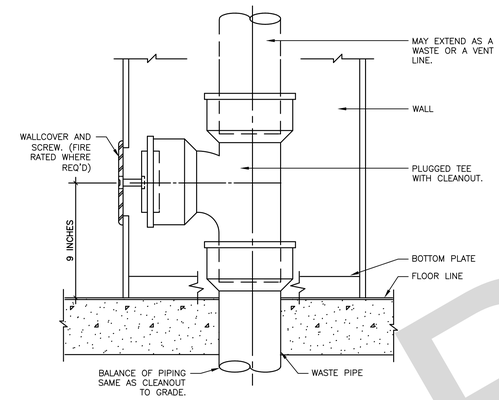

WALL CLEANOUT DETAIL

SCALE NONE | 4

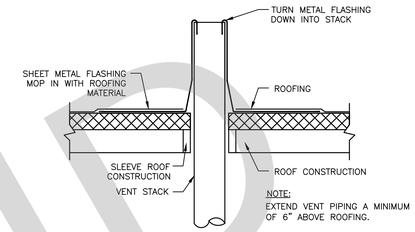

VENT THRU ROOF DETAIL

SCALE NONE | 1

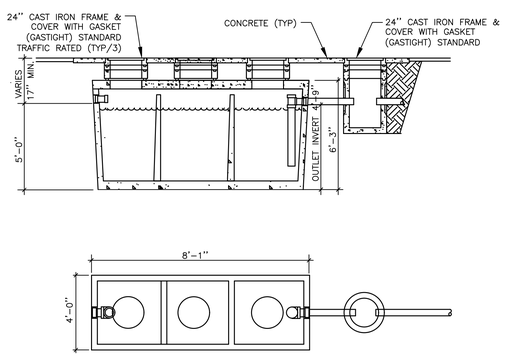

DETAIL SHOWS GENERAL SCHEMATIC REQUIREMENTS. CONTRACTOR SHALL SUBMIT PROPOSED CLARIFIER INSTALLATION PLANS AND SPECIFICATIONS TO LOCAL AUTHORITIES FOR THEIR APPROVAL BEFORE ACQUISITION OF INTERCEPTOR. PROVIDE INTERCEPTOR WITH ADEQUATE STRUCTURAL STRENGTH TO ACCOMODATE VEHICULAR TRAFFIC AT INSTALLATION LOCATION. PROVIDE TANK WITH MINIMUM 750 GALLON CAPACITY OR LARGER IF REQUIRED BY LOCAL AUTHORITIES – VERIFY.

LOAD CALCULATION PER UPC 1017.2

AREA X 7.5 GALLONS / 100 SQ. FT.

3100 SQ. FT X 7.5 GALLONS / 100 SQ. FT. = 233 GALLONS

USE 750 GALLONS

OIL INTERCEPTOR DETAIL

SCALE NONE | 10

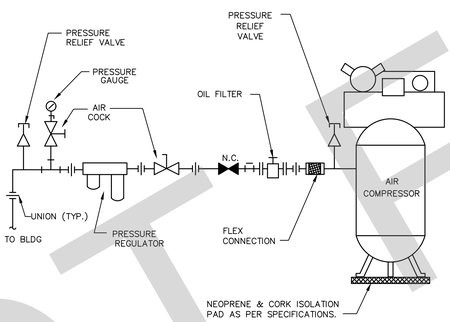

AIR COMPRESSOR PIPING DETAIL

SCALE NONE | 8

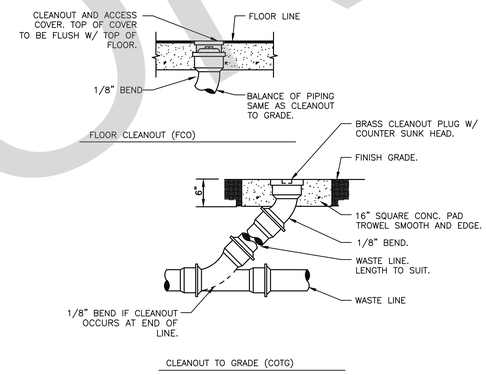

FLOOR AND GRADE CLEANOUTS

SCALE NONE | 5

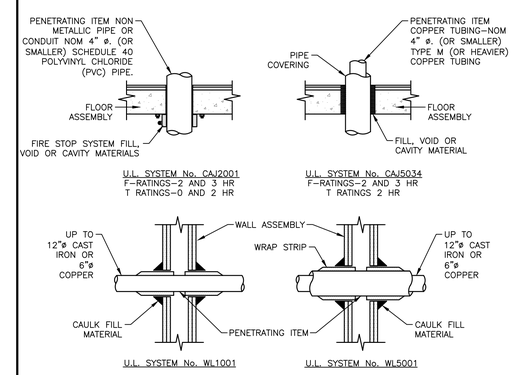

NOTE: PENETRATIONS OF PIPES, CONDUITS, ETC., IN WALLS, FLOORS OR CEILING ASSEMBLIES REQUIRING PROTECTED OPENINGS SHALL BE FIRE STOPPED. FIRE STOP MATERIAL SHALL BE A TESTED ASSEMBLY AS PRESCRIBED IN U.B.C. STANDARD 43-1 AND AS APPROVED BY THE STATE FIRE MARSHALL (C.B.C. 4304(E), 4305(A))

PIPE PENETRATION DETAIL

SCALE NONE | 2

WATER HAMMER ARRESTOR SCHEDULE

P.D.I. SIZE	"A"	"B"	"C"	"D"	"E"	"F"
FIXTURE UNITS	1-11	12-32	33-60	61-113	114-154	155-330
CONNECTION SIZE	3/4"	3/4"	1"	1"	1"	1"

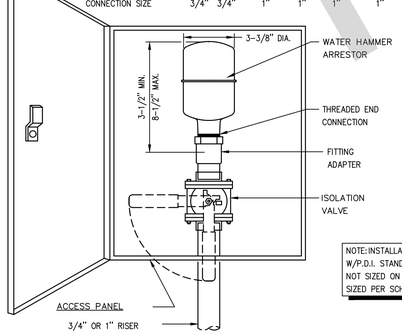

NOTE:INSTALLATION SHALL COMPLY W/P.D.I. STANDARD WH201. UNITS NOT SIZED ON PLAN SHALL BE SIZED PER SCHEDULE ABOVE

WATER HAMMER ARRESTOR DETAIL

SCALE NONE | 11

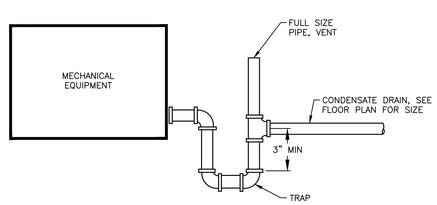

NOTE: CONTRACTOR SHALL VERIFY EXACT SIZE AND LOCATION OF ALL PLUMBING CONNECTIONS INTO MECHANICAL UNITS PRIOR TO START OF WORK. BRANCH PIPE SIZE SHALL NOT BE LESS THAN THE CONNECTION SIZE.

CONDENSATE DRAIN TRAP DETAIL

SCALE NONE | 9

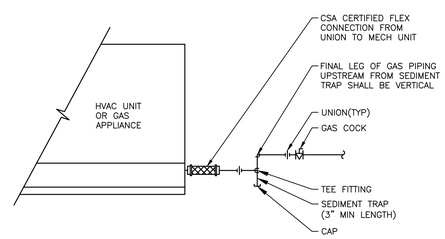

NOTE: SEDIMENT TRAP NOT REQUIRED FOR APPLIANCES WITH INTERNAL SEDIMENT TRAP, RANGES, CLOTHES DRYERS, FIREPLACES OR OUTDOOR GRILLES.

GAS CONNECTION DETAIL

SCALE NONE | 6

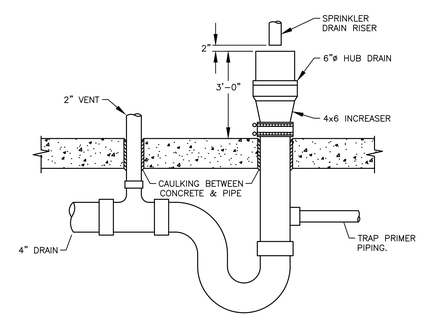

FIRE SPRINKLER RISER DRAIN DETAIL

SCALE NONE | 3

NOT FOR BID

STK
42095 ZEVO DR., TEMECULA, CALIFORNIA 92590-3780
Phone: 951.296.9110 Fax: 951.296.6079 Email: stk@stkinc.com

CONSULTANT:
SALAS O'BRIEN
[expect a difference]
3220 EXECUTIVE RIDGE
SUITE 210
VISTA, CA 92081
TEL: (760) 560-0100
#21189
ED | ES | SS | NP
www.salasobrien.com
E-Mail admin@tsqeng.com

PROJECT ADMINISTERED BY:
SAN BERNARDINO COUNTY PROJECT & FACILITIES MANAGEMENT DEPARTMENT

385 N. ARROWHEAD AVE.
SAN BERNARDINO, CA 92415

PROJECT NAME:
SAN BERNARDINO COUNTY FIRE DEPARTMENT:
FIRE STATION 226

PROJECT # 10.10.1032
CIP #21-037
CAFM # SAB198
APN # 0273-011-22

1920 DEL ROSA AVE N.
SAN BERNARDINO,
CA 92404

ISSUE INFORMATION:

DATE:	INFORMATION:
04-11-2022	20% CD SET
04-28-2022	50% CD SET
06-15-2022	95% CD SET
09-16-2022	95% CD- 3rd BAY
10-03-2022	PLAN CHECK

SHEET INFORMATION:
STK PROJECT NO.: 374-154-21
SCALE: AS NOTED
DATE: JANUARY 2021
PLOT DATE: –
DRAWING NAME: –

SEAL:
REGISTERED PROFESSIONAL ENGINEER
MICHAEL TAYLOR
No. M28030
Exp. 3/31/23
MECHANICAL
STATE OF CALIFORNIA

SHEET TITLE:
PLUMBING DETAILS

SHEET NO.:
P5.1

NOT USED — SCALE NONE — 10

NOT USED — SCALE NONE — 7

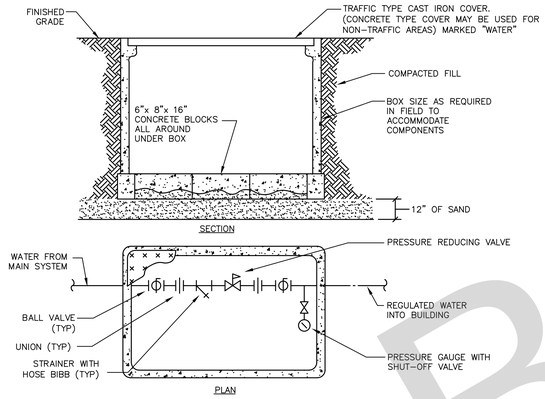

WATER PRV YARDBOX DETAIL — SCALE NONE — 4

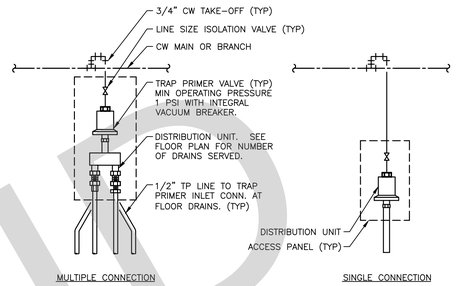

TRAP PRIMER DETAIL — SCALE NONE — 1

NOT USED — SCALE NONE — 11

NOT USED — SCALE NONE — 8

NOT USED — SCALE NONE — 5

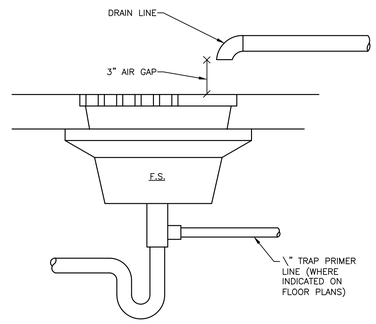

AIR GAP FITTING DETAIL — SCALE NONE — 2

NOT USED — SCALE NONE — 12

NOT USED — SCALE NONE — 9

NOT USED — SCALE NONE — 6

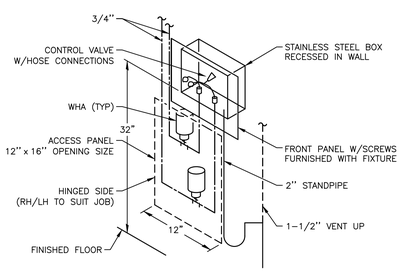

WASHING MACHINE CONNECTION DETAIL — SCALE NONE — 3

NOT FOR BID

STK
42095 ZEVO DR., TEMECULA, CALIFORNIA 92590-3780
Phone: 951.296.9110 Fax: 951.296.6079 Email: stk@stkinc.com

CONSULTANT:
SALASO'BRIEN
[expect a difference]
3220 EXECUTIVE RIDGE
SUITE 210
VISTA, CA 92081
TEL: (760) 560-0100
#21189
ED | ES | SS | NP
www.salasobrien.com
E-Mail admin@tlsgeng.com

PROJECT ADMINISTERED BY:
SAN BERNARDINO COUNTY
PROJECT & FACILITIES
MANAGEMENT DEPARTMENT

385 N. ARROWHEAD AVE.
SAN BERNARDINO, CA 92415

PROJECT NAME:
SAN BERNARDINO COUNTY FIRE DEPARTMENT:
FIRE STATION 226

PROJECT # 10.0.0.032
CIP #21-037
CAFM # SAB198
APN # 0273-011-22

1920 DEL ROSA AVE N.
SAN BERNARDINO,
CA 92404

ISSUE INFORMATION:

DATE:	INFORMATION:
04-11-2022	20% CD SET
04-28-2022	50% CD SET
06-15-2022	95% CD SET
09-16-2022	95% CD- 3rd BAY
10-03-2022	PLAN CHECK

SHEET INFORMATION:
STK PROJECT NO.: 374-154-21
SCALE: AS NOTED
DATE: JANUARY 2021
PLOT DATE: –
DRAWING NAME:

SEAL:
REGISTERED PROFESSIONAL ENGINEER
MICHAEL P. TAYLOR
No. M29230
Exp. 3/31/23
MECHANICAL
STATE OF CALIFORNIA

SHEET TITLE:
PLUMBING DETAILS

SHEET NO.:
P5.2

ELECTRICAL SYMBOL LEGEND

SOME SYMBOLS IN THIS LEGEND MAY OR MAY NOT BE USED IN THIS PROJECT. FLOOR PLANS SHALL DICTATE WHICH SYMBOLS ARE APPLICABLE.

SYMBOL | DESCRIPTION

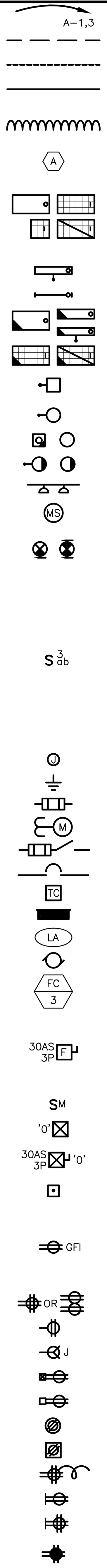

- CONDUIT HOMERUN WITH PANEL DESIGNATION AND CIRCUITS INDICATED.
- CONDUIT/WIRING, INSTALLED IN OR BELOW FLOOR SLAB.
- CONDUIT/WIRING, EXPOSED.
- CONDUIT/WIRING CONCEALED IN WALL OR CEILING SPACE.
- CONDUIT, FLEXIBLE CONNECTION
  DRY LOCATIONS – FLEXIBLE STEEL CONDUIT
  WET LOCATIONS – LIQUIDTIGHT FLEXIBLE STEEL CONDUIT
- LIGHT FIXTURE DESIGNATION
- LED LIGHTING FIXTURE
  UPPER CASE LETTER(S) = FIXTURE TYPE
  NUMBER = CIRCUIT NUMBER
  LOWER CASE LETTER(S) = ROOM SWITCHING CIRCUITS AND NUMBER OF SWITCHES
  NOTE: THIS LABELING SCHEME IS TYPICAL FOR ALL LIGHT FIXTURES.
- LED, WALL MOUNTED LIGHT FIXTURE.
- LED STRIP OR UNDERCABINET TASK LIGHT
- LED LIGHTING FIXTURE WITH EMERGENCY BATTERY PACK OR CONNECTED TO EMERGENCY POWER SYSTEM.
- POLE MOUNTED LIGHT FIXTURE WITH POLE AND FOUNDATION. NUMBER AND ORIENTATION OF LUMINAIRES AS SHOWN ON DRAWINGS.
- LIGHTING FIXTURE, WALL OR BRACKET MOUNTED.
- LIGHTING FIXTURE, SURFACE OR RECESSED MOUNTED.
- LIGHTING FIXTURE WITH EMERGENCY BATTERY PACK OR CONNECTED TO EMERGENCY POWER SYSTEM.
- TRACK LIGHTING WITH FIXTURES.
- MOTION SENSOR, DUAL TECHNOLOGY, CEILING MOUNTED NOT TO BE LOCATED WITHIN 48" OF ANY HVAC DIFFUSER.
- EXIT LIGHT FIXTURE. DARKENED AREA INDICATES FIXTURE FACE. ARROW INDICATES DIRECTION OF FACE ARROW.
  LL = LOW LEVEL
- LIGHT SWITCH, WALL MOUNTED AT +42" AFF, U.O.N.
  2 = TWO POLE, 3 = THREE WAY, 4 = FOUR WAY
  a,b = INDICATES ROOM SWITCHING CIRCUITS AND NUMBER OF SWITCHES
  D = DIMMER
  K = KEYED
  OC = OCCUPANCY SENSOR, DUAL TECHNOLOGY
  VS = VACANCY SENSOR, MANUAL ON, WHERE REQUIRED BY CODE
  P = PILOT LIGHT, LIGHTED IN THE OFF POSITION.
  BP = BYPASS TIMER
  WP = WEATHERPROOF
  WR = WEATHER RESISTANT
  F = FAN SWITCH
  S = SOLATUBE CONTROL
  T = TIMER SWITCH
  LV = LOW VOLTAGE
- JUNCTION BOX, HANDHOLE OR PULLBOX WITH COVER, SIZE PER NEC, ART. 314.28.
- GROUND
- FUSE
- UTILITY COMPANY APPROVED CT/METER PROVISIONS
- FUSED SWITCH
- CIRCUIT BREAKER
- TIME CLOCK
- LIGHTING OR POWER PANEL – FLUSH MOUNT UNLESS INDICATED OTHERWISE
- DISTRIBUTION BOARD, LIGHTING OR POWER PANEL DESIGNATION
- MOTOR OR MECHANICAL EQUIPMENT, WITH FLEXIBLE CONNECTION
- MECHANICAL EQUIPMENT DESIGNATION
- DISCONNECT SWITCH (30=AMPS 3=POLES)
  NEMA 1 INDOORS
  NEMA 3R IN WET LOCATIONS
  F = FUSED
  PROVIDE TIME–DELAY TYPE FUSE(S) SIZED PER EQUIPMENT MANUFACTURERS NAMEPLATE RATING.
- MANUAL MOTOR STARTER SWITCH WITH THERMAL OVERLOAD PROTECTOR
- MAGNETIC MOTOR STARTER WITH THERMAL OVERLOAD PROTECTOR
- COMBINATION MOTOR STARTER WITH FUSED SWITCH, WITH THERMAL OVERLOAD PROTECTOR AND DUAL ELEMENT FUSES. (30=AMPS, 3=POLES 0=STARTER SIZE).
- PUSHBUTTON OR SHUNT TRIP STATION
- DUPLEX RECEPTACLE, +18" AFF, U.O.N.; NEMA 5–20R, U.O.N.; NUMBER INDICATES CIRCUIT NUMBER.
  GFIF = GROUND FAULT INTERRUPTION, FEED–THRU TYPE
  WP = WEATHERPROOF WITH A WEATHERPROOF WHILE–IN–USE COVER
  WR = WEATHER–RESISTANT TYPE RECEPTACLE WITH A WEATHERPROOF WHILE IN–USE COVER
  GFI = GROUND FAULT INTERRUPTION.
- DOUBLE DUPLEX RECEPTACLE, +18" AFF, U.O.N.
- DUPLEX RECEPTACLE ABOVE COUNTERTOP BACKSPLASH, VERIFY REQ'D HEIGHT
- POWER RECEPTACLE, SEE POWER RECEPTACLE SCHEDULE FOR NEMA CONFIGURATION AND SIZE.
- POWER POLE, WITH NUMBER OF RECEPTACLES INDICATED
- DUPLEX RECEPTACLE, PEDESTAL MOUNTED
- CEILING MOUNTED DUPLEX RECEPTACLE AT T–BAR CEILING NOT TO BE MOUNTED IN CEILING SPACE.
- DUPLEX RECEPTACLE, FLUSH FLOOR MOUNTED, WITH HINGED COVER, U.O.N.
- CORD SUSPENDED CEILING RECEPTACLE, WITH STRAIN RELIEF ASSEMBLY
- SURFACE MOUNTED DUPLEX RECEPTACLE +18" AFF, U.O.N.
- SURFACE MOUNTED DOUBLE DUPLEX RECEPTACLE +18" AFF, U.O.N.
- DOUBLE DUPLEX RECEPTACLE, +18" AFF, U.O.N.
  1–CONTROLLED + 1–UNCONTROLLED DUPLEX RECEPTACLE. CONTROLLED RECEPTACLE TO BE GRAY IN COLOR.

SYMBOL | DESCRIPTION

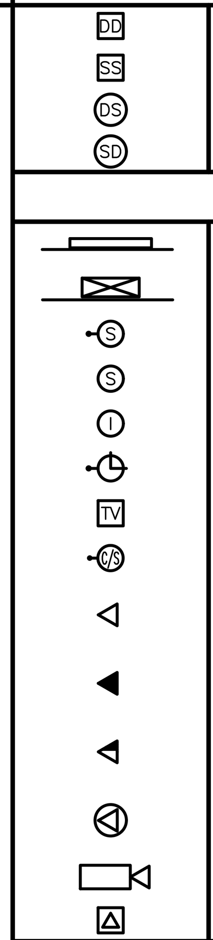

- DUCT MOUNTED SMOKE DETECTOR
- SOLID STATE, ELECTRONIC, ADJUSTABLE TRIP CIRCUIT BREAKER WITH LSIG.
- DAYLIGHT SENSOR
- SMOKE DETECTOR

Signal Systems

- TELEPHONE OR TERMINAL BACKBOARD
- TELEPHONE OR TERMINAL CABINET, WITH PLYWOOD BACKBOARD
- PAGING SPEAKER, WALL MOUNT
- PAGING SPEAKER, CEILING MOUNT WITH BACKBOX
- INTRUSION INFRARED SENSOR.
- TIME–OF–DAY CLOCK OUTLET AND CLOCK, AT +96" AFF, U.O.N.
- CABLE TELEVISION OUTLET, AT +18" AFF, U.O.N.
- CLOCK AND SPEAKER COMBINATION
- DATA JUNCTION BOX, AT +18" AFF U.O.N., WITH 1–1/4" CONDUIT ONLY WITH PULLSTRING UP TO NEAREST CABLE TRAY OR ACCESSIBLE TO CEILING SPACE.
- TELEPHONE JUNCTION BOX, AT +18" AFF U.O.N., WITH 1–1/4" CONDUIT ONLY WITH PULLSTRING UP TO NEAREST ACCESSIBLE TO CEILING SPACE.
- TELE/DATA JUNCTION BOX AT +18" AFF, U.O.N., WITH (2)1–1/4" CONDUIT ONLY WITH PULLSTRING UP TO NEAREST CABLE TRAY OR ACCESSIBLE CEILING SPACE.
  W = WALL MOUNT AT +42" AFF, U.O.N.
- CEILING MOUNTED DATA AT T–BAR CEILING NOT TO BE MOUNTED IN CEILING SPACE, WITH 1" CONDUIT AND (1) CAT 6 CABLE TO INTERMEDIATE DISTRIBUTION FRAME AS INDICATED ON DWGS.
- PROJECTOR SHOWN FOR REFERENCE ONLY
- DATA OUTLET, FLUSH FLOOR MOUNTED, WITH HINGED COVER, U.O.N.

DEMOLITION NOTES

1. THE CONTRACTOR SHALL VISIT THE SITE SPECIFICALLY INCLUDING ALL AREAS INDICATED ON THE DRAWINGS. THE CONTRACTOR SHALL THOROUGHLY FAMILIARIZE THEMSELVES WITH THESE EXISTING CONDITIONS, AND BY SUBMITTING A BID ACCEPTS CONDITIONS UNDER WHICH THEY WILL BE REQUIRED TO PERFORM THEIR WORK.
2. IT SHALL BE THE ELECTRICAL CONTRACTOR'S RESPONSIBILITY TO DISCONNECT AND REMOVE ALL EXISTING LIGHTING FIXTURES, RECEPTACLES, ELECTRICAL EQUIPMENT, ETC., AFFECTED BY THE REMODELED AREA. THIS WILL INCLUDE REROUTING, OR THE EXTENSION OF, EXISTING CONDUIT AND FEEDERS WHERE NECESSARY TO MAINTAIN THE CONTINUITY OF EXISTING EQUIPMENT REMAINING.
3. ALL CIRCUIT NUMBERS AND EXISTING CONDUIT HOMERUNS SHOWN ON THESE DRAWINGS WERE TAKEN FROM EXISTING RECORD DRAWINGS. IT IS THIS CONTRACTOR'S RESPONSIBILITY TO VERIFY LOCATIONS OF HOMERUNS, AND ADJUST CIRCUIT NUMBERS ACCORDING TO EXISTING CONDITIONS IF REQUIRED.
4. WHERE EXISTING WALLS HAVE BEEN REMOVED, AND THERE ARE EXISTING CONDUIT FEEDS WHICH HAVE BEEN CUT–OFF AND CAPPED FLUSH WITH FLOOR, IT IS THE CONTRACTOR'S RESPONSIBILITY TO IDENTIFY AND DIMENSION ALL SUCH CONDUITS ON THE "AS–BUILT" DRAWINGS UNLESS NOTED OTHERWISE.
5. IT SHALL BE THE RESPONSIBILITY OF THIS CONTRACTOR TO MAINTAIN CONTINUITY OF ALL ELECTRICAL SYSTEMS, EQUIPMENT, ETC., REMAINING IN OPERATION WHICH ARE BEING FED BY AN ABANDONED OUTLET. MAINTAINING CONTINUITY SHALL CONSIST OF REROUTING CONDUIT, WIRING, ETC., AS REQUIRED.
6. WHERE NEW CIRCUITS ARE SHOWN TO EXISTING PANELS, INSTALL NEW BREAKERS OF SAME TYPE, STYLE AND RATING (MINIMUM 20 AMP, SINGLE POLE) AS CALLED FOR ON DRAWINGS. IDENTIFY EACH NEW CIRCUIT ON PANEL SCHEDULE.
7. EXISTING CONDUIT MAY BE REUSED IF ADEQUATELY SIZED, BUT IN NO CASE SHALL ANY EXISTING CONDUCTORS BE REUSED.
8. ALL ABANDONED OUTLETS INCLUDING LIGHT, RECEPTACLES, TELEPHONE, ETC., SHALL BE COVERED AND PATCHED TO MATCH THE FINISH OF SURROUNDING WALL OR CEILING TO THE SATISFACTION OF THE OWNER.
9. ALL LIGHTING FIXTURES REMOVED TO ACCOMPLISH DEMOLITION WORK SHALL BE REINSTALLED SIMILAR TO NEW WORK

BRANCH CIRCUIT WIRING NOTE:

1. FOR RECEPTACLE CIRCUITS AND 120 VOLT BRANCH CIRCUITS, UNLESS NOTED OTHERWISE, PROVIDE THE FOLLOWING CONDUCTORS: (1) #12 CONDUCTOR FOR EACH PHASE (I.E. CIRCUIT NUMBER) AND (1) SEPARATE DEDICATED #12 NEUTRAL CONDUCTOR FOR EACH SINGLE 120 VOLT CIRCUIT OR FOR 2 TO 3 CIRCUITS PROVIDED THEY ARE OF DIFFERENT PHASES; (1) EQUIPMENT GROUNDING CONDUCTOR, SIZED PER CEC. FOR CIRCUITS TO COMPUTER/DATA EQUIPMENT, PROVIDE DEDICATED NEUTRAL FOR EACH CIRCUIT.
2. FOR LIGHTING BRANCH CIRCUITS, PROVIDE THE FOLLOWING CONDUCTORS: (1) #12 CONDUCTOR FOR EACH PHASE (I.E. CIRCUIT NUMBER); (1) #12 NEUTRAL CONDUCTOR FOR A SINGLE, 120 OR 277 VOLT CIRCUIT, OR (1) #12 NEUTRAL CONDUCTOR FOR 2 TO 3 CIRCUITS WHERE EACH CIRCUIT IS ON A DIFFERENT PHASE; (1) EQUIPMENT GROUNDING CONDUCTOR, SIZED PER CEC ARTICLE 250 (DO NOT USE A COMMON NEUTRAL FOR MULTIPLE CIRCUITS ON SAME PHASE) (1) INTERCONNECTING CONDUCTOR BETWEEN EACH 3–WAY AND/OR 4–WAY SWITCH

APPLICABLE CODES

- 2019 CALIFORNIA ADMINISTRATIVE CODE (CAC), PART 1, TITLE 24 CCR
- 2019 CALIFORNIA BUILDING CODE (CBC), PART 2, TITLE 24 CCR (2018 EDITION INTERNATIONAL BUILDING CODE, VOL. 1 & 2)
- 2019 CALIFORNIA ELECTRICAL CODE (CEC), PART 3, TITLE 24 CCR (2017 EDITION NATIONAL ELECTRICAL CODE)
- 2019 CALIFORNIA MECHANICAL CODE (CMC), PART 4, TITLE 24 CCR (2018 EDITION IAPMO UNIFORM MECHANICAL CODE)
- 2019 CALIFORNIA PLUMBING CODE (CPC), PART 5, TITLE 24 CCR (2018 EDITION IAPMO UNIFORM PLUMBING CODE)
- 2019 CALIFORNIA ENERGY CODE (CEC), PART 6, TITLE 24 CCR
- 2019 CALIFORNIA FIRE CODE (CFC), PART 9, TITLE 24 CCR (2018 EDITION INTERNATIONAL FIRE CODE)
- 2019 CALIFORNIA EXISTING BUILDING CODE (CEBC), PART 10, TITLE 24 CCR (2018 EDITION INTERNATIONAL)
- 2019 CALIFORNIA GREEN BUILDING STANDARDS CODE (CALGreen), PART 11, TITLE 24 CCR
- 2019 CALIFORNIA REFERENCED STANDARDS CODE, PART 12, TITLE 24, CCR
- TITLE 19 CCR, PUBLIC SAFETY, STATE FIRE MARSHALL REGULATIONS
- 2016 ASME A17.1/CSA B44–13 SAFETY CODE FOR ELEVATORS AND ESCALATORS

PROJECT NOTES

1. THESE DOCUMENTS MAY NOT BE USED FOR ANY REPRODUCTION, BIDDING, OR CONSTRUCTION UNLESS AUTHORIZED, IN WRITING, BY SALAS O'BRIEN AND THE ENGINEER OF RECORD RESPONSIBLE FOR THEIR PREPARATION.
2. VERIFY EXISTING SITE CONDITIONS, ELECTRICAL SERVICE REQUIREMENTS, DIMENSIONS, ELEVATIONS, POINTS OF CONNECTION AND PROJECT CONSTRUCTION LIMITS BEFORE SUBMITTING BID. SUBMITTAL OF BID INDICATES CONTRACTOR IS COGNIZANT OF ALL JOB SITE CONDITIONS AND WORK TO BE PERFORMED. ANY DISCREPANCIES SHALL BE CALLED TO THE ATTENTION OF THE OWNER'S REPRESENTATIVE.
3. THESE DRAWINGS ARE DIAGRAMMATIC AND ONLY INDICATE THE INTENT OF OUTLETS, DEVICES, ETC., TO BE CONNECTED AND THE CIRCUIT NUMBERS TO WHICH THEY ARE TO BE CONNECTED TO. CONTRACTOR SHALL INSTALL ALL REQUIRED JUNCTION BOXES ETC., AS REQUIRED FOR A COMPLETE AND OPERATIONAL SYSTEM WHICH COMPLIES WITH ALL LOCAL AND NATIONAL GOVERNING CODES.
4. ALL EXTERIOR EQUIPMENT SHALL BE WEATHERPROOF.
5. LOCATIONS OF ALL EQUIPMENT SHALL BE VERIFIED PRIOR TO ROUGH–IN.
6. EACH CONDUCTOR OF EVERY SYSTEM SHALL BE PERMANENTLY TAGGED IN COMPLIANCE WITH OSHA.
7. PVC CONDUIT, WITH CODE SIZED GROUND, SHALL BE USED UNDERGROUND ONLY, IF APPROVED BY LOCAL CODE. INSTALL PER LOCAL CODE REQUIREMENTS. CONDUIT RISERS AND STUBS ABOVE GRADE SHALL BE I.M.C. WITH HALF–LAPPED TAPE COVERING OR PVC COATING.
8. CONTRACTOR SHALL PROVIDE ALL LABOR, MATERIALS, INSURANCE, EQUIPMENT, INSTALLATION, CONSTRUCTION TOOLS, TRANSPORTATION, ETC. FOR A COMPLETE AND PROPERLY OPERATING ELECTRICAL SYSTEM.
9. ALL MATERIALS SHALL BE NEW, AND OF THE SAME MANUFACTURER FOR EACH CLASS OR GROUP OF EQUIPMENT. MATERIALS SHALL BE LISTED AND APPROVED BY THE UNDERWRITER'S LABORATORIES, AND SHALL BEAR THE INSPECTION LABEL WHERE SUBJECT TO SUCH APPROVAL. MATERIAL SHALL MEET WITH THE APPROVAL OF THE DIVISION OF INDUSTRIAL SAFETY, AND ALL GOVERNING BODIES HAVING JURISDICTION. MATERIALS SHALL BE MANUFACTURED IN ACCORDANCE WITH APPLICABLE STANDARDS ESTABLISHED BY A.N.S.I., U.L., N.E.M.A. AND N.B.F.U. INSTALL PER MANUFACTURER'S RECOMMENDATIONS.
10. ALL CONDUIT SHALL BE INSTALLED CONCEALED WHERE PHYSICALLY POSSIBLE. ALL EXPOSED CONDUIT SHALL BE INTERMEDIATE METAL CONDUIT AND INSTALLED PARALLEL TO OR AT RIGHT ANGLES WITH THE BUILDING WALLS. IF VIEWED BY THE PUBLIC, PAINT TO MATCH SURFACE TO WHICH IT IS ATTACHED.
11. CONTRACTOR SHALL CARRY OUT HIS WORK IN ACCORDANCE WITH ALL GOVERNING STATE, COUNTY, LOCAL CODES, O.S.H.A. AND THE CURRENTLY ADOPTED NATIONAL ELECTRICAL CODE (N.E.C.).
12. THE COMPLETE ELECTRICAL SYSTEM SHALL BE GROUNDED IN ACCORDANCE WITH THE CURRENTLY ADOPTED EDITION OF THE NEC, ARTICLE 250.
13. ALL ELECTRICAL PENETRATIONS THROUGH FIRE RATED AREA SEPARATION AND CORRIDOR ASSEMBLIES INCLUDING CONDUITS AND PIPING SHALL BE TIGHTLY AND SOLIDLY SEALED WITH FIRESTOPPING WALLBOARD COMPOUND AND SHALL BE AN APPROVED MATERIAL AS REQUIRED BY LOCAL ENFORCING AGENCY.
14. ELECTRICAL CONTRACTOR SHALL SECURE ALL NECESSARY BUILDING PERMITS, UTILITY CHARGES AND PAY FOR SAME. COORDINATE AND PAY FOR ALL ELECTRICAL SERVICE CHARGES WITH THE BUILDING DEPARTMENT, SERVING UTILITY AND OWNER.
15. COMPLETE JOB SHALL BE GUARANTEED FOR A PERIOD OF ONE (1) YEAR AFTER AFTER DATE OF ACCEPTANCE BY OWNER. ANY WORK, MATERIAL OR EQUIPMENT FOUND TO BE FAULTY DURING THAT PERIOD SHALL BE CORRECTED AT ONCE, UPON WRITTEN NOTIFICATION, AT THE EXPENSE OF THE ELECTRICAL CONTRACTOR.
16. CONDUCTORS SHALL BE CODE GRADE, 600 VOLT CLASS, COPPER (UNLESS NOTED OTHERWISE) MARKED EVERY 24" ALONG IT'S LENGTH SHOWING MANUFACTURER'S NAME, MAXIMUM ALLOWABLE VOLTAGE AND SIZE. GENERAL PURPOSE WIRING SHALL BE SOLID COPPER CONDUCTORS #10 AND SMALLER, STRANDED COPPER CONDUCTORS FOR #8 AND LARGER, TYPE 'THWN'(WET) OR 'THHN'(DRY). FOR SPECIAL PURPOSE WIRE TYPES REFER TO EQUIPMENT MANUFACTURER'S PLANS.
17. ALL CONDUIT ONLY (C.O.) SHALL HAVE A PULL WIRE OR ROPE.
18. USE ONLY COMPETENT AND SKILLED PERSONNEL AND PERFORM ALL WORK, INCLUDING AESTHETIC AS WELL AS ELECTRICAL AND MECHANICAL ASPECTS TO STANDARDS CONSISTENT WITH THE BEST PRACTICES OF THE TRADE.
19. ALL ELECTRICAL SYSTEM CONDUCTORS SHALL BE INSTALLED IN APPROVED RACEWAYS. NON–METALLIC SHEATHED CABLE IS NOT APPROVED.
20. WHERE IT BECOMES NECESSARY TO DRILL INTO OR CUT THROUGH ANY EXISTING SLABS, WALKWAYS OR DRIVES TO PERMIT THE INSTALLATION OF ANY WORK UNDER THIS CONTRACT, OR TO REPAIR ANY DEFECTS THAT MAY APPEAR TO THE EXPIRATION OF THE WARRANTY, SUCH CUTTING AND PATCHING SHALL PERFORMED BY TRADESMAN EXPERIENCED IN THE WORK REQUIRED. CONTRACTOR SHALL PAY FOR ALL COSTS REQUIRED FOR CUTTING OR REPAIRING. ALL FINISHES SHALL MATCH EXISTING OR NEW ADJACENT SURFACES.
21. ALL BROCHURES, OPERATING MANUALS, CATALOGS, ETC. SHALL BE TURNED OVER TO THE OWNER AT JOB COMPLETION.
22. ALL SUBSTITUTIONS SHALL BE SUBMITTED IN WRITING TO THE ARCHITECT TEN (10) DAYS PRIOR TO BID. SUBMITTAL SHALL INCLUDE, BUT NOT BE LIMITED TO, COST SAVINGS, WRITTEN REASON FOR SUBSTITUTION AND A WRITTEN STATEMENT THAT IF THE SUBSTITUTION IS APPROVED, THERE WILL BE NO DELAY IN DELIVERY, CONSTRUCTION TIME OR COST TO OTHER TRADES.
23. PROVIDE ENGRAVED PLASTIC NAMEPLATES FOR ALL MAJOR PIECES OF EQUIPMENT. PLATES SHALL BE 3 PLY, BLACK FACE, WHITE CORE WITH 1/4" HIGH CONDENSED GOTHIC LETTERING. SCREW–ON ATTACHMENT ONLY. NO CEMENT.
24. PROVIDE THE OWNER WITH ONE (1) SET OF COMPLETE ELECTRICAL "AS–BUILTS" AT THE COMPLETION OF THE JOB, SHOWING ACTUAL DEPTHS AND LOCATIONS.
25. WHERE A CONFLICT OCCURS BETWEEN THESE DRAWINGS AND THE SPECIFICATIONS ISSUED AS PART OF THESE DOCUMENTS, THE MORE STRINGENT REQUIREMENTS SHALL PREVAIL.
26. COORDINATE ALL ELECTRICAL WORK WITH OTHER TRADES. THE OWNER WILL MAKE NO SUBSEQUENT ALLOWANCE FOR ELECTRICAL WORK REQUIRED BY OTHER TRADES. OBTAIN ALL OTHER PERTINENT INFORMATION REQUIRED TO MEET ACTUAL BUILDING OR FIELD CONDITIONS.
27. ALL FINAL CONNECTIONS TO OWNER–FURNISHED EQUIPMENT SHALL BE MADE BY THE CONTRACTOR. CONNECTIONS TO ALL EQUIPMENT FURNISHED BY OTHERS SHALL BE COORDINATED. THE CONTRACTOR SHALL BE RESPONSIBLE FOR COORDINATION WITH EQUIPMENT MANUFACTURER PRIOR TO ROUGHING IN ALL CONDUIT TO THIS EQUIPMENT.
28. NOTIFY THE OWNER'S REPRESENTATIVE WHEREVER A DISCREPANCY IN QUANTITY OR SIZE OF CONDUIT, WIRE, EQUIPMENT DEVICES, CIRCUIT BREAKERS, TRANSFORMERS, GROUND FAULT PROTECTION SYSTEMS, ETC. (ALL MATERIALS) THAT ARISE ON THE DRAWINGS AND/OR SPECIFICATIONS. PROVIDE AND INSTALL ALL MATERIAL AND SERVICES REQUIRED BY THE STRICTEST CONDITIONS NOTED ON DRAWINGS AND/OR IN THE SPECIFICATIONS TO INSURE COMPLETE AND OPERABLE SYSTEMS AS REQUIRED BY THE OWNER AND ENGINEER.
29. ALL FEEDER AND BRANCH CIRCUITS SHALL BE PROVIDED WITH AN EQUIPMENT GROUNDING CONDUCTOR SIZED PER NEC, AND RUN IN THE SAME RACEWAY OR CONDUIT SUPPLYING SUCH FEEDER OR BRANCH CIRCUIT.
30. TRENCH AND BACKFILL AS REQUIRED TO PERFORM UNDERGROUND WORK. USE EXTREME CAUTION WHEN TRENCHING SO AS NOT TO INTERFERE WITH EXISTING UNDERGROUND UTILITIES. REPAIR ANY DAMAGE CAUSED BY UNDERGROUND TRENCHING.
31. PATCH AND REPAIR WALLS OR CEILINGS WHICH HAVE BEEN DAMAGED BECAUSE OF ELECTRICAL WORK.
32. CONDUIT SHALL NOT BE RUN THROUGH ANY STRUCTURAL MEMBER OF THE BUILDING, EXCEPT AS SPECIFICALLY DIRECTED BY THE OWNER'S REPRESENTATIVE. UNDER NO CIRCUMSTANCE SHALL CONDUIT RUN THROUGH COLUMNS, FOOTINGS OR GRADE BEAMS.
33. FOR ADDITIONAL ROUGH–IN AND WIRING REQUIREMENTS SEE MANUFACTURER'S INSTALLATION PLANS, WHICH ARE SUPPLEMENTAL TO AND PART OF THE ELECTRICAL WORK.
34. EXACT ROUTING OF ALL FEEDERS, CONDUITS, ETC. SHALL BE FIELD VERIFIED AND APPROVED BY OWNER'S REPRESENTATIVE PRIOR TO INSTALLATION. COORDINATE THE INSTALLATION WITH OTHER TRADES.
35. REFER TO ARCHITECTURAL PLANS FOR LOCATIONS OF RECESSED, SURFACE OR PENDANT MOUNTED LIGHT FIXTURES.
36. COLD WATER PIPE GROUNDING BOND SHALL BE LOCATED WITHIN 5' OF BUILDING ENTRANCE.
37. CONTRACTOR SHALL VERIFY EXACT LOADS OF HVAC EQUIP. WITH MECHANICAL ENGINEER AND HVAC UNIT MANUFACTURER PRIOR TO START OF WORK. IN CASE OF ANY DISCREPANCIES OR POTENTIAL CONFLICTS, INFORM ARCHITECT AND ELECTRICAL ENGINEER IN WRITING PRIOR TO PROCEEDING ANY FURTHER.
38. PIPES, DUCTS AND CONDUITS SHALL BE SUPPORTED AND BRACED PER THE S.M.A.C.N.A. "GUIDELINES FOR SEISMIC RESTRAINT OF MECHANICAL SYSTEMS AND PLUMBING AND PIPING SYSTEMS".
39. ALL ELECTRICAL EQUIPMENT SHALL BE BRACED OR ANCHORED TO RESIST A HORIZONTAL FORCE ACTING IN ANY DIRECTION USING THE FOLLOWING CRITERIA:
    A. EQUIPMENT ON GRADE – 20% OF OPERATING WEIGHT
    B. EQUIPMENT ON STRUCTURE – 30% OF OPERATING WEIGHT
    C. FOR FLEXIBLY MOUNTED EQUIPMENT USE FOUR (4) TIMES THE ABOVE VALUES, AND FOR SIMULTANEOUS VERTICAL FORCE USE ONE–THIRD (1/3) TIMES THE HORIZONTAL FORCE.
    D. THE ABOVE VALUES ARE FOR AN IMPORTANCE FACTOR I = 1.0 AND SEISMIC ZONE Z = 0.4
    E. WHERE ANCHORAGE DETAILS ARE NOT SHOWN ON THE DRAWINGS THE FIELD INSTALLATION SHALL BE SUBJECT TO THE APPROVAL OF THE STRUCTURAL ENGINEER AND THE FIELD INSPECTOR.
40. ALL OUTLET RATINGS SHALL BE 20 AMPS, UNLESS NOTED OTHERWISE.

ABBREVIATIONS

A	AMPS
AF	AMP FUSE (SIZE), AMP FRAME (SIZE)
AFCI	ARC FAULT CURRENT INTERRUPT
AFF	ABOVE FINISH FLOOR
AS	AMP SWITCH (SIZE)
BC	BARE COPPER
C	CONDUIT
CB	CIRCUIT BREAKER
CIR	CIRCUIT
CO	CONDUIT ONLY, WITH PULL LINE
CU	COPPER
EDF	ELECTRIC DRINKING FOUNTAIN
EM	EMERGENCY POWER
EMT	ELECTRICAL METALLIC TUBING
EX	EXISTING
EXP	EXPLOSION PROOF
F	FUSE
G	GROUND CONDUCTOR
GFI	GROUND FAULT INTERRUPT PROTECTION
GND	GROUND
I.G.	ISOLATED GROUND
IMC	INTERMEDIATE METALLIC CONDUIT
ISC	INTERRUPTING SHORT CIRCUIT
LCL	LONG CONTINUOUS LOAD
MAX	MAXIMUM
MCB	MAIN CIRCUIT BREAKER
MIN	MINIMUM
MLO	MAIN LUGS ONLY
NA	NON–AUTOMATIC
NEC	NATIONAL ELECTRICAL CODE
NKE	NO KNOWN EQUAL; NO SUBSTITUTES
NOM	NOMINAL
NTS	NOT TO SCALE
P	POLE
PH OR ø	PHASE
PNL	PANEL
PVC	POLYVINYL CHLORIDE
REQ'D	REQUIRED
RGS	RIGID GALVANIZED STEEL
SFM	STATE FIRE MARSHAL
SWBD	SWITCHBOARD
SWGR	SWITCHGEAR
TYP	TYPICAL, UNLESS NOTED OTHERWISE, OF MANY
U.O.N.	UNLESS OTHERWISE NOTED OR INDICATED
V	VOLTS
WP	WEATHERPROOF
X	EXISTING TO REMAIN
XL	EXISTING TO BE RELOCATED
XN	NEW LOCATION OF RELOCATED EQUIPMENT
XR	EXISTING TO BE REMOVED
XFMR	TRANSFORMER

FIRE ALARM DEFERRED APPROVAL NOTES

1. THE FIRE ALARM SYSTEM DRAWINGS WHEN REQUIRED SHALL BE PROVIDED BY THE FIRE ALARM CONTRACTOR UNDER A DEFERRED APPROVAL PROCESS.
2. FIRE ALARM SHOP DRAWINGS SHALL BE SUBMITTED TO THE STATE FIRE MARSHAL OR LOCAL FIRE DEPARTMENT (AS DETERMINED BY THE LOCAL AUTHORITY HAVING JURISDICTION) FOR APPROVAL WITHIN 14 CALENDAR DAYS AFTER NOTICE TO PROCEED. THE FIRE ALARM SHOP DRAWINGS SHALL CONTAIN THE FOLLOWING REQUIREMENTS:
   A. INDICATE WHAT TYPE OF SYSTEM IS BEING PROVIDED
   B. PROVIDE CATALOG DATA, SFM LISTING NUMBER, AND MODEL NUMBER FOR EVERY FIRE ALARM SYSTEM COMPONENT.
   C. PROVIDE SINGLE LINE, RISER AND POINT–TO–POINT WIRING DIAGRAMS.
   D. AN EMERGENCY WARNING SYSTEM WITH VISUAL STROBE DEVICES IS REQUIRED FOR THE HEARING IMPAIRED.
   E. INDICATE THE CONDUIT SIZES, QUANTITY AND TYPE CONDUCTORS, AND WHETHER THE SYSTEM IS POWER LIMITED OR NON–POWER LIMITED.
   F. PROVIDE BATTERY CALCULATIONS FOR THE ENTIRE SYSTEM (24 HOUR STANDBY, 5 MINUTE ALARM TIME).
   G. PROVIDE FLOOR PLANS SHOWING LOCATIONS OF ALL FIRE ALARM EQUIPMENT. INTERCONNECT WIRING, REMOTE POWER SUPPLIES AND ANNUNCIATORS.
   H. INDICATE WHETHER THE SYSTEM IS INDEPENDENT OR INTERCONNECTED TO THE EXISTING FIRE ALARM SYSTEM.
   I. PROVIDE VOLTAGE DROP CALCULATIONS FOR THE LONGEST RUN AND THE CIRCUITS WITH THE LARGEST LOAD REQUIRED FOR BOTH INITIATION AND SIGNAL CIRCUITS.
3. THE WORK SHALL NOT BE STARTED UNTIL THE DETAILED DRAWINGS, SPECIFICATIONS, AND ENGINEERING CALCULATIONS HAVE BEEN ACCEPTED AND APPROVED BY THE STATE FIRE MARSHAL OR LOCAL FIRE DEPARTMENT (AS DETERMINED BY THE LOCAL AUTHORITY HAVING JURISDICTION). CONTRACTOR SHALL PROVIDE APPROVED COPY TO THE ARCHITECT.

NOT FOR BID

STK ARCHITECTURE, INC.
42095 ZEVO DR., TEMECULA, CALIFORNIA 92590-3780
Phone: 951.296.9110 Fax: 951.296.6079 Email: stk@stkinc.com

CONSULTANT:
SALASO'BRIEN | expect a difference |
3220 EXECUTIVE RIDGE
SUITE 210
VISTA, CA 92081
TEL: (760) 560-0100
#21189
ED ES SS NP
www.salasobrien.com
E-Mail admin@tsqeng.com

PROJECT ADMINISTERED BY:
SAN BERNARDINO COUNTY PROJECT & FACILITIES MANAGEMENT DEPARTMENT

385 N. ARROWHEAD AVE.
SAN BERNARDINO, CA 92415

PROJECT NAME:
SAN BERNARDINO COUNTY FIRE DEPARTMENT:
FIRE STATION 226

PROJECT # 10.10.1032
CIP #21-037
CAFM # SAB198
APN # 0273-011-22

1920 DEL ROSA AVE N.
SAN BERNARDINO,
CA 92404

ISSUE INFORMATION:

DATE:	INFORMATION:
04-11-2022	20% CD SET
04-28-2022	50% CD SET
06-15-2022	95% CD SET
09-16-2022	95% CD- 3rd BAY
10-03-2022	PLAN CHECK

SHEET INFORMATION:
STK PROJECT NO.: 374-154-21
SCALE: AS NOTED
DATE: JANUARY 2021
PLOT DATE: –
DRAWING NAME:

SEAL:
REGISTERED PROFESSIONAL ENGINEER
EDUARDO A. DAVID
No. E18809
Exp. 6/30/23
ELECTRICAL
STATE OF CALIFORNIA

SHEET TITLE:
ELECTRICAL LEGEND AND GENERAL NOTES

SHEET NO.:
E0.1

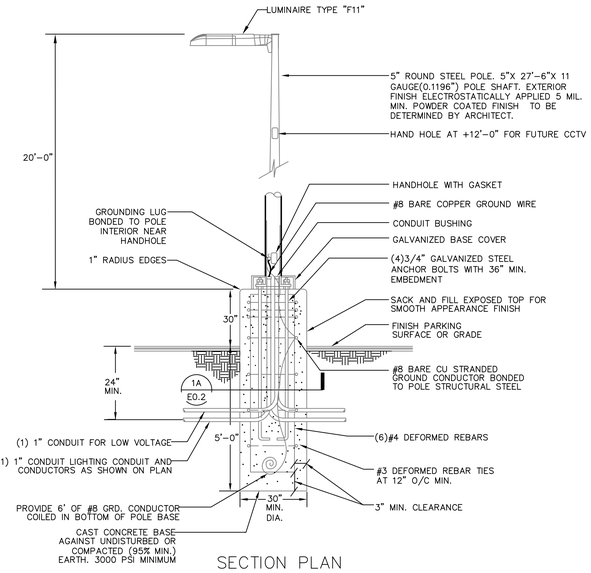

SECTION PLAN

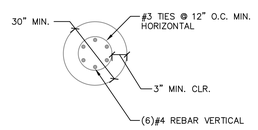

BASE PLAN

FOOTING BASE PLAN 1A

NTS

NOTE: POLE BASE DIMENSIONS AND ANCHORING HARDWARE SHALL BE APPROVED BY THE STRUCTURAL ENGINEER OF RECORD PRIOR TO INSTALLATION.

SCALE: NONE

FIXTURE TYPE "S1" DETAIL 1

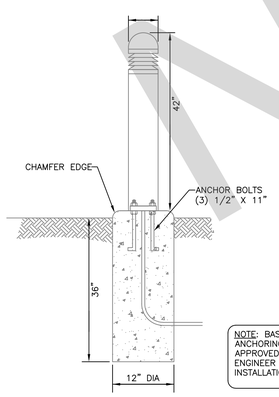

NOTE: BASE DIMENSIONS AND ANCHORING HARDWARE SHALL BE APPROVED BY THE STRUCTURAL ENGINEER OF RECORD PRIOR TO INSTALLATION.

SCALE: NONE

FIXTURE TYPE "S2" DETAIL 2

LIGHTING CONTROL PANEL 'LCP'

RELAY #	PANEL	CIR #	VOLTS	SERVES	CONTROL	BLDG. SHUT-OFF CONTROL BY
1	B	1	208	POLE LIGHTING	PHOTOCELL "ON", TIMECLOCK "OFF"	NONE
2	B	3	208	–	–	–
3	B	5	120	MONUMENT SIGN	PHOTOCELL "ON", TIMECLOCK "OFF"	NONE
4	B	7	120	FLAGPOLE, BOLLARD LIGHTING	PHOTOCELL "ON", TIMECLOCK "OFF"	NONE
5	B	9b	120	ENTRY CANOPY LIGHTING	PHOTOCELL "ON", TIMECLOCK "OFF"	NONE
6	B	9y	120	REAR WALL SCONCE LIGHTING	PHOTOCELL "ON", TIMECLOCK "OFF"	NONE
7	–	–	–	SPARE		
8	–	–	–	SPARE		
NORMAL-EMERGENCY BARRIER						
9	B	1v	120	APP BAY FRONT EXTERIOR LIGHTING	PHOTOCELL "ON", TIMECLOCK "OFF"	NONE
10	B	1w	120	APP BAY REAR EXTERIOR LIGHTING	PHOTOCELL "ON", TIMECLOCK "OFF"	NONE
11	B	11y	120	SIDE EXIT DOOR LIGHT	PHOTOCELL "ON", TIMECLOCK "OFF"	NONE
12	–	–	–	SPARE		

LIGHTING MATRIX CONTROL SYSTEM NOTES:

1. PROVIDE THE LIGHTING CONTROL SYSTEM WITH AN INTEGRAL ELECTRONIC SOLID-STATE, 365 DAY PROGRAMMABLE, MULTI-CHANNEL, TIME SWITCH WITH INTEGRAL BACKUP POWER (MINIMUM 90 MINUTES).
2. PROVIDE (1) PHOTOCELL ON ROOF FOR CONTROL OF SITE LIGHTING AND RED LIGHTS.

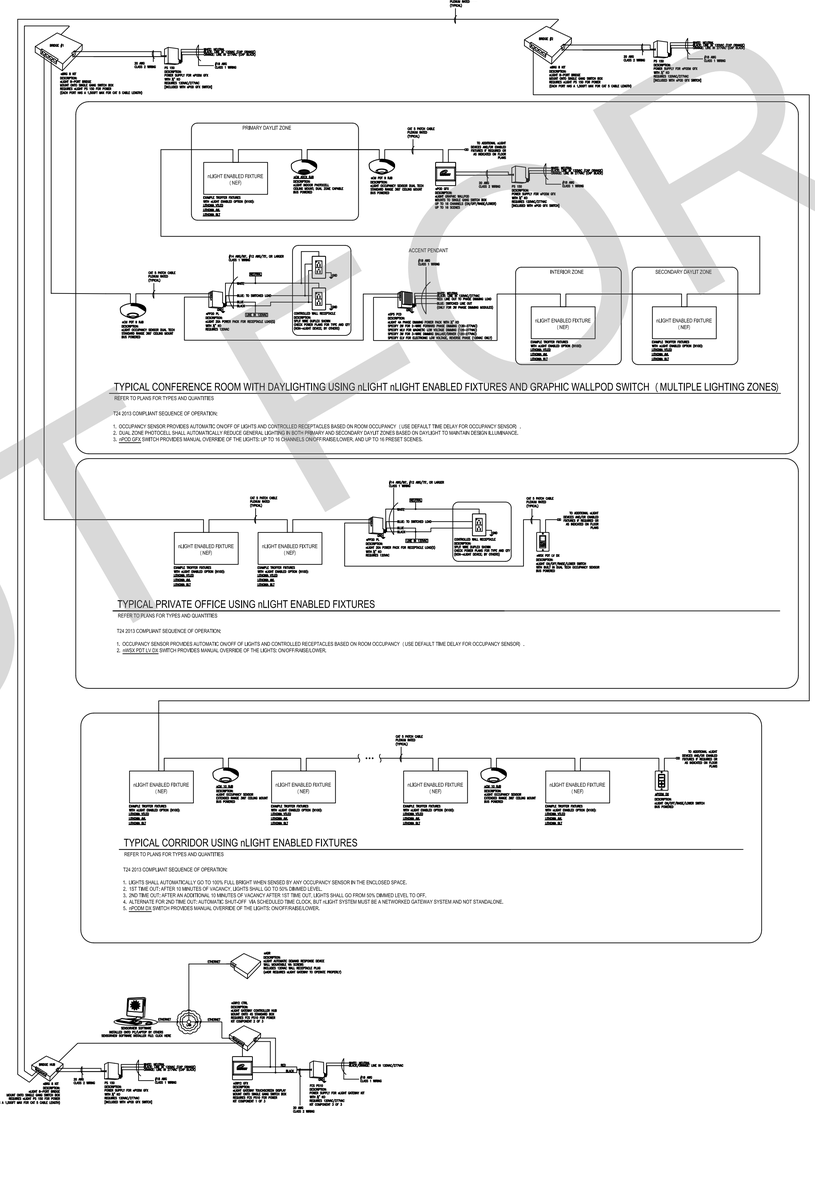

SCALE: NONE

LIGHTING CONTROLS DIAGRAM 4

LIGHTING FIXTURE SCHEDULE

FIXT DES	SYMBOL	LAMP TYPE	FIXTURE MOUNTING	LAMP DESC	WATTS	VOLTS	MFR/CATALOG	DESCRIPTION
F1		LED	WALL PER ARCH	54W LED 4000K 6256 LUMENS	54	120	LIGMAN LIGHTING UTR-31712-54W-T4 W40-01-120/277-DIM-OCC	WALL MOUNTED LED AREALIGHT FIXTURE, BLACK FINISH, REMOTE SENSOR CONTROL AT 15', WET LOCATION LISTED, SEE ARCHITECTURAL DRAWINGS FOR FINAL LOCATION
F2		LED	SURFACE	42W LED 4000K 4042 LUMENS	42	120	DAY-BRITE CFI FSSEZ-4-40L-840L UNV-DIM	4' LED STRIPLIGHT WITH NON-DIMMING ELECTRONIC DRIVER
F3		LED	SURFACE	33W LED 4000K 3665 LUMENS	33	120	DAY-BRITE CFI FSS-4-40L-840-UNV-DIM	4' LED INDUSTRIAL LIGHT FIXTURE, PRISMATIC ACRYLIC LENS, END CAP AND 0-10V DIMMABLE ELECTRONIC DRIVER
F3E		LED	SURFACE	33W LED 4000K 3665 LUMENS	33	120	PHILIPS DAYBRITE LFR4-FL-SLD-37-40-U-DZT-EMLED	4' LED INDUSTRIAL LIGHT FIXTURE, PRISMATIC ACRYLIC LENS, END CAP, 0-10V DIMMABLE ELECTRONIC DRIVER AND 1100 LUMEN EMERGENCY BATTERY PACK
F4		LED	RECESSED	17W LED 3500K 1599 LUMENS	17	120	PHILIPS LIGHTOLIER L6RAZ10UVA-L6R15835-L6RDW	6" DIAMETER RECESSED LED DOWN LIGHT, IC RATED HOUSING, OPEN WHITE TRIM AND 0-10V DIMMABLE ELECTRONIC DRIVER
F5		LED	UNDER CABINET	10W LED 4000K 479 LUMENS	10	120	PHILIPS COLOR KINETICS 523-000027-76-120-000065-00	19.25" LED UNDER COUNTER LIGHT, WHITE HOUSING AND WHITE HARD WIRED WIRING COMPARTMENT. PROVIDE A COMPLETE AND OPERABLE SYSTEM
F6		LED	RECESSED	17W LED 3500K 1599 LUMENS	17	120	PHILIPS LIGHTOLIER L6RAZ10UVA-L6R15835-L6RDD	6" DIAMETER RECESSED LED DOWN LIGHT, IC RATED HOUSING, OPEN CLEAR DIFFUSE FINISH, WHITE TRIM AND 0-10V DIMMABLE ELECTRONIC DRIVER, FIRE RATED COVERS WHERE NECESSARY
F6E		LED	RECESSED	17W LED 3500K 1599 LUMENS	17	120	PHILIPS LIGHTOLIER L6RAZ10UVAEM-L6R15835-L6RDD	6" DIAMETER RECESSED LED DOWN LIGHT, IC RATED HOUSING, OPEN CLEAR DIFFUSE FINISH, WHITE TRIM, 0-10V DIMMABLE ELECTRONIC DRIVER AND EMERGENCY BATTERY PACK
F7		LED	RECESSED	17W LED 3500K 1599 LUMENS	17	120	PHILIPS LIGHTOLIER L6RAZ10UVA-L6R15835-L6RDD	6" DIAMETER RECESSED LED DOWN LIGHT, IC RATED HOUSING, OPEN CLEAR DIFFUSE FINISH, WHITE TRIM AND 0-10V DIMMABLE ELECTRONIC DRIVER, WET LISTED
F8		FLUOR	WALL	32W 4000K TWIN TUBE FLUOR	36	120	PHILIPS STONCO VWXL-32-HFL-E8-8-VGR100-V127	WALL MOUNTED COMPACT FLUORESCENT VAPORTIGHT LIGHT, RUBY RED GLOBE, CAST ALUMINUM GUARD AND ELECTRONIC BALLAST
F9		LED	RECESSED	21W LED 3500K DN	21	120	PHILIPS LIGHTOLIER P6RD20NZ10UVB-P6RD835VB-P6RDCC	6" DIAMETER RECESSED LED DOWN LIGHT, CLEAR REFLECTOR, WHITE TRIM, 0-10V DIMMABLE ELEC DRIVER
F10		LED	RECESSED	15.7W LED 3500K 1501 LUMENS	15.7	120	PHILIPS LIGHTOLIER P6RD15NZ10UVBEM-P6RD835VB-P6RDCC	6" DIAMETER RECESSED LED DOWN LIGHT, LENSED COMFORT CLEAR FINISH, WHITE TRIM, 0-10V DIMMABLE ELECTRONIC DRIVER, WET LOCATION LISTED AND EMERGENCY BATTERY PACK
F11		LED	20' TALL 4" SQUARE POLE 24" DIA X 30" HIGH CONC BASE	104W 5000K 12,357 LUMENS	104	208	SIGNIFY ECF-S-32L-1A-NW-G2-AR-5-UNV-BL-IMR13-BZ	POLE MOUNTED LED SITE LIGHT FIXTURE, FULL CUTOFF, TYPE 5 MEDIUM OPTICS, INTEGRAL MOTION-AMBIENT SENSOR AND DARK BRONZE FINISH
F12		LED	WALL	34W LED 4000K 1358 LUMENS	34	120	ALN440-Y3-32LED4K-700-BL-LDL-WMA55-BL-SCP	WALL MOUNTED LED LIGHT FIXTURE, WHITE HOUSING, WET LOCATION LISTED, SEE ARCHITECTURAL DRAWINGS FOR FINAL LOCATION
F13		LED	WALL	34W LED 4000K 1358 LUMENS	34	120	PHILIPS STONCO VR2RLED-40K-D0-WT	WALL MOUNTED LED LIGHT FIXTURE, WHITE HOUSING, WET LOCATION LISTED, SEE ARCHITECTURAL DRAWINGS FOR FINAL LOCATION
F14		LED	CHAIN HUNG	38W LED 4000K 4431 LUMENS	38	120	PHILIPS DAYBRITE DWPE-43L-840-4-UNV-TBK-FKR-126	4' LED INDUSTRIAL GASKETED LIGHT FIXTURE, POLYCARBONATE LENS, END CAP, SURFACE OR CHAIN HUNG AS DIRECTED BY ARCHITECT AND 0-10V DIMMABLE ELECTRONIC DRIVER
F15		LED	PENDANT	21W LED 3500K 2027 LUMENS	21	120	PHILIPS LIGHTOLIER P6RD20NZ10UVB-P6RD835VB-P6RDCC	6" DIAMETER RECESSED LED DOWN LIGHT, LENSED COMFORT CLEAR FINISH, WHITE TRIM, 0-10V DIMMABLE ELEC DRIVER AND WET LOCATION LISTED
F16		LED	GRADE	18W LED 3000K 25 DEGREE SPREAD	18	120	VISTA PRO MODEL 1188	INGROUND & WELL LIGHT FLAG POLE, WET LOCATION LISTED LIGHT FIXTURE WITH REMOTE ELECTRONIC DRIVER
F17		LED	WALL	2.5W LED 3000K	2.5	120	PHILIPS CONSUMER LUMINAIRE 667048748	ADJUSTABLE WALL MOUNTED LED READING LIGHT FIXTURE WITH INTEGRAL SWITCH
F18		LED	RECESSED	27.9W LED 3500K 2739 LUMENS	27.9	120	SIGNIFY D122D1-ST-L8B-E-S-7-D-E	2 X 2 RECESSED MOUNTED LED LIGHT FIXTURE, WHITE HOUSING WITH 0-10V DIMMABLE ELECTRONIC DRIVER
F18E		LED	RECESSED	27.9W LED 3500K 2739 LUMENS	27.9	120	SIGNIFY D122D1-ST-L8B-E-S-N-D-E	2 X 2 RECESSED MOUNTED LED LIGHT FIXTURE, WHITE HOUSING, 0-10V DIMMABLE ELECTRONIC DRIVER AND 900 LUMEN EMERGENCY BATTERY PACK
F19		LED	SURFACE	38W LED 4000K 4431 LUMENS	38	120	PHILIPS DAYBRITE DWAE43L840-4-UNV	1'x4' SURFACE MOUNTED LED LIGHT FIXTURE, WHITE VAPORTIGHT HOUSING, 0-10V DIMMABLE ELECTRONIC DRIVER AND WET LOCATION LISTED
F20		LED	SURFACE	130W LED 4000K 14660 LUMENS	130	120	PHILIPS DAYBRITE DWAE70L840-8-UNV	1'x8' SURFACE MOUNTED LED LIGHT FIXTURE, WHITE VAPORTIGHT HOUSING, 0-10V DIMMABLE ELECTRONIC DRIVER AND WET LOCATION LISTED
F20E		LED	SURFACE	130W LED 4000K 14660 LUMENS	130	120	PHILIPS DAYBRITE DWAE70L840-8-UNV-EMLED	1'x8' SURFACE MOUNTED LED LIGHT FIXTURE, WHITE VAPORTIGHT HOUSING, 0-10V DIMMABLE ELECTRONIC DRIVER, WET LOCATION LISTED WITH EMERGENCY BATTERY PACK
F21		N/A	CEILING	N/A	50	120	HUNTER CEILING PER ARCHITECT REMOTE FAN CONTROL 22691	CEILING FAN WITH 52" BLADE, WHITE SATIN FINISH AND ONE (1) REMOTE CONTROL UNIT
F23		LED	BOLLARD	60W LED 3500K 200 LUMENS	25	120	LUCIFER LIGHTING IS2LB-2-BK-80L04B-35K-120AT2-CP	LED FREE STANDING BOLLARDS.
E1		LED	SURFACE	2.5W LED	2.5	120	PHILIPS CHLORIDE ER46L2R	LED EXIT SIGN, BLACK HOUSING, RED LETTERS WITH INTEGRAL EMERGENCY BATTERY PACK
F24		LED	RECESSED	27.9W LED 3500K 2739 LUMENS	27.9	120	PHILIPS LEDALITE 4124-S1ST-L8BE-S-7-DE	2 X 4 RECESSED MOUNTED LED LIGHT FIXTURE, WHITE HOUSING WITH 0-10V DIMMABLE ELECTRONIC DRIVER
F24E		LED	RECESSED	27.9W LED 3500K 2739 LUMENS	27.9	120	PHILIPS LEDALITE 4124-S1ST-L8BE-S-7/5-DE	2 X 4 RECESSED MOUNTED LED LIGHT FIXTURE, WHITE HOUSING, 0-10V DIMMABLE ELECTRONIC DRIVER AND 900 LUMEN EMERGENCY BATTERY PACK
F25		LED	PENDANT	38W LED 3000K 2660 LUMENS	38	120	STUDIOM LIGHTING ABYSS SM250086BK	THESE CLASSIC CONE PENDANTS IN MATTE BLACK THESE PENDANTS ARE ILLUMINATED ON THE BOTTOM PERIMETER CREATING A BLACK ABYSS ON THE INSIDE GENERATING AN INTERESTING LIGHTING EFFECT
F26		LED	WALL	–	–		MEYER LIGHTING S151	1-1/4" DIAMETER LED, OUTDOOR LINEAR WALL WASHER.
F27		LED	WALL	–	–		LURA LINE LIGHTING RA11 GNL	11" ANGLED, 11" L-ARM

LIGHTING FIXTURE NOTES:

1. PROVIDE SPECIFIED LIGHTING MANUFACTURER FOR EACH LIGHT FIXTURE. ANY SUBSTITUTIONS SHALL MEET OR EXCEED THE SPECIFICATIONS OF THE LISTED MANUFACTURERS CATALOG NUMBER. PROVIDE CUT SHEETS FOR APPROVAL BY ARCHITECT PRIOR TO PROCUREMENT.
2. COORDINATE ALL FIXTURE COLORS, REFLECTORS, FINISHES, MOUNTING LOCATIONS, POLES AND HEIGHTS WITH ARCHITECT PRIOR TO PROCUREMENT.

NOT FOR BID

STK ARCHITECTURE, INC.
42055 ZEVO DR., TEMECULA, CALIFORNIA 92590-3780
Phone: 951.296.9110 Fax: 951.296.6079 Email: stk@stkinc.com

CONSULTANT:

SALASOBRIEN [expect a difference]
3220 EXECUTIVE RIDGE
SUITE 210
VISTA, CA 92081
TEL: (760) 560-0100
#21189
09-28-22
www.salasobrien.com
E-Mail: admin@tsigeng.com
ED | ES | SS | NP

PROJECT ADMINISTERED BY:
SAN BERNARDINO COUNTY
PROJECT & FACILITIES
MANAGEMENT DEPARTMENT

385 N. ARROWHEAD AVE.
SAN BERNARDINO, CA 92415

PROJECT NAME:
SAN BERNARDINO COUNTY FIRE DEPARTMENT:
FIRE STATION 226

PROJECT # 10.10.1032
CIP #21-037
CAFM # SAB198
APN # 0273-011-22

1920 DEL ROSA AVE N.
SAN BERNARDINO,
CA 92404

ISSUE INFORMATION:

DATE:	INFORMATION:
04-11-2022	20% CD SET
04-28-2022	50% CD SET
06-15-2022	95% CD SET
09-16-2022	95% CD- 3rd BAY
10-03-2022	PLAN CHECK

SHEET INFORMATION:
STK PROJECT NO.: 374-154-21
SCALE: AS NOTED
DATE: JANUARY 2021
PLOT DATE: –
DRAWING NAME:

SEAL:

SHEET TITLE:
ELECTRICAL SCHEDULES

SHEET NO.:
E0.2

T:_2021\21189 San Bernardino County FS 226\Elec\21189_E0.2.dwg
09/28/2022 7:50AM

STATE OF CALIFORNIA
Outdoor Lighting
NRCC-LTO-E
CALIFORNIA ENERGY COMMISSION

CERTIFICATE OF COMPLIANCE			**NRCC-LTO-E**
Project Name:	San bernardino County Fire Department: Fire Station 226	**Report Page:**	**(Page 7 of 8)**
Project Address:	1920 Del Rosa Ave, North	**Date Prepared:**	6/13/2022

P. DECLARATION OF REQUIRED CERTIFICATES OF ACCEPTANCE

Selections have been made based on information provided in this document. If any selection have been changed by permit applicant, an explanation should be included in Table E. Additional Remarks. These documents must be provided to the building inspector during construction and must be completed through an Acceptance Test Technician Certification Provider (ATTCP). For more information visit: http://www.energy.ca.gov/title24/attcp/providers.html

Yes	No	Form/Title	Field Inspector Pass	Field Inspector Fail
○	●	NRCA-LTO-02-A - Must be submitted for all outdoor lighting controls except for alterations where controls are added to <= 20 luminaires.	☐	☐

Registration Number: Registration Date/Time: Registration Provider: Energysoft

CA Building Energy Efficiency Standards - 2019 Nonresidential Compliance Report Version: 2019.1.003 Schema Version: rev 20200601 Report Generated: 2022-06-13 17:27:11

STATE OF CALIFORNIA
Outdoor Lighting
NRCC-LTO-E
CALIFORNIA ENERGY COMMISSION

CERTIFICATE OF COMPLIANCE			**NRCC-LTO-E**
Project Name:	San bernardino County Fire Department: Fire Station 226	**Report Page:**	**(Page 4 of 8)**
Project Address:	1920 Del Rosa Ave, North	**Date Prepared:**	6/13/2022

F. OUTDOOR LIGHTING FIXTURE SCHEDULE

For new or altered lighting systems demonstrating compliance with §140.7 all new luminaires being installed and any existing luminaires remaining or being moved within the spaces covered by the permit application are included in the Table below. For altered lighting systems using the Existing Power method per §141.0(b)2L only new luminaires being installed and replacement luminaires being installed as part of the project scope are included (ie, existing luminaires remaining or existing luminaires being moved are not included).

Designed Wattage:

01	02	03	04	05	06	07	08	09	10

4 Compliance with mandatory cutoff requirements is required for luminaires with initial lumen output >= 6,200 unless exempted by §130.2(b)

G. CUTOFF REQUIREMENTS (BUG)

This section does not apply to this project.

H. OUTDOOR LIGHTING CONTROLS

This table demonstrates compliance with controls requirements for all new or altered luminaires installed as part of the permit application. For alteration projects, luminaires which are existing to remain (ie untouched) and luminaires which are removed and reinstalled (wiring only) do not need to be included in this table even if they are within the spaces covered by the permit application.
*When an option having a * is selected, the notes section of this table must be completed. The lighting controls section of the Compliance Summary Table on the first page will show "DOES NOT COMPLY" if the notes are left blank.*

Mandatory Controls

01	02	03	04	05	
Area Description	Shut-Off §130.2(c)1	Auto-Schedule §130.2(c)2	Motion Sensor §130.2(c)3	Field Inspector Pass	Field Inspector Fail

** NOTES: Controls with a * require a note in the space below explaining how compliance is achieved.*
EX: Not permitted by health & safety to be turned off; EXCEPTION 1 to §130.2(c)

Registration Number: Registration Date/Time: Registration Provider: Energysoft

CA Building Energy Efficiency Standards - 2019 Nonresidential Compliance Report Version: 2019.1.003 Schema Version: rev 20200601 Report Generated: 2022-06-13 17:27:11

STATE OF CALIFORNIA
Outdoor Lighting
NRCC-LTO-E
CALIFORNIA ENERGY COMMISSION

CERTIFICATE OF COMPLIANCE			**NRCC-LTO-E**
Project Name:	San bernardino County Fire Department: Fire Station 226	**Report Page:**	**(Page 1 of 8)**
Project Address:	1920 Del Rosa Ave, North	**Date Prepared:**	6/13/2022

A. GENERAL INFORMATION

01	Project Location (city)	San Bernardino	04	Total Illuminated Hardscape Area (ft^2)	9600
02	Climate Zone	10			
03	Outdoor Lighting Zone per Title 24 Part 1 §10.114 or as designated by Authority Having Jurisdiction (AHJ):				
☐	LZ-0: Very Low - Undeveloped Parkland	☐	LZ-2: Moderate - Rural Areas	☐	LZ-4: High - Must be reviewed by CA Energy Commission for Approval
☐	LZ-1: Low - Developed Parkland	☒	LZ-3: Moderately High - Urban Areas		

B. PROJECT SCOPE

This table includes outdoor lighting systems that are within the scope of the permit application and are demonstrating compliance using the prescriptive path outlined in §140.7 or §141.0(b)2L for alterations.

My Project Consists of:

01		02	
☒ New Lighting System		Must Comply with Allowances from §140.7	
☐ Altered Lighting System		Is your alteration increasing the connected lighting load (Watts)?	○ Yes ○ No
03		04	05
% of Existing Luminaires Being Altered[1]		Sum Total of Luminaires Being Added or Altered	Calculation Method
☐ < 10% ☐ >= 10% and < 50% ☐ >= 50%			

Please proceed to Table F. Outdoor Lighting Fixture Schedule to define the project's luminaires.

[1] FOOTNOTES: % of Existing Luminaires Being Altered = (Sum Total of Luminaires Being Added or Altered / Existing Luminaires within the Scope of the Permit Application) x 100.

Registration Number: Registration Date/Time: Registration Provider: Energysoft

CA Building Energy Efficiency Standards - 2019 Nonresidential Compliance Report Version: 2019.1.003 Schema Version: rev 20200601 Report Generated: 2022-06-13 17:27:11

STATE OF CALIFORNIA
Outdoor Lighting
NRCC-LTO-E
CALIFORNIA ENERGY COMMISSION

CERTIFICATE OF COMPLIANCE			**NRCC-LTO-E**
Project Name:	San bernardino County Fire Department: Fire Station 226	**Report Page:**	**(Page 8 of 8)**
Project Address:	1920 Del Rosa Ave, North	**Date Prepared:**	6/13/2022

DOCUMENTATION AUTHOR'S DECLARATION STATEMENT

I certify that this Certificate of Compliance documentation is accurate and complete.

Documentation Author Name:	Documentation Author Signature: *Eduardo G Davi*
Company:	Signature Date:
Address:	CEA/ HERS Certification Identification (if applicable):
City/State/Zip:	Phone:

RESPONSIBLE PERSON'S DECLARATION STATEMENT

I certify the following under penalty of perjury, under the laws of the State of California:

1. The information provided on this Certificate of Compliance is true and correct.
2. I am eligible under Division 3 of the Business and Professions Code to accept responsibility for the building design or system design identified on this Certificate of Compliance (responsible designer)
3. The energy features and performance specifications, materials, components, and manufactured devices for the building design or system design identified on this Certificate of Compliance conform to the requirements of Title 24, Part 1 and Part 6 of the California Code of Regulations.
4. The building design features or system design features identified on this Certificate of Compliance are consistent with the information provided on other applicable compliance documents, worksheets, calculations, plans and specifications submitted to the enforcement agency for approval with this building permit application.
5. I will ensure that a completed signed copy of this Certificate of Compliance shall be made available with the building permit(s) issued for the building, and made available to the enforcement agency for all applicable inspections. I understand that a completed signed copy of this Certificate of Compliance is required to be included with the documentation the builder provides to the building owner at occupancy.

Responsible Designer Name: Ed David	Responsible Designer Signature: *Eduardo G Davi*
Company: T-Squared Professional Engineers, Inc.	Date Signed: 2022-06-13
Address: 1340 Specialty Dr., Suite E	License: E18809
City/State/Zip: Vista CA 92081	Phone: (760) 560-0100

Registration Number: Registration Date/Time: Registration Provider: Energysoft

CA Building Energy Efficiency Standards - 2019 Nonresidential Compliance Report Version: 2019.1.003 Schema Version: rev 20200601 Report Generated: 2022-06-13 17:27:11

STATE OF CALIFORNIA
Outdoor Lighting
NRCC-LTO-E
CALIFORNIA ENERGY COMMISSION

CERTIFICATE OF COMPLIANCE			**NRCC-LTO-E**
Project Name:	San bernardino County Fire Department: Fire Station 226	**Report Page:**	**(Page 5 of 8)**
Project Address:	1920 Del Rosa Ave, North	**Date Prepared:**	6/13/2022

I. LIGHTING POWER ALLOWANCE (per §140.7)

This table includes areas using allowance calculations per §140.7. General Hardscape Allowance is per Table 140.7-A while "Use it or lose it" Allowances are per Table 140.7-B. Indicate which allowances are being used to expand sections for user input. Luminaires that qualify for one of the "Use it or lose it" allowances shall not qualify for another "Use it or lose it" allowance.

01				
☒ General Hardscape Allowance Table I (below)	"Use it or lose it" Allowance (select all that apply) (select all that apply)			
	☐ Per Application Table J	☐ Sales Frontage Table K	☐ Ornamental Table L	☒ Per Specific Area Table M

Calculated General Hardscape Lighting Power Allowance per Table 140.7-A (LZ 0, 1 & 4)
This section does not apply to this project.
Calculated General Hardscape Lighting Power Allowance per Table 140.7-A (LZ 2 & 3)

02	03	04	05	06	07	08	9	10
		Area Wattage Allowance (AWA)			Area Wattage Allowance (AWA)			
Area Description	Surface Type	Illuminated Area (ft^2)	Allowed Density (W/ft^2)	Area Allowance (Watts)	Perimeter Length (lf)	Allowed Density (W/lf)	Linear Allowance (Watts)	Total General AWA + LWA (Watts)
Automotive Hardscape	Asphalt	5100	0.03	127.5	313	0.4	78.25	205.75
Pedestrian Hardscape	Asphalt	4500	0.03	112.5	643	0.4	160.75	273.25
							Initial Wattage Allowance for Entire Site (Watts):	350
							Total General Hardscape Allowance (Watts):	829

J. LIGHTING ALLOWANCE: PER APPLICATION

This section does not apply to this project.

K. LIGHTING ALLOWANCE: SALES FRONTAGE

This section does not apply to this project.

L. LIGHTING ALLOWANCE: ORNAMENTAL

This section does not apply to this project.

Registration Number: Registration Date/Time: Registration Provider: Energysoft

CA Building Energy Efficiency Standards - 2019 Nonresidential Compliance Report Version: 2019.1.003 Schema Version: rev 20200601 Report Generated: 2022-06-13 17:27:11

STATE OF CALIFORNIA
Outdoor Lighting
NRCC-LTO-E
CALIFORNIA ENERGY COMMISSION

CERTIFICATE OF COMPLIANCE			**NRCC-LTO-E**
Project Name:	San bernardino County Fire Department: Fire Station 226	**Report Page:**	**(Page 2 of 8)**
Project Address:	1920 Del Rosa Ave, North	**Date Prepared:**	6/13/2022

C. COMPLIANCE RESULTS

Results in this table are automatically calculated from data input and calculations in Tables F through I. Note: If any cell on this table says "COMPLIES with Exceptional Conditions" refer to Table D. Exceptional Conditions for guidance or see applicable Table referenced below.

Calculations of Total Allowed Lighting Power (Watts) §140.7 or §141.0(b)2L													Compliance Results			
01		02		03		04		05		06		07		08	09
General Hardscape Allowance §140.7(d)1 (See Table I)	+	Per Application §140.7(d)2 (See Table J)	+	Sales Frontage §140.7(d)2 (See Table K)	+	Ornamental §140.7(d)2 (See Table L)	+	Per Specific Area §140.7(d)2 (See Table M)	OR	Existing Power Allowance §141.0(b)2L (See Table N)	=	**Total Allowed** (Watts)	≥	**Total Actual** (Watts)	**07 must be >= 08**
829	+	---	+	---	+	---	+	59.5	OR	---	=	888.5	≥	876.7	COMPLIES
Cutoff Compliance (See Table G for Details)															N/A
Controls Compliance (See Table H for Details)															COMPLIES

D. EXCEPTIONAL CONDITIONS

This table is auto-filled with uneditable comments because of selections made or data entered in tables throughout the form.

E. ADDITIONAL REMARKS

This table includes remarks made by the permit applicant to the Authority Having Jurisdiction.

Registration Number: Registration Date/Time: Registration Provider: Energysoft

CA Building Energy Efficiency Standards - 2019 Nonresidential Compliance Report Version: 2019.1.003 Schema Version: rev 20200601 Report Generated: 2022-06-13 17:27:11

STATE OF CALIFORNIA
Outdoor Lighting
NRCC-LTO-E
CALIFORNIA ENERGY COMMISSION

CERTIFICATE OF COMPLIANCE			**NRCC-LTO-E**
Project Name:	San bernardino County Fire Department: Fire Station 226	**Report Page:**	**(Page 6 of 8)**
Project Address:	1920 Del Rosa Ave, North	**Date Prepared:**	6/13/2022

M. LIGHTING ALLOWANCE: PER SPECIFIC AREA

This table includes areas using the wattage allowance per specific area from Table 140.7-B. More than one specific area allowance may be taken in a single project, if applicable. However, multiple specific area allowances may not be taken for the exact same area on the site.

01	02	03	04	05	06	07	08	09	10
		CALCULATED ALLOWANCE (Watts)			DESIGN WATTS				
Area Description	Specific Area Type per Table 140.7-B	Specific Area (ft^2)[1]	Allowed Density (W/ft^2)	Extra Allowance (Watts)	Luminaire Name or Item Tag	Watts per Luminaire	# of Luminaires	Design Watts	Additional Allowance (Watts)
Building Facade	BuildingFacade	350	0.17	59.5	F12	75	3	225	59.5
							Total Design Watts for this Area:	225	
							Total Allowance (Watts) All Areas:		59.5

[1] FOOTNOTES: See Table 140.7-B for rules for calculating the specific areas (ft^2 for these additional lighting allowances.
[2] For luminaires indicated in Table F as linear, wattage in column 07 is W/lf instead of Watts/luminaire. Total linear feet should be indicated in column 08 instead of number of luminaires.

N. EXISTING CONDITIONS POWER ALLOWANCE (alterations only)

This section does not apply to this project.

O. DECLARATION OF REQUIRED CERTIFICATES OF INSTALLATION

Selections have been made based on information provided in this document. If any selection have been changed by permit applicant, an explanation should be included in Table E. Additional Remarks. These documents must be provided to the building inspector during construction and can be found online at https://www.energy.ca.gov/title24/2019standards/2019_compliance_documents/Nonresidential_Documents/NRCI/

Yes	No	Form/Title	Field Inspector Pass	Field Inspector Fail
●	○	NRCI-LTO-01-E - Must be submitted for all buildings	☐	☐
○	●	NRCI-LTO-02-E- Must be submitted for a lighting control system, or for an Energy Management Control System (EMCS), to be recognized for compliance.	☐	☐

Registration Number: Registration Date/Time: Registration Provider: Energysoft

CA Building Energy Efficiency Standards - 2019 Nonresidential Compliance Report Version: 2019.1.003 Schema Version: rev 20200601 Report Generated: 2022-06-13 17:27:11

STATE OF CALIFORNIA
Outdoor Lighting
NRCC-LTO-E
CALIFORNIA ENERGY COMMISSION

CERTIFICATE OF COMPLIANCE			**NRCC-LTO-E**
Project Name:	San bernardino County Fire Department: Fire Station 226	**Report Page:**	**(Page 3 of 8)**
Project Address:	1920 Del Rosa Ave, North	**Date Prepared:**	6/13/2022

F. OUTDOOR LIGHTING FIXTURE SCHEDULE

For new or altered lighting systems demonstrating compliance with §140.7 all new luminaires being installed and any existing luminaires remaining or being moved within the spaces covered by the permit application are included in the Table below. For altered lighting systems using the Existing Power method per §141.0(b)2L only new luminaires being installed and replacement luminaires being installed as part of the project scope are included (ie, existing luminaires remaining or existing luminaires being moved are not included).

Designed Wattage:

01	02		03	04	05	06	07	08	09	10	
Name or Item Tag	Complete Luminaire Description		Watts per luminaire[1,2]	How is Wattage determined	Total number luminaires[2]	Luminaire Status[3]	Excluded per §140.7(a)	Design Watts	Cutoff Req. > 6,200 initial lumen output §130.2(b)[4]	Field Inspector Pass	Field Inspector Fail
F1	75w LED Wall Mounted Area Light	☐ Linear	75	Mfr. Spec	3	New	☐	225	NA: < 6200 lumens	☐	☐
F10E	15.7w LED Down Light	☐ Linear	15.7	Mfr. Spec	1	New	☐	15.7	NA: < 6200 lumens	☐	☐
F11B	104w LED	☐ Linear	104	Mfr. Spec	1	New	☐	104	NA: < 6200 lumens	☐	☐
F12	75w LED Wall Mounted Area Light	☐ Linear	75	Mfr. Spec	4	New	☐	300	NA: < 6200 lumens	☐	☐
F13	34w Decorative LED Wall Light	☐ Linear	34	Mfr. Spec	1	New	☐	34	NA: < 6200 lumens	☐	☐
F14	38w LED Chain Hung Vapor Tight Light	☐ Linear	38	Mfr. Spec	3	New	☐	114	NA: < 6200 lumens	☐	☐
F9	21w LED Down Light	☐ Linear	21	Mfr. Spec	4	New	☐	84	NA: < 6200 lumens	☐	☐
							Total Design Watts:	876.7			

** NOTES: Selections with a * require a note in the space below explaining how compliance is achieved.*
EX: Luminaire is lighting a statue; EXCEPTION 2 to §130.2(b)

[1] FOOTNOTES: Authority Having Jurisdiction may ask for Luminaire cut sheets to confirm wattage used for compliance per §130.0(c)
[2] For linear luminaires, wattage should be indicated as W/lf instead of Watts/luminaire. Total linear feet should be indicated in column 05 instead of number of luminaires.
[3] Select "New" for new luminaires in a new outdoor lighting project, or for added luminaires in an alteration. Select "Altered" for replacement luminaires in an alteration. Select "Existing to Remain" for existing luminaires within the project scope that are not being altered and are remaining. Select "Existing Reinstalled" for existing luminaires which are being removed and reinstalled as part of the project scope.

Registration Number: Registration Date/Time: Registration Provider: Energysoft

CA Building Energy Efficiency Standards - 2019 Nonresidential Compliance Report Version: 2019.1.003 Schema Version: rev 20200601 Report Generated: 2022-06-13 17:27:11

NOT FOR BID

STK ARCHITECTURE, INC.
42095 ZEVO DR., TEMECULA, CALIFORNIA 92590-3780
Phone: 951.296.9110 Fax: 951.296.6079 Email: stk@stkinc.com

CONSULTANT:

SALASO'BRIEN | expect a difference |
3220 EXECUTIVE RIDGE
SUITE 210
VISTA, CA 92081
TEL: (760) 560-0100
#21189
ED ES SS NP
www.salasobrien.com
E-Mail admin@tsqeng.com

PROJECT ADMINISTERED BY:

SAN BERNARDINO COUNTY
PROJECT & FACILITIES
MANAGEMENT DEPARTMENT

385 N. ARROWHEAD AVE.
SAN BERNARDINO, CA 92415

PROJECT NAME:

SAN BERNARDINO COUNTY FIRE DEPARTMENT:
FIRE STATION 226

PROJECT # 10.10.1032
CIP #21-037
CAFM # SAB198
APN # 0273-011-22

1920 DEL ROSA AVE N.
SAN BERNARDINO,
CA 92404

ISSUE INFORMATION:

DATE:	INFORMATION:
04-11-2022	20% CD SET
04-28-2022	50% CD SET
06-15-2022	95% CD SET
09-16-2022	95% CD- 3rd BAY
10-03-2022	PLAN CHECK

SHEET INFORMATION:

STK PROJECT NO.: 374-154-21
SCALE: AS NOTED
DATE: JANUARY 2021
PLOT DATE: –
DRAWING NAME:

SEAL:

REGISTERED PROFESSIONAL ENGINEER
EDUARDO A. DAVID
No. E18809
Exp. 6/30/23
ELECTRICAL
STATE OF CALIFORNIA

SHEET TITLE:

EXTERIOR
TITLE 24

SHEET NO.:

E0.3

STATE OF CALIFORNIA
Indoor Lighting
NRCC-LTI-E — CALIFORNIA ENERGY COMMISSION

CERTIFICATE OF COMPLIANCE			**NRCC-LTI-E**
Project Name:	San Bernardino County Fire Department: Fire Station 226	**Report Page:**	**(Page 7 of 8)**
Project Address:	1920 Del Rosa Ave N	**Date Prepared:**	6/13/2022

U. DECLARATION OF REQUIRED CERTIFICATES OF ACCEPTANCE

Selections have been made based on information provided in this document. If any selection have been changed by the permit applicant, an explanation should be included in Table E. Additional Remarks. These documents must be provided to the building inspector during construction and any with "-A" in the form name must be completed through an Acceptance Test Technician Certification Provider (ATTCP). For more information visit: http://www.energy.ca.gov/title24/attcp/providers.html

Yes	No	Form/Title	Field Inspector Pass	Field Inspector Fail
●	○	NRCA-LTI-02-A - Must be submitted for occupancy sensors and automatic time switch controls.	☐	☐
○	●	NRCA-LTI-03-A - Must be submitted for automatic daylight controls.	☐	☐
●	○	NRCA-LTI-04-A - Must be submitted for demand responsive lighting controls.	☐	☐
○	●	NRCA-LTI-05-A. - Must be submitted for institutional tuning power adjustment factor (PAF)	☐	☐

STATE OF CALIFORNIA
Indoor Lighting
NRCC-LTI-E — CALIFORNIA ENERGY COMMISSION

CERTIFICATE OF COMPLIANCE			**NRCC-LTI-E**
Project Name:	San Bernardino County Fire Department: Fire Station 226	**Report Page:**	**(Page 4 of 8)**
Project Address:	1920 Del Rosa Ave N	**Date Prepared:**	6/13/2022

F. INDOOR LIGHTING FIXTURE SCHEDULE

[2]Authority Having Jurisdiction may ask for Luminaire cut sheets to confirm wattage used for compliance per §130.0(c) Wattage used must be the maximum rated for the luminaire, not the lamp.

G. MODULAR LIGHTING SYSTEMS

This section does not apply to this project.

H. INDOOR LIGHTING CONTROLS (Not including PAFs)

*This table includes lighting controls for conditioned and unconditioned spaces. When a control having a * is shown, the notes section of this table provides more detail on how compliance is achieved. The lighting controls section of the Compliance Summary Table on the first page will show "DOES NOT COMPLY" if the notes are left blank.*

Building Level Controls

01	02	03 Field Inspector Pass	03 Field Inspector Fail
Mandatory Demand Response §110.12(c)	Shut-off controls §130.1(c)		
Required > 10,000 SF	Whole Building Auto Time Switch	☐	☐

Area Level Controls

04	05	06	07	08	09	10	11	12 Field Inspector Pass	12 Field Inspector Fail
Area Description	Complete Building or Area Category Primary Function Area	Area Controls §130.1(a)	Multi-Level Controls §130.1(b)	Shut-Off Controls §130.1(c)	Primary/Skylit Daylighting §130.1(d)	Secondary Daylighting §140.6(d)	Interlocked Systems §140.6(a)1		

*NOTES: Controls with a * require a note in the space below explaining how compliance is achieved.
EX: Conference 1: Primary/Skylight Daylighting: Exempt because less than 120 watts of general lighting; EXCEPTION 1 to §130.1(d)2

13

Plan Sheet Showing Daylit Zones:

I. LIGHTING POWER ALLOWANCE: COMPLETE BUILDING OR AREA CATEGORY METHODS

Each area complying using the Complete Building or Area Category Methods per §140.6(b) are included in this table. Column 06 indicates if additional lighting power allowances per §140.6(c) or adjustments per §140.6(a) are being used .

Conditioned Spaces

STATE OF CALIFORNIA
Indoor Lighting
NRCC-LTI-E — CALIFORNIA ENERGY COMMISSION

CERTIFICATE OF COMPLIANCE			**NRCC-LTI-E**
Project Name:	San Bernardino County Fire Department: Fire Station 226	**Report Page:**	**(Page 1 of 8)**
Project Address:	1920 Del Rosa Ave N	**Date Prepared:**	6/13/2022

This document is used to demonstrate compliance with requirements in §110.9, §110.12(c), §130.0, §130.1, §140.6 and §141.0(b)2 for indoor lighting scopes using the prescriptive path.

A. GENERAL INFORMATION

01 Project Location (city)	San Bernardino	04 Total Conditioned Floor Area (ft^2)	7,299
02 Climate Zone	10	05 Total Unconditioned Floor Area (ft^2)	490
03 Occupancy Types Within Project (select all that apply):		06 # of Stories (Habitable Above Grade)	1

☐ Office ☐ Retail ☐ Warehouse ☐ Hotel/Motel ☐ School ☐ Support Areas
☐ Parking Garage ☐ High-Rise Residential ☐ Relocatable ☐ Healthcare ☒ Other (Write In) Assembly

B. PROJECT SCOPE

This table includes any lighting systems that are within the scope of the permit application and are demonstrating compliance using the prescriptive path outlined in §140.6 or §141.0(b)2 for alterations.

Scope of Work	Conditioned Spaces		Unconditioned Spaces	
01	02	03	04	05
My Project Consists of (check all that apply):	Calculation Method	Area (ft^2)	Calculation Method	Area (ft^2)
☒ New Lighting System	Complete Building Method	7299	Complete Building Method	490
☐ New Lighting System - Parking Garage				
Total Area of Work (ft^2)	7299		490	

STATE OF CALIFORNIA
Indoor Lighting
NRCC-LTI-E — CALIFORNIA ENERGY COMMISSION

CERTIFICATE OF COMPLIANCE			**NRCC-LTI-E**
Project Name:	San Bernardino County Fire Department: Fire Station 226	**Report Page:**	**(Page 8 of 8)**
Project Address:	1920 Del Rosa Ave N	**Date Prepared:**	6/13/2022

DOCUMENTATION AUTHOR'S DECLARATION STATEMENT

I certify that this Certificate of Compliance documentation is accurate and complete.

Documentation Author Name:	Documentation Author Signature: Eduardo G Pineda
Company:	Signature Date:
Address:	CEA/ HERS Certification Identification (if applicable):
City/State/Zip:	Phone:

RESPONSIBLE PERSON'S DECLARATION STATEMENT

I certify the following under penalty of perjury, under the laws of the State of California:

1. The information provided on this Certificate of Compliance is true and correct.
2. I am eligible under Division 3 of the Business and Professions Code to accept responsibility for the building design or system design identified on this Certificate of Compliance (responsible designer)
3. The energy features and performance specifications, materials, components, and manufactured devices for the building design or system design identified on this Certificate of Compliance conform to the requirements of Title 24, Part 1 and Part 6 of the California Code of Regulations.
4. The building design features or system design features identified on this Certificate of Compliance are consistent with the information provided on other applicable compliance documents, worksheets, calculations, plans and specifications submitted to the enforcement agency for approval with this building permit application.
5. I will ensure that a completed signed copy of this Certificate of Compliance shall be made available with the building permit(s) issued for the building, and made available to the enforcement agency for all applicable inspections. I understand that a completed signed copy of this Certificate of Compliance is required to be included with the documentation the builder provides to the building owner at occupancy.

Responsible Designer Name: Ed David	Responsible Designer Signature: Eduardo G Pineda
Company: T-Squared Professional Engineers, Inc.	Date Signed: 2022-06-13
Address: 1340 Specialty Dr., Suite E	License: E18809
City/State/Zip: Vista CA 92081	Phone: (760) 560-0100

STATE OF CALIFORNIA
Indoor Lighting
NRCC-LTI-E — CALIFORNIA ENERGY COMMISSION

CERTIFICATE OF COMPLIANCE			**NRCC-LTI-E**
Project Name:	San Bernardino County Fire Department: Fire Station 226	**Report Page:**	**(Page 5 of 8)**
Project Address:	1920 Del Rosa Ave N	**Date Prepared:**	6/13/2022

I. LIGHTING POWER ALLOWANCE: COMPLETE BUILDING OR AREA CATEGORY METHODS

01	02	03	04	05	06	
Area Description	Complete Building or Area Category Primary Function Area	Allowed Density (W/ft^2)	Area (ft^2)	Allowed Wattage (Watts)	Additional Allowance / Adjustment: Area Category	Additional Allowance / Adjustment: PAF
Whole Building	Assembly Building	0.7	7,299	5,109.3	No	No
		TOTALS:	7,299	5,109.3	See Tables J, or P for detail	

Unconditioned Spaces

01	02	03	04	05	06	
Area Description	Complete Building or Area Category Primary Function Area	Allowed Density (W/ft^2)	Area (ft^2)	Allowed Wattage (Watts)	Additional Allowance / Adjustment: Area Category	Additional Allowance / Adjustment: PAF
Whole Building	Assembly Building	0.7	490	343	No	No
		TOTALS:	490	343	See Tables J, or P for detail	

J. ADDITIONAL ALLOWANCE: AREA CATEGORY METHOD QUALIFYING LIGHTING SYSTEM

This section does not apply to this project.

K. TAILORED METHOD GENERAL LIGHTING POWER ALLOWANCE

This section does not apply to this project.

L. ADDITIONAL LIGHTING ALLOWANCE: TAILORED WALL DISPLAY

This section does not apply to this project.

M. ADDITIONAL LIGHTING ALLOWANCE: TAILORED FLOOR AND TASK LIGHTING

This section does not apply to this project.

N. ADDITIONAL LIGHTING ALLOWANCE: TAILORED ORNAMENTAL/SPECIAL EFFECTS

This section does not apply to this project.

STATE OF CALIFORNIA
Indoor Lighting
NRCC-LTI-E — CALIFORNIA ENERGY COMMISSION

CERTIFICATE OF COMPLIANCE			**NRCC-LTI-E**
Project Name:	San Bernardino County Fire Department: Fire Station 226	**Report Page:**	**(Page 2 of 8)**
Project Address:	1920 Del Rosa Ave N	**Date Prepared:**	6/13/2022

C. COMPLIANCE RESULTS

If any cell on this table says "DOES NOT COMPLY" or "COMPLIES with Exceptional Conditions" refer to Table D. for guidance.

Lighting in conditioned and unconditioned spaces must not be combined for compliance per §140.6(b)1	Allowed Lighting Power per §140.6(b) (Watts): 01 Complete Building §140.6(c)1 (See Table I)	02 Area Category §140.6(c)2 (See Table I)	03 Area Category Additional §140.6(c)2G (+) (See Table J)	04 Tailored §140.6(c)3 (+) (See Table K)	=	05 **Total Allowed** (Watts)	≥	Adjusted Lighting Power per §140.6(a) (Watts): 06 Total Designed (Watts) (See Table F)	07 Adjustments: PAF Lighting Control Credits §140.6(a)2 (-) (See Table P)	=	08 **Total Adjusted** (Watts) *Includes Adjustments	Compliance Results 09 **05 must be >= 08 §140.6**
Conditioned	5,109				=	5,109	≥	4,140.9	0	=	4140.9	COMPLIES
Unconditioned	343				=	343	≥	185	0	=	185	COMPLIES
Controls Compliance (See Table H for Details)												COMPLIES
Rated Power Reduction Compliance (See Table Q for Details)												

D. EXCEPTIONAL CONDITIONS

This table is auto-filled with uneditable comments because of selections made or data entered in tables throughout the form.

E. ADDITIONAL REMARKS

This table includes remarks made by the permit applicant to the Authority Having Jurisdiction.

F. INDOOR LIGHTING FIXTURE SCHEDULE

This table includes all permanent designed lighting and all portable lighting in offices.

Designed Wattage: Conditioned Spaces

01	02	03	04	05	06	07	08	09	10 Field Inspector Pass	10 Field Inspector Fail
Name or Item Tag	Complete Luminaire Description	Modular (Track) Fixture	Small Aperture & Color Change[1]	Watts per luminaire[2]	How is Wattage determined	Total Number of Luminaires	Excluded per §140.6(a)3	Design Watts		
F15	21w 6" Daimeter LED Shower Light	No	No	21	Mfr. Spec		No	0	☐	☐

STATE OF CALIFORNIA
Indoor Lighting
NRCC-LTI-E — CALIFORNIA ENERGY COMMISSION

CERTIFICATE OF COMPLIANCE			**NRCC-LTI-E**
Project Name:	San Bernardino County Fire Department: Fire Station 226	**Report Page:**	**(Page 6 of 8)**
Project Address:	1920 Del Rosa Ave N	**Date Prepared:**	6/13/2022

O. ADDITIONAL LIGHTING ALLOWANCE: TAILORED VERY VALUABLE MERCHANDISE

This section does not apply to this project.

P. POWER ADJUSTMENT: LIGHTING CONTROL CREDIT (POWER ADJUSTMENT FACTOR (PAF))

This section does not apply to this project.

Q. RATED POWER REDUCTION COMPLIANCE FOR ALTERATIONS

This section does not apply to this project.

R. 80% LIGHTING POWER FOR ALL ALTERATIONS - CONTROLS EXCEPTIONS

This section does not apply to this project.

S. DAYLIGHT DESIGN POWER ADJUSTMENT FACTOR (PAF)

This section does not apply to this project.

T. DECLARATION OF REQUIRED CERTIFICATES OF INSTALLATION

Selections have been made based on information provided in this document. If any selection have been changed by permit applicant, an explanation should be included in Table E. Additional Remarks. These documents must be provided to the building inspector during construction and can be found online at https://www.energy.ca.gov/title24/2019standards/2019_compliance_documents/Nonresidential_Documents/NRCI/

Yes	No	Form/Title	Field Inspector Pass	Field Inspector Fail
●	○	NRCI-LTI-01-E - Must be submitted for all buildings	☐	☐
○	●	NRCI-LTI-02-E- Must be submitted for a lighting control system, or for an Energy Management Control System (EMCS), to be recognized for compliance.	☐	☐
○	●	NRCI-LTI-04-E - Must be submitted for two interlocked systems serving an auditorium, a convention center, a conference room, a multipurpose room or a theater to be recognized for compliance.	☐	☐
○	●	NRCI-LTI-05-E- Must be submitted for a Power Adjustment Factor (PAF) to be recognized for compliance.	☐	☐
○	●	NRCI-LTI-06-E- Must be submitted for additional wattage installed in a video conferencing studio to be recognized for compliance.	☐	☐

STATE OF CALIFORNIA
Indoor Lighting
NRCC-LTI-E — CALIFORNIA ENERGY COMMISSION

CERTIFICATE OF COMPLIANCE			**NRCC-LTI-E**
Project Name:	San Bernardino County Fire Department: Fire Station 226	**Report Page:**	**(Page 3 of 8)**
Project Address:	1920 Del Rosa Ave N	**Date Prepared:**	6/13/2022

F. INDOOR LIGHTING FIXTURE SCHEDULE

F17	2.5w LED Reading Light	No	No	2.5	Mfr. Spec	8	No	20	☐	☐
F18/F18E	27.9w 2 X 2 LED Troffer	No	No	27.9	Mfr. Spec	22	No	613.8	☐	☐
F19	38w 48" LED Vapor Tight Light	No	No	38	Mfr. Spec	5	No	190	☐	☐
F2	48" LED Strip Light	No	No	42	Mfr. Spec	8	No	336	☐	☐
F20/F20E	130w 96" LED Vapor Tight Light	No	No	130	Mfr. Spec	15	No	1,950	☐	☐
F21	50w Metal Halide	No	No	58	CEC Default		No	0	☐	☐
F24/F24E	27.9w 2 X 4 LED Troffer	No	No	27.9	Mfr. Spec	9	No	251.1	☐	☐
F5	20" 10w LED Linear Under Cabinet	No	No	10	Mfr. Spec	10	No	100	☐	☐
F6	17w 6" Daimeter LED Down Light	No	No	17	Mfr. Spec	22	No	374	☐	☐
F6/F6E	17w 6" Daimeter LED Down Light	No	No	17	Mfr. Spec	10	No	170	☐	☐
F7	17w 6" Daimeter LED Down Light	No	No	17	Mfr. Spec	8	No	136	☐	☐
							Total Designed Watts: CONDITIONED SPACES	4,140.9		

Designed Wattage: Unconditioned Spaces

01	02	03	04	05	06	07	08	09	10 Field Inspector Pass	10 Field Inspector Fail
Name or Item Tag	Complete Luminaire Description	Modular (Track) Fixture	Small Aperture & Color Change[1]	Watts per luminaire[2]	How is Wattage determined	Total Number of Luminaires	Excluded per §140.6(a)3	Design Watts		
F2	48" LED Strip Light	No	No	42	Mfr. Spec	4	No	168	☐	☐
F6	17w 6" Daimeter LED Down Light	No	No	17	Mfr. Spec	1	No	17	☐	☐
							Total Designed Watts: UNCONDITIONED SPACES	185		

[1]FOOTNOTE: Design Watts for small aperture and color changing luminaires which qualify per §140.6(a)4B is adjusted to be 75% of their rated wattage. Table F automatically makes this adjustment, the permit applicant should enter full rated wattage in column 05.

NOT FOR BID

STK
42095 ZEVO DR., TEMECULA, CALIFORNIA 92590-3780
Phone: 951.296.9110 Fax: 951.296.6079 Email: stk@stknc.com

CONSULTANT:

SALASO'BRIEN
[expect a difference]
3220 EXECUTIVE RIDGE
SUITE 210
VISTA, CA 92081
TEL: (760) 560-0100
#21189
ED | ES | SS | NP
www.salasobrien.com
E-Mail admin@tsqeng.com

PROJECT ADMINISTERED BY:
SAN BERNARDINO COUNTY
PROJECT & FACILITIES
MANAGEMENT DEPARTMENT

385 N. ARROWHEAD AVE.
SAN BERNARDINO, CA 92415

PROJECT NAME:
SAN BERNARDINO
COUNTY FIRE
DEPARTMENT:
FIRE STATION 226

PROJECT # 10.0.0.032
CIP #21-037
CAFM # SAB198
APN # 0273-011-22

1920 DEL ROSA AVE N.
SAN BERNARDINO,
CA 92404

ISSUE INFORMATION:

DATE:	INFORMATION:
04-11-2022	20% CD SET
04-28-2022	50% CD SET
06-15-2022	95% CD SET
09-16-2022	95% CD- 3rd BAY
10-03-2022	PLAN CHECK

SHEET INFORMATION:
STK PROJECT NO.: 374-154-21
SCALE: AS NOTED
DATE: JANUARY 2021
PLOT DATE: –
DRAWING NAME:

SEAL:

REGISTERED PROFESSIONAL ENGINEER
EDWARD A. DAVID
No. E18809
Exp. 6/30/23
ELECTRICAL
STATE OF CALIFORNIA

SHEET TITLE:
INTERIOR
TITLE 24

SHEET NO.:
E0.4

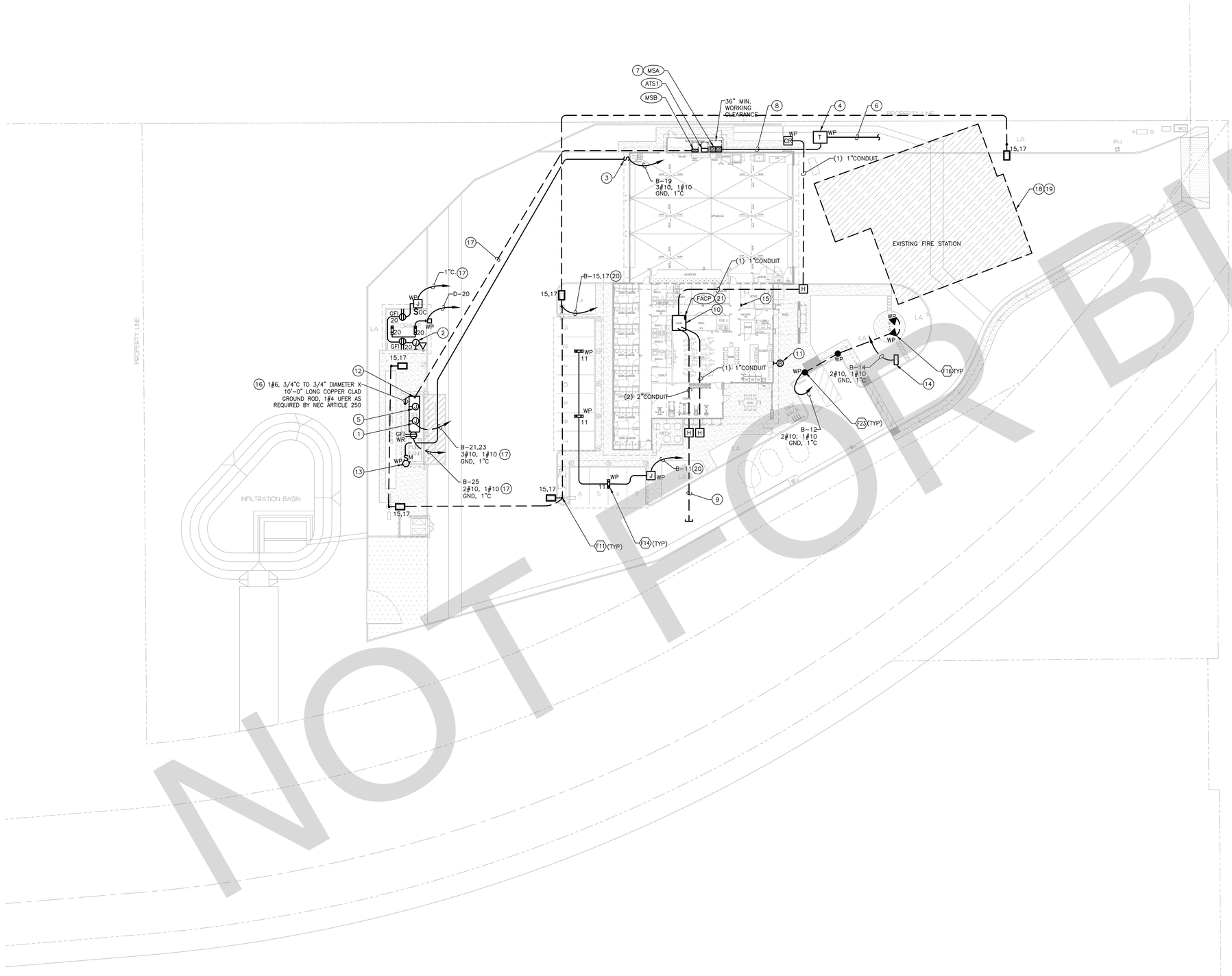

ELECTRICAL SITE PLAN 1
1" = 20'-0"

GENERAL NOTES

A. CONDUITS TO BE MINIMUM 24" BELOW GRADE.

B. UTILITY SERVICES TO BE MINIMUM 36" BELOW GRADE TO TOP OF CONDUITS. COORDINATE WITH MECHANICAL, CIVIL, LANDSCAPE AND IRRIGATION SITE DRAWINGS, PRIOR TO START OF WORK.

C. PROVIDE PULL WIRES IN ALL EMPTY CONDUITS AS REQUIRED BY UTILITIES SERVICE.

D. UTILITY PAD TO BE FURNISHED PER SERVING UTILITY COMPANY STANDARDS. PROVIDE EASILY IDENTIFIABLE MARKERS AT ALL CONDUIT STUBS.

E. CONSTRUCTION AND INSPECTION WILL BE PER UTILITY-ISSUED DRAWINGS AND SPECIFICATIONS.

F. REFER TO ARCHITECTURAL UTILITY SITE PLAN A1.1 FOR ELECTRICAL, TELEPHONE AND CATV CONDUIT REQUIREMENTS AND INSTALLATION POINTS TO BE INCLUDED IN BID.

G. ALL OUTLETS (INCLUDING OUTSIDE) NEAR POSSIBLE WATER SOURCE SHALL BE GFI TYPE.

H. UNLESS SWITCH IS SHOWN, ALL EXTERIOR LIGHTS SHALL BE CONTROLLED BY LIGHTING CONTROL PANEL.

I. PROVIDE ALL UNDERGROUND CONDUIT REQUIRED AS PART OF THE BASE BID.

J. ALL EQUIPMENT LOCATED OUTSIDE SHALL BE RATED AS SUCH.

K. CONTRACTOR SHALL FIELD VERIFY EXISTING CONDITIONS AND COORDINATE WITH ALL OTHER TRADES. IN CASE OF DISCREPANCIES OR POTENTIAL CONFLICTS, INFORM ARCHITECT AND ENGINEER IN WRITING PRIOR TO START OF WORK.

L. EXTERIOR LIGHT POLLUTION SHALL COMPLY WITH CGC SECTION 5.106.8.

KEY NOTES

1. CONNECT TO GENERATOR JACKET WATER HEATER. COORDINATE WIRING REQUIREMENTS AND LOCATION WITH GENERATOR PROVIDER/INSTALLER PRIOR TO START OF WORK.
2. JUNCTION BOX FOR IRRIGATION CONTROLLER. COORDINATE LOCATION WITH LANDSCAPE CONTRACTOR PRIOR TO START OF WORK.
3. PROVIDE 2-POLE PUSHBUTTON WITH RED MUSHROOM HEAD SWITCHES IN "FS" BOX AND WEATHER PROOF COVER FLUSH IN WALL AT +54" TO CENTER LINE. SWITCHES TO DISCONNECT BOTH HOT AND NEUTRAL CONDUCTORS. PROVIDE RED 6' X 12" MICARTA SIGN WITH 1-1/2" H X 1/4" STROKE LETTERS ENGRAVED: "EMERGENCY FUEL PUMP "A" SHUT OFF" AND "EMERGENCY FUEL PUMP "B" SHUT OFF". PROVIDE 3" H X 1/2" STROKE LETTERS (RED LETTERS ON WHITE BACKGROUND). "NO SMOKING" SIGN ON EACH SIDE OF ABOVE GROUND FUEL TANKS. PROVIDE EYS FITTING IN CONDUIT GOING TO PUSHBUTTON AND 12" X 18" PULL BOX.
4. PROPOSED LOCATION OF UTILITY TRANSFORMER. VERIFY EXACT LOCATION WITH UTILITY COMPANY PRIOR TO START OF WORK.
5. CONNECT TO GENERATOR BATTERY CHARGER. COORDINATE WIRING REQUIREMENTS AND LOCATION WITH GENERATOR PROVIDER/INSTALLER PRIOR TO START OF WORK.
6. UTILITY COMPANY PRIMARY FEEDER. COORDINATE REQUIREMENTS WITH UTILITY PLANNER.
7. PROVIDE 600 AMP, 208Y/120 VOLT, 3 PHASE, 4 WIRE, METER MAIN SWITCHBOARD "MS". SEE SINGLE LINE DIAGRAM ON SHEET E4.1 FOR MORE INFORMATION.
8. PROVIDE TWO (2) 4" CONDUIT TO UTILITY TRANSFORMER. COORDINATE WITH UTILITY COMPANY FOR EXACT LOCATION AND REQUIREMENTS, PRIOR TO START OF WORK.
9. PROVIDE TWO (2) 2" SCHEDULE 40 PVC CONDUIT, ONE FOR CATV AND ONE FOR TELEPHONE WITH 3/8" PULL ROPE. COORDINATE WITH CATV AND TELCO UTILITY FOR EXACT LOCATION AND REQUIREMENTS PRIOR TO START OF WORK. CONDUITS SHALL BE BURIED A MINIMUM OF 36" BELOW FINISHED GRADE.
10. PROVIDE 3/4" X 8'-0" HIGH X 6'-0" WIDE FIRE RATED PLYWOOD BACKBOARD WITH 1#6 COPPER GROUNDING CONDUCTOR BOND TO MAIN SWITCHBOARD GROUND ELECTRODE SYSTEM.
11. PROVIDE 2#12, 1#12 GROUND IN 3/4" CONDUIT TO FLOW SWITCH, PIV AND CONNECT TO SPRINKLER BELLS. COORDINATE WITH SPRINKLER SYSTEM FOR EXACT LOCATION AND REQUIREMENTS.
12. GENERATOR PROVIDED BY CONTRACTOR. SEE SINGLE LINE DIAGRAM FOR MORE INFORMATION.
13. PROVIDE CONNECTION TO 1/4 HP 120 VOLT PUMP/TANK PACKAGE UNIT. COORDINATE WITH MANUFACTURER FOR EXACT REQUIREMENTS PRIOR TO START OF WORK.
14. IRRIGATION CONTROLLER, COORDINATE EXACT LOCATION AND REQUIREMENTS WITH SUPPLIER/INSTALLER PRIOR TO START OF WORK.
15. PROVIDE GENERATOR REMOTE ANNUNCIATOR PANEL IN LOBBY ABOVE COUNTER WITH 1" CONDUIT TO GENERATOR CONTROLS LOCATION, COORDINATE ALL REQUIREMENTS WITH GENERATOR SUPPLIER/INSTALLER PRIOR TO START OF WORK.
16. PROVIDE GROUNDING ELECTRODE SYSTEM TO METALLIC BUILDING STRUCTURE AS REQUIRED BY NEC ARTICLE 250.
17. PROVIDE 1#10 BOND TO METALLIC BUILDING GROUNDING ELECTRODE SYSTEM AS REQUIRED BY NEC ARTICLE 250.
18. THE EXISTING FIRE STATION BUILDING SHALL REMAIN FULLY FUNCTIONAL AND OCCUPIED DURING THE DURATION OF THE CONSTRUCTION OF THE NEW FIRE STATION. THE GENERAL CONTRACTOR SHALL PROVIDE ANY TEMPORARY UTILITIES THAT MAY BE REQUIRED FOR EITHER OR BOTH BUILDINGS TO REMAIN OPERATIONAL. THIS SHALL BE INCLUDED IN THE CONTRACTORS BID AND SHALL NOT INCUR ADDITIONAL COST TO THE OWNER. EXISTING FIRE STATION TO BE REMAIN AND IN OPERATIONAL. ALL UTILITIES CONNECTED TO EXISTING SHALL PROTECT IN PLACE DURING CONSTRUCTION OF THE PROJECT DURING PHASE 1.
19. DISCONNECT AND REMOVE ALL EXISTING UTILITIES (POWER, PHONE, DATA, ETC. BACK TO ITS ORIGINAL SOURCE ONCE THE NEW FIRE STATION IS COMPLETED DURING PHASE 2 OF THE CONSTRUCTION. ALL DEMOLITION OF THE EXISTING BUILDING DURING PHASE 2 OF THE PROJECT SHALL BE IN THE CONTRACTOR'S BID PROPOSAL FOR BOTH PHASES AND SHALL NOT INCUR ADDITIONAL COST TO THE OWNER.
20. ROUTE LIGHTING CIRCUIT THRU LIGHTING CONTROL PANEL "LCP".
21. COORDINATE EXACT LOCATION WITH FIRE ALARM CONTRACTOR.

STK
42065 ZEVO DR., TEMECULA, CALIFORNIA 92590-3780
Phone: 951.296.9110 Fax: 951.296.6079 Email: stk@stkinc.com

CONSULTANT:
SALAS O'BRIEN
[expect a difference]
3220 EXECUTIVE RIDGE
SUITE 210
VISTA, CA 92081
TEL: (760) 560-0100
#21189
ED | ES | SS | NP
www.salasobrien.com
E-Mail admin@tsqeng.com

PROJECT ADMINISTERED BY:
SAN BERNARDINO COUNTY
PROJECT & FACILITIES
MANAGEMENT DEPARTMENT

385 N. ARROWHEAD AVE.
SAN BERNARDINO, CA 92415

PROJECT NAME:
SAN BERNARDINO COUNTY FIRE DEPARTMENT:
FIRE STATION 226

PROJECT # 10.10.10.32
CIP #21-037
CAFM # SAB198
APN # 0273-011-22

1920 DEL ROSA AVE N.
SAN BERNARDINO,
CA 92404

ISSUE INFORMATION:

DATE:	INFORMATION:
04-11-2022	20% CD SET
04-28-2022	50% CD SET
06-15-2022	95% CD SET
09-16-2022	95% CD- 3rd BAY
10-03-2022	PLAN CHECK

SHEET INFORMATION:
STK PROJECT NO.: 374-154-21
SCALE: AS NOTED
DATE: JANUARY 2021
PLOT DATE: –
DRAWING NAME:

SEAL:
REGISTERED PROFESSIONAL ENGINEER
EDWARD A. DUNCAN
Exp. 6/30/23
ELECTRICAL
STATE OF CALIFORNIA

SHEET TITLE:
ELECTRICAL SITE PLAN

SHEET NO.:
E1.1

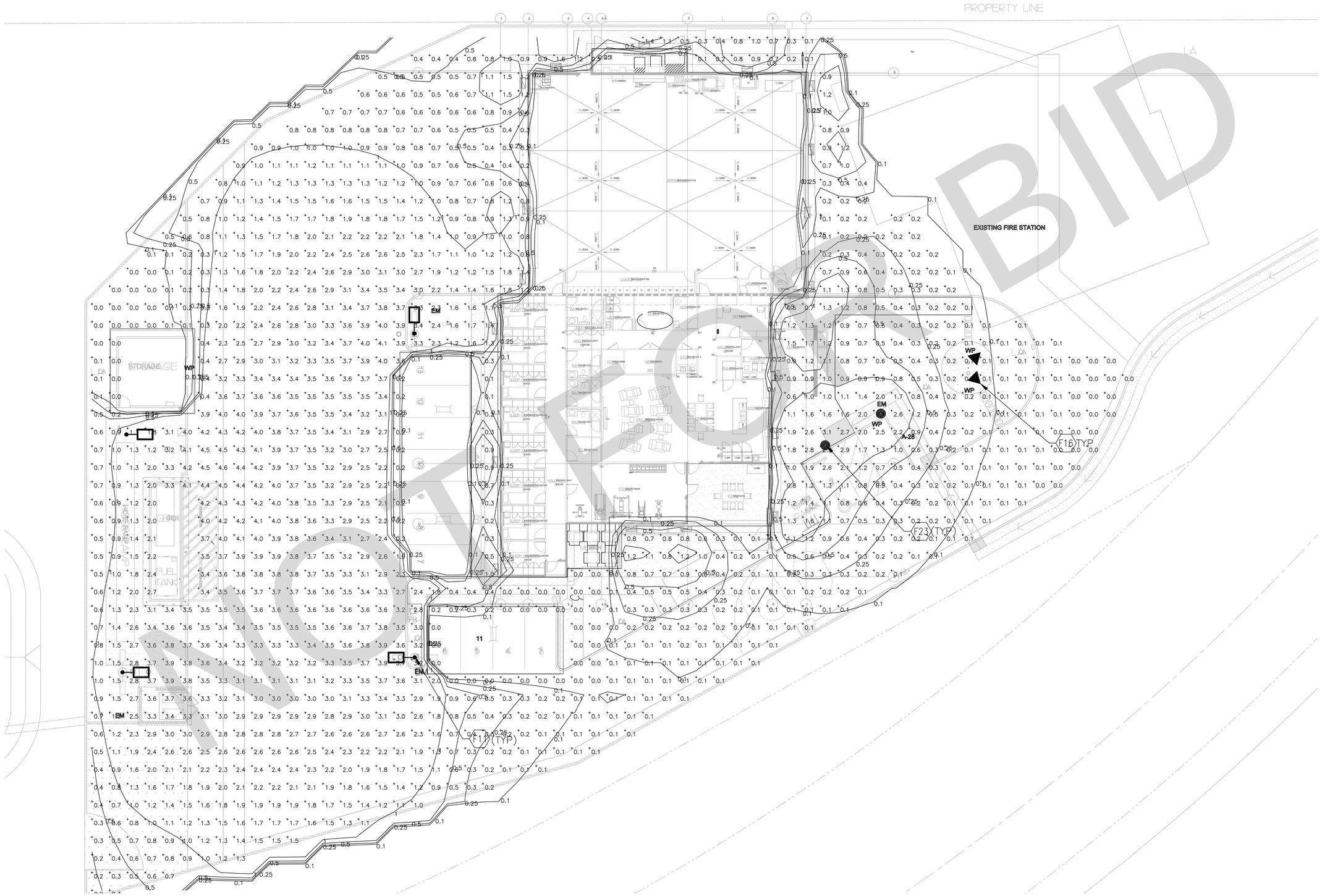

ELECTRICAL SITE PLAN - PHOTOMETRIC 1

3/32" = 1'-0"

Statistics						
Description	Symbol	Avg	Max	Min	Max/Min	Avg/Min
Calc Zone #1	+	1.5 fc	4.6 fc	0.0 fc	N/A	N/A

STK
42095 ZEVO DR., TEMECULA, CALIFORNIA 92590-3780
Phone: 951.296.9110 Fax: 951.296.6079 Email: stk@stkinc.com

CONSULTANT:

SALASO'BRIEN
[expect a difference]
3220 EXECUTIVE RIDGE
SUITE 210
VISTA, CA 92081
TEL: (760) 560-0100
#21189
ED | ES | SS | NP
www.salasobrien.com
E-Mail admin@tsqeng.com

PROJECT ADMINISTERED BY:
SAN BERNARDINO COUNTY
PROJECT & FACILITIES
MANAGEMENT DEPARTMENT

385 N. ARROWHEAD AVE.
SAN BERNARDINO, CA 92415

PROJECT NAME:

SAN BERNARDINO
COUNTY FIRE
DEPARTMENT:

FIRE STATION 226

PROJECT # 10.10.1032

CIP #21-037

CAFM # SAB198

APN # 0273-011-22

1920 DEL ROSA AVE N.
SAN BERNARDINO,
CA 92404

ISSUE INFORMATION:

DATE:	INFORMATION:
04-11-2022	20% CD SET
04-28-2022	50% CD SET
06-15-2022	95% CD SET
09-16-2022	95% CD- 3rd BAY
10-03-2022	PLAN CHECK

SHEET INFORMATION:

STK PROJECT NO.: 374-154-21
SCALE: AS NOTED
DATE: JANUARY 2021
PLOT DATE: –
DRAWING NAME:

SEAL:

REGISTERED PROFESSIONAL ENGINEER
EDWARD A. SIPIN
Lic. E18809
Exp. 6/30/23
ELECTRICAL
STATE OF CALIFORNIA

SHEET TITLE:

ELECTRICAL
SITE PLAN
PHOTOMETRIC

SHEET NO.:

E1.1ph

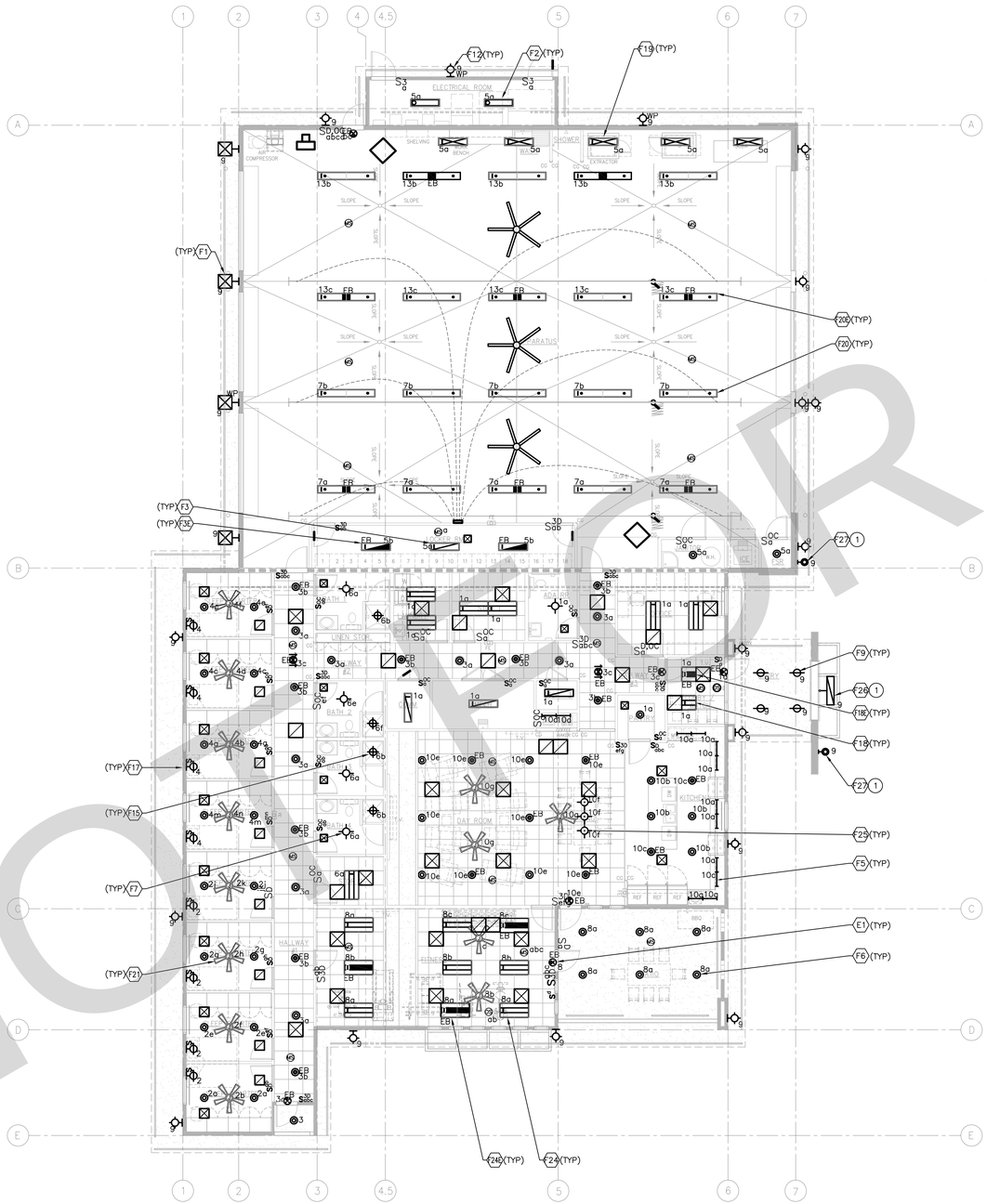

GENERAL NOTES

A. CONTRACTOR SHALL FIELD VERIFY EXISTING CONDITIONS AND COORDINATE WITH ALL OTHER TRADES. IN CASE OF DISCREPANCIES OR ANY POTENTIAL CONFLICTS, INFORM THE ARCHITECT AND ENGINEER IN WRITING PRIOR TO START OF WORK.

B. CONTRACTOR SHALL VERIFY EXACT QUANTITIES, LOCATIONS AND HEIGHTS OF ALL FIXTURES WITH TENANT AND ARCHITECT PRIOR TO START OF WORK.

C. ALL LIGHTING TO BE CONNECTED TO PANEL 'B', CIRCUIT NUMBER(S) AS SHOWN.

D. ALL FIXTURES PROVIDED WITH EGRESS LIGHTING BATTERY PACK BACK-UP SHALL BE FED FROM UNSWITCHED CIRCUIT SERVING LIGHTING IN SAME AREA PER NEC ARTICLE 700.12(F). EMERGENCY BATTERY PACK SHALL BE ACTIVATED ONLY UPON NORMAL POWER FAILURE.

KEY NOTES

1. SIGNAGE LIGHT, MOUNT ABOVE SIGNAGE. COORDINATE WITH ARCHITECT PLANS FOR EXACT LOCATION OF THE SIGNAGE AND MOUNTING HEIGHT. ROUTE EXTERIOR THRU LIGHTING CONTROL PANEL.

LIGHTING FLOOR PLAN (1)
1/8" = 1'-0"

NOT FOR BID

STK ARCHITECTURE, INC
42095 ZEVO DR., TEMECULA, CALIFORNIA 92590-3780
Phone: 951.296.9110 Fax: 951.296.6079 Email: stk@stkinc.com

CONSULTANT:

SALASOBRIEN
[expect a difference]
3220 EXECUTIVE RIDGE
SUITE 210
VISTA, CA 92081
TEL: (760) 560-0100
#21189
09-28-22
www.salasobrien.com
E-Mail admin@tstgeng.com
ED | ES | SS | NP

PROJECT ADMINISTERED BY:
SAN BERNARDINO COUNTY
PROJECT & FACILITIES
MANAGEMENT DEPARTMENT

385 N. ARROWHEAD AVE.
SAN BERNARDINO, CA 92415

PROJECT NAME:

SAN BERNARDINO
COUNTY FIRE
DEPARTMENT:

FIRE STATION 226

PROJECT # 10.10.1032

CIP #21-037

CAFM # SAB198

APN # 0273-011-22

1920 DEL ROSA AVE N.
SAN BERNARDINO,
CA 92404

ISSUE INFORMATION:

DATE:	INFORMATION:
04-11-2022	20% CD SET
04-28-2022	50% CD SET
06-15-2022	95% CD SET
09-16-2022	95% CD- 3rd BAY
10-03-2022	PLAN CHECK

SHEET INFORMATION:

STK PROJECT NO.: 374-154-21
SCALE: AS NOTED
DATE: JANUARY 2021
PLOT DATE: –
DRAWING NAME:

SEAL:

REGISTERED PROFESSIONAL ENGINEER
EDWARD A. SOTO
No. E18809
Exp. 6/30/23
ELECTRICAL
STATE OF CALIFORNIA

SHEET TITLE:

LIGHTING
FLOOR PLAN

SHEET NO.:

E2.1

09/28/2022 7:29AM T:_2021\21189 San Bernardino County FS 226\Elec\21189_E2.1.dwg

GENERAL NOTES

A. CONTRACTOR SHALL FIELD VERIFY EXISTING CONDITIONS AND COORDINATE WITH ALL OTHER TRADES. IN CASE OF DISCREPANCIES OR ANY POTENTIAL CONFLICTS, INFORM THE ARCHITECT AND ENGINEER IN WRITING PRIOR TO START OF WORK.

B. CONTRACTOR SHALL VERIFY EXACT QUANTITIES, LOCATIONS AND HEIGHTS OF ALL FIXTURES WITH TENANT AND ARCHITECT PRIOR TO START OF WORK.

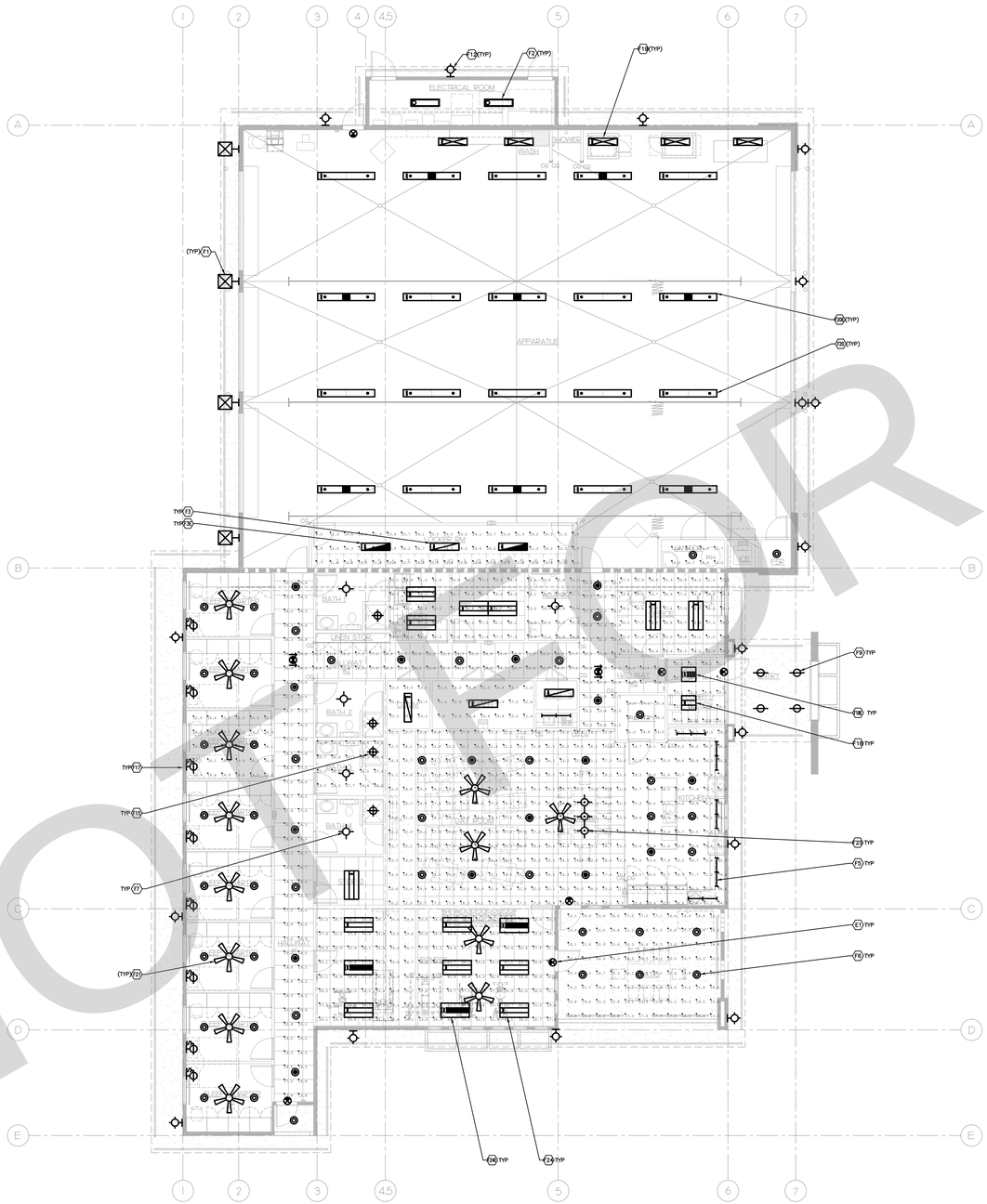

Calculation Summary							
Label	CalcType	Units	Avg	Max	Min	Avg/Min	Max/Min
ADA BATH Floor	Illuminance	Fc	21.07	28.6	13.2	1.60	2.17
BATH TYPICAL Floor	Illuminance	Fc	26.12	34.1	19.5	1.34	1.75
CORR Floor	Illuminance	Fc	24.80	28.4	23.0	1.08	1.23
CORRIDOR Floor	Illuminance	Fc	21.22	32.5	4.8	4.42	6.77
DAY ROOM Workplane	Illuminance	Fc	21.87	29.9	9.5	2.30	3.15
FITNESS Floor	Illuminance	Fc	37.47	49.4	24.1	1.55	2.05
JANITOR Floor	Illuminance	Fc	15.23	16.7	13.7	1.11	1.22
KITCHEN Workplane	Illuminance	Fc	54.58	94.5	14.7	3.71	6.43
LAUNDRY Workplane	Illuminance	Fc	50.72	62.4	39.1	1.30	1.60
LOBBY Floor	Illuminance	Fc	13.42	16.0	10.3	1.30	1.55
LOCKER ROOM Floor	Illuminance	Fc	20.08	28.3	7.7	2.61	3.68
MECH Floor	Illuminance	Fc	18.32	23.4	9.9	1.65	2.36
OFFICE Workplane	Illuminance	Fc	31.48	48.8	17.0	1.85	2.87
PANTRY Workplane	Illuminance	Fc	24.48	32.8	19.0	1.29	1.73
PATIO Floor	Illuminance	Fc	20.59	26.5	13.0	1.58	2.04
SLEEP QUARTER TYPICAL Floor	Illuminance	Fc	16.93	21.4	11.9	1.42	1.80
STOR 1 Workplane	Illuminance	Fc	52.06	72.6	34.5	1.51	2.10

NOT FOR BID

LIGHTING PHOTOMETRIC 1
1/8" = 1'-0"

W N E S

STK
42095 ZEVO DR., TEMECULA, CALIFORNIA 92590-3780
Phone: 951.296.9110 Fax: 951.296.6079 Email: stk@stkinc.com

CONSULTANT:

SALASO'BRIEN
[expect a difference]
3220 EXECUTIVE RIDGE
SUITE 210
VISTA, CA 92081
TEL: (760) 560-0100
#21189
ED | ES | SS | NP
www.salasobrien.com
E-Mail admin@tsqeng.com

PROJECT ADMINISTERED BY:
SAN BERNARDINO COUNTY
PROJECT & FACILITIES
MANAGEMENT DEPARTMENT

385 N. ARROWHEAD AVE.
SAN BERNARDINO, CA 92415

PROJECT NAME:

SAN BERNARDINO
COUNTY FIRE
DEPARTMENT:

FIRE STATION 226

PROJECT # 10.10.10.032

CIP #21-037

CAFM # SAB198

APN # 0273-011-22

1920 DEL ROSA AVE N.
SAN BERNARDINO,
CA 92404

ISSUE INFORMATION:

DATE:	INFORMATION:
04-11-2022	20% CD SET
04-28-2022	50% CD SET
06-15-2022	95% CD SET
09-16-2022	95% CD- 3rd BAY
10-03-2022	PLAN CHECK

SHEET INFORMATION:

STK PROJECT NO.: 374-154-21
SCALE: AS NOTED
DATE: JANUARY 2021
PLOT DATE: –
DRAWING NAME:

SEAL:

REGISTERED PROFESSIONAL ENGINEER
EDWARD A. ORTIZ
No. E18809
Exp. 6/30/23
ELECTRICAL
STATE OF CALIFORNIA

SHEET TITLE:

LIGHTING
PHOTOMETRIC

SHEET NO.:

E2.1PH

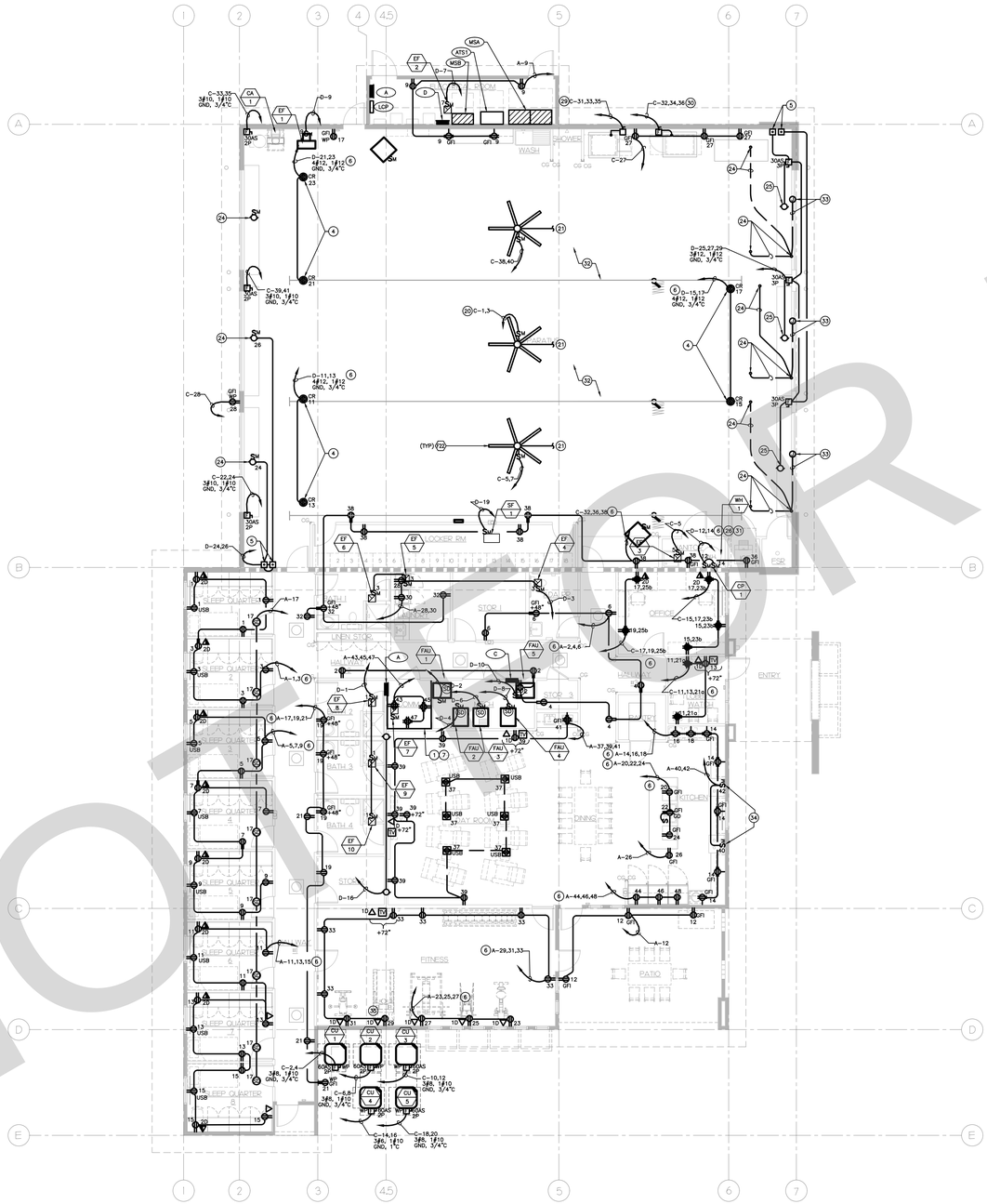

POWER FLOOR PLAN 1

1/8" = 1'-0"

NOT FOR BID

GENERAL NOTES

A. CONTRACTOR SHALL FIELD VERIFY EXISTING CONDITIONS AND COORDINATE WITH ALL OTHER TRADES. IN CASE OF DISCREPANCIES OR ANY POTENTIAL CONFLICTS, INFORM THE ARCHITECT AND ENGINEER IN WRITING PRIOR TO START OF WORK.

B. CONTRACTOR SHALL VERIFY EXACT QUANTITIES, LOCATIONS AND HEIGHTS OF ALL OUTLETS WITH TENANT AND ARCHITECT PRIOR TO START OF WORK.

C. CONTRACTOR SHALL FIELD VERIFY AND COORDINATE WITH MECHANICAL DRAWINGS FOR EXACT LOCATION OF EQUIPMENT AND REQUIREMENTS PRIOR TO START OF WORK.

D. MECHANICAL EQUIPMENT FUSE SIZE RATINGS PER EQUIPMENT MANUFACTURER'S RECOMMENDATIONS.

E. ALL MECHANICAL EQUIPMENT FUSED DISCONNECTS AND MOTOR RATED SWITCHES EXPOSED TO WEATHER SHALL BE WEATHERPROOF RATED.

F. RECEPTACLES AND SWITCHES BACKED UP BY GENERATOR SHALL BE RED IN COLOR AND WITH RED COVER PLATES.

G. ALL RECEPTACLES IN SLEEPING ROOMS AND WHERE REQUIRED BY CODE SHALL BE TAMPERPROOF SPECIFICATION RECEPTACLES FED FROM ARC-FAULT-CIRCUIT-INTERRUPTING (AFCI) TYPE CIRCUIT BREAKERS.

KEY NOTES

1. MAIN TELEPHONE SERVICE BACKBOARD.
2. GENERATOR REMOTE ANNUNCIATOR PANEL. COORDINATE LOCATION OF ANNUNCIATOR PANEL WITH ARCHITECT AND OWNER'S REPRESENTATIVE PRIOR TO START OF WORK.
3. MOUNT SMOKE DETECTORS A MINIMUM OF 36" FROM AIR REGISTERS AND CEILING FANS. INTERFACE ALL SMOKE DETECTORS WITH FIRE ALARM SYSTEM.
4. PROVIDE DUAL CIRCUIT, DUAL RECEPTACLE, 30 AMP CORD REEL. COORDINATE WITH OWNER FOR EXACT RECEPTACLE TYPE PRIOR TO START OF WORK.
5. GARAGE BAY DOOR CONTROL. MOUNT AT 42" ABOVE FINISH FLOOR. COORDINATE WITH ARCHITECTURAL DRAWINGS FOR EXACT LOCATION PRIOR TO START OF WORK.
6. PROVIDE DEDICATED NEUTRAL CONDUCTOR FOR EACH BRANCH CIRCUIT.
7. PROVIDE 3/4" X 8'-0"X 4'-0" FIRE TREATED PLYWOOD WITH 1#6 GROUND CONNECTED TO BUILDING MAIN SERVICE GROUND.
8. GAS SHUTOFF VALVE MOMENTARY RESET PUSH BUTTON WITH PILOT LIGHT BY INTELLIGENT LIGHTING CONTROLS, INC. CATALOG NUMBER – NFP-01-01-LED-PW OR APPROVED EQUAL. PROVIDE WITH 3#12, 1#12 GROUND, 3/4" CONDUIT AND CONNECT TO LIGHTING CONTROL PANEL 'LCP1'. COORDINATE LOCATION OF PUSH BUTTON WITH ARCHITECT AND OWNER'S REPRESENTATIVE PRIOR TO START OF WORK.
9. JUNCTION BOX FOR POWER OR TELE/DATA FEED TO SYSTEM FURNITURE PANELS. PROVIDE FLUSH COVER PLATE AND FLEXIBLE CONDUIT CONNECTION TO FURNITURE PANEL. COORDINATE EXACT LOCATION AND POINT OF CONNECTION WITH SYSTEM FURNITURE SUPPLIER/INSTALLER PRIOR TO START OF WORK.
10. ROUTE CONTROLLED RECEPTACLE THROUGH CEILING MOUNTED OCCUPANCY SENSOR.
11. PROVIDE DOOR BELL SYSTEM AS INDICATED ON PLAN. COORDINATE WITH ARCHITECT FOR EXACT LOCATION PRIOR TO START OF WORK.
12. DUPLEX FLOOR OUTLETS. MANUFACTURER BY CARLON OR EQUAL. FIELD VERIFY EXACT LOCATION AND COORDINATE WITH ARCHITECT AND OWNER'S REPRESENTATIVE PRIOR TO START OF WORK.
13. DISPATCH PANEL. COORDINATE WITH ARCHITECT FOR EXACT LOCATION PRIOR TO START OF WORK.
14. AREA FOR FUTURE PV EQUIPMENT.
15. FIRE ALARM CONTROL PANEL. COORDINATE LOCATION WITH FIRE ALARM CONTRACTOR PRIOR TO START OF WORK.
16. CONNECT TO FLOW SWITCH. COORDINATE LOCATION AND WIRING REQUIREMENTS WITH FLOW SWITCH PROVIDER/INSTALLER PRIOR TO START OF WORK.
17. RECEPTACLE OUTLET FOR KITCHEN HOOD. COORDINATE MOUNTING HEIGHT WITH KITCHEN HOOD PROVIDER/INSTALLER PRIOR TO START OF WORK.
18. SPRINKLER SYSTEM CONTROLLER (WET AND DRY), COORDINATE LOCATION WITH FIRE ALARM CONTRACTOR PRIOR TO START OF WORK.
19. PROVIDE CONNECTION TO ROLL-UP DOOR MOTOR, COORDINATE EXACT LOCATION AND POINT OF CONNECTION WITH DOOR SUPPLIER/INSTALLER PRIOR TO START OF WORK.
20. PROVIDE 2-POLE, MOTOR RATED SWITCH AS A DISCONNECTING MEANS FOR FAN MOTOR, COORDINATE EXACT LOCATION AND POINT OF CONNECTION WITH FAN SUPPLIER/INSTALLER PRIOR TO START OF WORK.
21. PROVIDE 3/4" CONDUIT FOR FAN CONTROL WIRING AND ALL CONTROLS FOR A COMPLETE AND OPERABLE SYSTEM, COORDINATE EXACT LOCATION AND POINTS OF CONNECTION WITH FAN SUPPLIER/INSTALLER PRIOR TO START OF WORK.
22. PROVIDE 30 AMP, 3 POLE DISCONNECT SWITCH WITH 3#12, 1#12 GROUND, 3/4" CONDUIT THROUGH-OUT.
23. THERE SHALL BE NO EXPOSED CONDUIT WITHIN THE APPARATUS BAY.
24. PROVIDE 3/4" CONDUIT UNDER SLAB FOR DOOR OBSTRUCTION DETECTION SYSTEM AND CONTROLS AND STUB-UP AS REQUIRED FOR A COMPLETE AND OPERABLE SYSTEM, COORDINATE EXACT LOCATION AND POINTS OF CONNECTION WITH DOOR SUPPLIER/INSTALLER PRIOR TO START OF WORK.
25. PROVIDE CONNECTION TO AIR COMPRESSOR, PROVIDE WITH MAGNETIC STARTER, START UP KIT. COORDINATE WITH PLUMBING PLANS.
26. PROVIDE 40 AMP, 2 POLE DISCONNECT SWITCH FOR WATER HEATER WH-2.
27. PROVIDE JUNCTION BOX AND POWER FOR CARD READER, COORDINATE EXACT LOCATION, POINT OF CONNECTION AND REQUIREMENTS WITH CARD READER SUPPLIER/INSTALLER PRIOR TO START OF WORK.
28. PROVIDE CONNECTION TO IRRIGATION CONTROLLER, COORDINATE EXACT LOCATION, POINT OF CONNECTION AND REQUIREMENTS WITH IRRIGATION SYSTEM SUPPLIER/INSTALLER PRIOR TO START OF WORK.
29. PROVIDE 60 AMP, 3 POLE DISCONNECT SWITCH WITH 3#8, 1#10 GROUND, 3/4" CONDUIT THROUGH-OUT.
30. PROVIDE 60 AMP, 3 POLE DISCONNECT SWITCH WITH 3#8, 1#10 GROUND, 1" CONDUIT THROUGH-OUT.
31. PROVIDE 20 AMP, 2 POLE MOTOR RATED SWITCH FOR INSTA-HOT WATER HEATER DISCONNECTING MEANS, COORDINATE EXACT REQUIREMENTS AND LOCATIONS WITH EQUIPMENT SUPPLIER/INSTALLER PRIOR TO START OF WORK.
32. THERE SHALL BE NO EXPOSE CONDUIT WITHIN THE APPARATUS BAY.
33. PROVIDE 3/4" CONDUIT IN CMU WALL TO WEATHER PROOF JUNCTION BOX ABOVE DOOR AT 15'-4" FOR DOOR OBSTRUCTION DETECTION SYSTEM AND CONTROLS AND STUB-UP AS REQUIRED FOR A COMPLETE AND OPERABLE SYSTEM. COORDINATE EXACT LOCATION AND POINTS OF CONNECTION WITH DOOR SUPPLIER/ INSTALLER PRIOR TO START OF WORK.
34. RECEPTACLE OUTLET FOR KITCHEN HOOD. COORDINATE MOUNTING HEIGHT WITH KITCHEN HOOD PROVIDER/INSTALLER PRIOR TO START OF WORK.
35. RECEPTACLE FOR THREADMILL. COORDINATE RECEPTACLE NEMA CONFIGURATION WITH THREADMILL MANUFACTURER PRIOR TO START OF WORK.

STK
SUSTAINABLE TECHNOLOGY
42095 ZEVO DR., TEMECULA, CALIFORNIA 92590-3780
Phone: 951.296.9110 Fax: 951.296.6079 Email: stk@stkinc.com

CONSULTANT:
SALASO'BRIEN
[expect a difference]
3220 EXECUTIVE RIDGE
SUITE 210
VISTA, CA 92081
TEL: (760) 560-0100
#21189
ED | ES | SS | NP
www.salasobrien.com
E-Mail admin@tsqeng.com

PROJECT ADMINISTERED BY:
SAN BERNARDINO COUNTY
PROJECT & FACILITIES
MANAGEMENT DEPARTMENT

385 N. ARROWHEAD AVE.
SAN BERNARDINO, CA 92415

PROJECT NAME:
SAN BERNARDINO
COUNTY FIRE
DEPARTMENT:
FIRE STATION 226

PROJECT # 10.010.032

CIP #21-037

CAFM # SAB198

APN # 0273-011-22

1920 DEL ROSA AVE N.
SAN BERNARDINO,
CA 92404

ISSUE INFORMATION:

DATE:	INFORMATION:
04-11-2022	20% CD SET
04-28-2022	50% CD SET
06-15-2022	95% CD SET
09-16-2022	95% CD- 3rd BAY
10-03-2022	PLAN CHECK

SHEET INFORMATION:

STK PROJECT NO.: 374-154-21
SCALE: AS NOTED
DATE: JANUARY 2021
PLOT DATE: –
DRAWING NAME:

SEAL:

REGISTERED PROFESSIONAL ENGINEER
DAVID A. SPENCER
Exp. 6/30/23
ELECTRICAL
STATE OF CALIFORNIA

SHEET TITLE:

POWER
FLOOR PLAN

SHEET NO.:

E2.2

GENERAL NOTES

A. CONTRACTOR SHALL FIELD VERIFY EXISTING CONDITIONS AND COORDINATE WITH ALL OTHER TRADES. IN CASE OF DISCREPANCIES OR ANY POTENTIAL CONFLICTS, INFORM THE ARCHITECT AND ENGINEER IN WRITING PRIOR TO START OF WORK.

B. CONTRACTOR SHALL VERIFY EXACT QUANTITIES, LOCATIONS AND HEIGHTS OF ALL OUTLETS WITH TENANT AND ARCHITECT PRIOR TO START OF WORK.

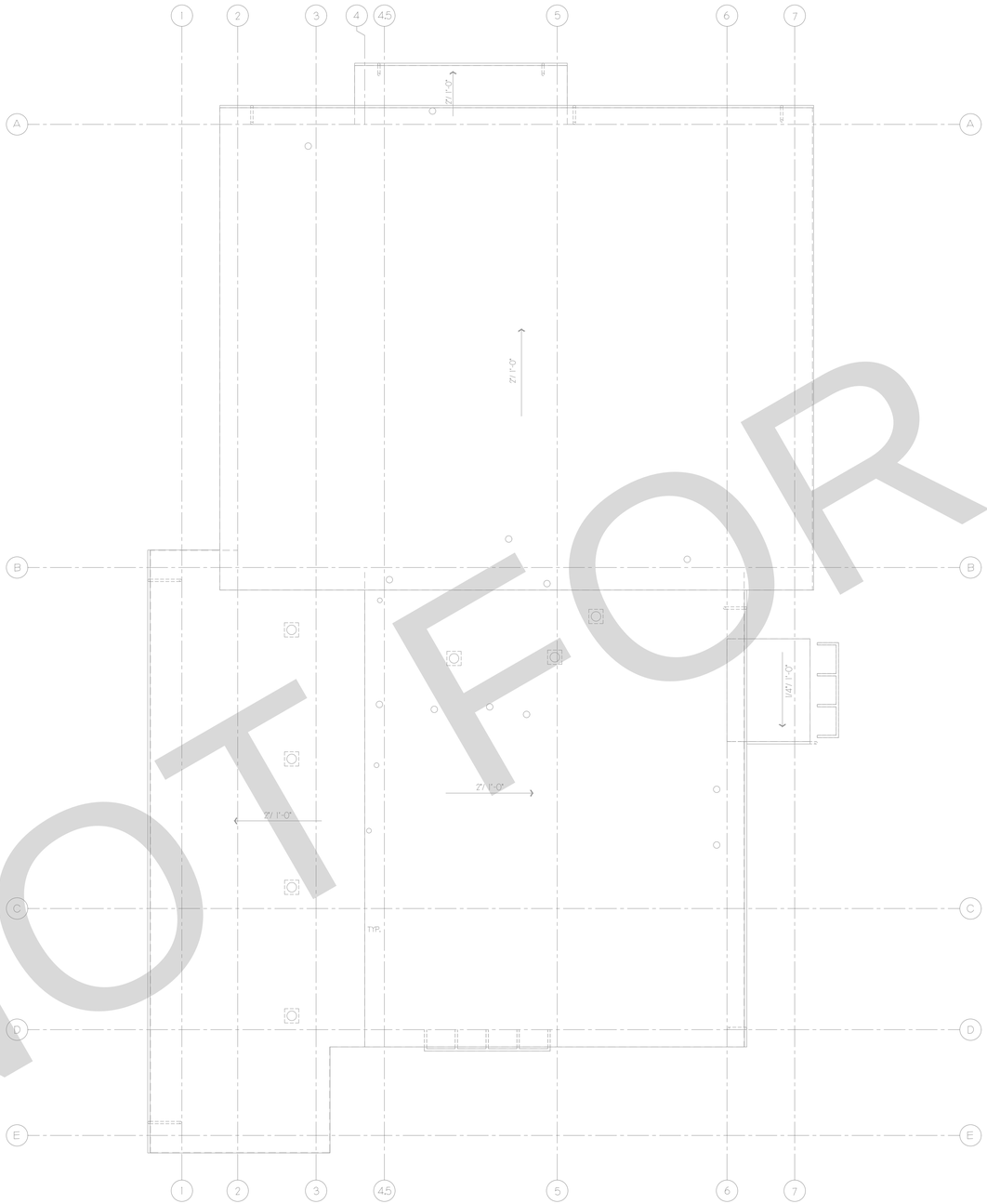

ELECTRICAL ROOF PLAN 1

1/8" = 1'-0"

NOT FOR BID

STK
42095 ZEVO DR., TEMECULA, CALIFORNIA 92590-3780
Phone: 951.296.9110 Fax: 951.296.6079 Email: stk@stkinc.com

CONSULTANT:

SALASO'BRIEN
[expect a difference]
3220 EXECUTIVE RIDGE
SUITE 210
VISTA, CA 92081
TEL: (760) 560-0100
#21189
ED | ES | SS | NP
www.salasobrien.com
E-Mail admin@tsqeng.com

PROJECT ADMINISTERED BY:

SAN BERNARDINO COUNTY
PROJECT & FACILITIES
MANAGEMENT DEPARTMENT

385 N. ARROWHEAD AVE.
SAN BERNARDINO, CA 92415

PROJECT NAME:

SAN BERNARDINO
COUNTY FIRE
DEPARTMENT:

FIRE STATION 226

PROJECT # 10.10.10.032

CIP #21-037

CAFM # SAB198

APN # 0273-011-22

1920 DEL ROSA AVE N.
SAN BERNARDINO,
CA 92404

ISSUE INFORMATION:

DATE:	INFORMATION:
04-11-2022	20% CD SET
04-28-2022	50% CD SET
06-15-2022	95% CD SET
09-16-2022	95% CD- 3rd BAY
10-03-2022	PLAN CHECK

SHEET INFORMATION:

STK PROJECT NO.: 374-154-21
SCALE: AS NOTED
DATE: JANUARY 2021
PLOT DATE: –
DRAWING NAME:

SEAL:

SHEET TITLE:

ELECTRICAL
ROOF PLAN

SHEET NO.:

E2.3

GENERAL NOTES

A. CONTRACTOR SHALL FIELD VERIFY EXISTING CONDITIONS AND COORDINATE WITH ALL OTHER TRADES. IN CASE OF DISCREPANCIES OR ANY POTENTIAL CONFLICTS, INFORM THE ARCHITECT AND ENGINEER IN WRITING PRIOR TO START OF WORK.

B. ALL WORK SHOWN IS NEW UNLESS NOTED OTHERWISE.

C. ALL CONDUCTORS SHALL BE COPPER UNLESS NOTED OTHERWISE.

KEY NOTES

1. REMOTE GENERATOR ANNUNCIATOR PANEL.
2. PROVIDE REVERSE FEED LISTED CIRCUIT BREAKER FOR PV INSTALLATION.
3. FRONIUS SYMO 15kW 15.0-3 (208) (5 STR) INVERTER WITH INTEGRAL AC AND DC DISCONNECTS, (6) INTEGRAL FUSED POSITIONS, (3) PER MPPT. SYSTEM SHOWN IS AN EXAMPLE, ELECTRICAL CONTRACTOR MAY, AT THEIR EXPENSE PROVIDE A DIFFERENT EQUIVALENT, COMPLETE, OPERABLE PV SYSTEM DESIGNED AND PERMITTED AT THEIR OWN EXPENSE.
4. THE EXISTING FIRE STATION BUILDING SHALL REMAIN FULLY FUNCTIONAL AND OCCUPIED DURING THE DURATION OF THE CONSTRUCTION OF THE NEW FIRE STATION. THE GENERAL CONTRACTOR SHALL PROVIDE ANY TEMPORARY UTILITIES THAT MAY BE REQUIRED FOR EITHER OR BOTH BUILDINGS TO REMAIN OPERATIONAL. THIS SHALL BE INCLUDED IN THE CONTRACTORS BID AND SHALL NOT INCUR ADDITIONAL COST TO THE OWNER. EXISTING FIRE STATION TO BE REMAIN AND IN OPERATIONAL, ALL UTILITIES CONNECTED TO EXISTING SHALL PROTECT IN PLACE DURING CONSTRUCTION OF THE PROJECT DURING PHASE 1.
5. DISCONNECT AND REMOVE ALL EXISTING UTILITIES (POWER, PHONE, DATA, ETC. BACK TO ITS ORIGINAL SOURCE ONCE THE NEW FIRE STATION IS COMPLETED DURING PHASE 2 OF THE CONSTRUCTION. ALL DEMOLITION OF THE EXISTING BUILDING DURING PHASE 2 OF THE PROJECT SHALL BE IN THE CONTRACTOR'S BID PROPOSAL FOR BOTH PHASES AND SHALL NOT INCUR ADDITIONAL COST TO THE OWNER.

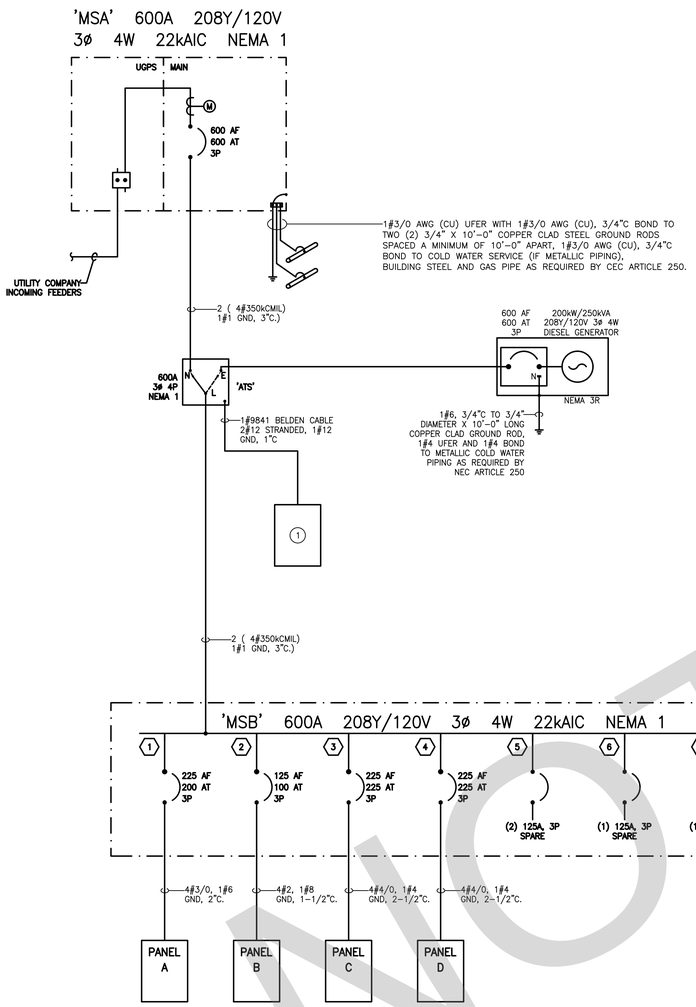

SINGLE LINE DIAGRAM 1
NO SCALE

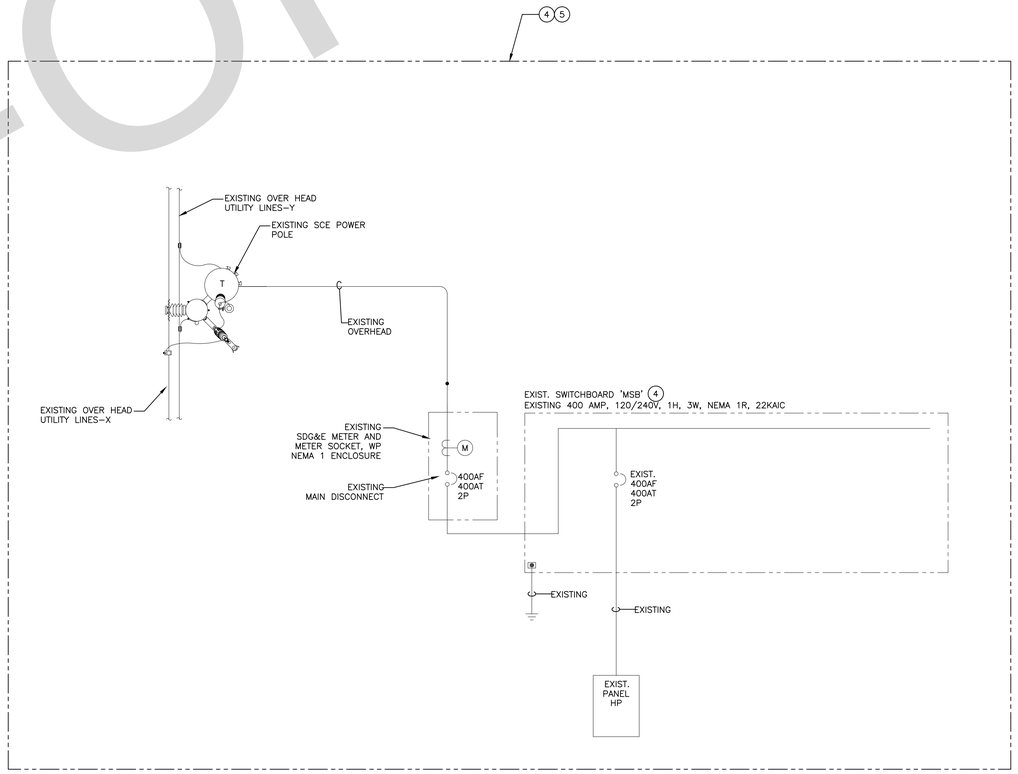

EXISTING SINGLE LINE DIAGRAM 2
NO SCALE

NOT FOR BID

STK
42095 ZEVO DR., TEMECULA, CALIFORNIA 92590-3780
Phone: 951.296.9110 Fax: 951.296.6079 Email: stk@stkinc.com

CONSULTANT:

SALASO'BRIEN
[expect a difference]
3220 EXECUTIVE RIDGE
SUITE 210
VISTA, CA 92081
TEL. (760) 560-0100
#21189
ED | ES | SS | NP
www.salasobrien.com
E-Mail admin@tlsgeng.com

PROJECT ADMINISTERED BY:
SAN BERNARDINO COUNTY
PROJECT & FACILITIES
MANAGEMENT DEPARTMENT

385 N. ARROWHEAD AVE.
SAN BERNARDINO, CA 92415

PROJECT NAME:
SAN BERNARDINO
COUNTY FIRE
DEPARTMENT:
FIRE STATION 226

PROJECT # 10.10.10.032
CIP #21-037
CAFM # SAB198
APN # 0273-011-22

1920 DEL ROSA AVE N.
SAN BERNARDINO,
CA 92404

ISSUE INFORMATION:

DATE:	INFORMATION:
04-11-2022	20% CD SET
04-28-2022	50% CD SET
06-15-2022	95% CD SET
09-16-2022	95% CD- 3rd BAY
10-03-2022	PLAN CHECK

SHEET INFORMATION:
STK PROJECT NO.: 374-154-21
SCALE: AS NOTED
DATE: JANUARY 2021
PLOT DATE: –
DRAWING NAME:

SEAL:
REGISTERED PROFESSIONAL ENGINEER
EDWARD A. BAUMGARTNER
No. E18809
Exp. 6/30/23
ELECTRICAL
STATE OF CALIFORNIA

SHEET TITLE:
SINGLE LINE
DIAGRAM AND
LOAD
SUMMARY

SHEET NO.:
E4.1

NOT FOR BID

PANEL: C | LOCATION: SEE PLANS | MAIN: 225A/3P | BUS: 225A | NEMA 1

VOLTAGE: 208 / 120 | AIC RATING: 10000 | FEED: BOTTOM | MTG: SURFACE

PHASE: 3 | CIRCUIT CODE:

WIRE: 4 | blank=NON-CONTINUOUS, N=NON-COINCIDENTAL, L=LONG CONTINUOUS, R=RECEPT (NEC ART. 220-44), K=KITCHEN

NOTE	DESCRIPTION	CODE	BKR	P	#	VA	PHASE	VA	#	P	BKR	CODE	DESCRIPTION	NOTE
	APPARATUS FAN	R	20	2	1	125	A	3109	2	2	40		CONDENSING UNIT CU-1	
	-		20		3		B	3109	4				-	
	APPARATUS FAN	R	20	2	5	125	C	3109	6	2	40		CONDENSING UNIT CU-2	
	-		20		7		A	3109	8				-	
	ELECTRICAL RM, WRK BENCH	R	20	1	9	720	B	3109	10	2	40		CONDENSING UNIT CU-3	
	LOBBY WATCH RECEPT	R	20	1	11	720	C	3109	12				-	
	LOBBY WATCH RECEPT	R	20	1	13	180	A	3276	14	2	60		CONDENSING UNIT CU-4	
	OFFICE RECEPT	R	20	1	15	720	B	3276	16				-	
	OFFICE RECEPT	R	20	1	17	720	C	3109	18	2	40		CONDENSING UNIT CU-5	
	OFFICE RECEPT	R	20	1	19	360	A	3109	20				-	
	LOBBY CONTROLLED RECEPT	R	20	1	21	720	B		22	2	20	R	APPARATUS DOORS	
	OFFICE CONTROLLED RECEPT	R	20	1	23	720	C		24				-	
	OFFICE CONTROLLED RECEPT	R	20	1	25	720	A		26				FUSED DISCONNECT APPARATUS	
	SCBA AREA RECEPT	R	20	1	27	540	B		28					
					29		C		30					
	WASHER - EXTRACTOR	R	15	3	31	612	A	6240	32	3	60	R	DRYER	
	-				33	612	B	6240	34				-	
	-				35	612	C	6240	36				-	
					37		A	125	38	2	20		APPARTUS FAN	
	APPARATUS DOORS	R	20	2	39	30	B	125	40				-	
	-		20		41		C		42					

CONNECTED VA Ø A	20965	CONNECTED VA ( )	45378	PANEL CONN. AMPS WITH LCL	162.74	PANEL DEMAND KVA WITH LCL	57.00
CONNECTED VA Ø B	19201	CONNECTED VA (L)	0	CONNECTED VA WITH LCL (L)	0	PANEL DEMAND AMPS WITH LCL	158.23
CONNECTED VA Ø C	18464	CONNECTED VA (R)	13252	DEMAND VA (R)	11626	PANEL CONNECTED AMPS	162.74
TOTAL VA	58630	CONNECTED VA (K)	0	DEMAND VA (K)	0	DEMAND HIGH Ø AMPS WITH LCL	166.16

1 6 SPECIAL NOTES:
2 7
3 8
4 9
5 10

PANEL: D | LOCATION: SEE PLANS | MAIN: 225A/3P | BUS: 225A | NEMA 1

VOLTAGE: 208 / 120 | AIC RATING: 10000 | FEED: BOTTOM | MTG: SURFACE

PHASE: 3 | CIRCUIT CODE:

WIRE: 4 | blank=NON-CONTINUOUS, N=NON-COINCIDENTAL, L=LONG CONTINUOUS, R=RECEPT (NEC ART. 220-44), K=KITCHEN

NOTE	DESCRIPTION	CODE	BKR	P	#	VA	PHASE	VA	#	P	BKR	CODE	DESCRIPTION	NOTE
	EXHAUST FAN 8,9,10	R	20	1	1	210	A	1464	2	1	20		FAU 1	
	EXHAUST FAN 4,5,6	R	20	1	3	210	B	1464	4	1	20		FAU 2	
	EXHAUST FAN 3	R	20	1	5	53	C	1464	6	1	20		FAU 3	
	EXHAUST FAN 2	R	20	1	7	107	A	1464	8	1	20		FAU 4	
	EXHAUST FAN 1	R	20	1	9	5	B	1464	10	1	20		FAU 5	
	APPARATUS CORD REEL	R	20	2	11	800	C	73	12	1	20		WH-1	
	SUPPLY FAN 1	R	20	1	19	107	A	76	20	1	20		LIGHTING STORAGE	
	APPARATUS CORD REEL	R	20	2	21	800	B		22	1	20		POWER STORAGE	
	-				23	800	C		24	1	20		GARAGE DOOR CONTROL	
	DOOR OBSTRUCTION SENSOR	R	20	1	25		A		26	1	20		GARAGE DOOR CONTROL	
	DOOR OBSTRUCTION SENSOR	R	20	1	27		B		28	1	20		EXTERIOR GARAGE RECEP	
	DOOR OBSTRUCTION SENSOR	R	20	1	29		C		30	1	20		SPARE	
	SPARE		20	1	31		A		32	1	20		SPARE	
	SPARE		20	1	33		B		34	1	20		SPARE	
	SPARE		20	1	35		C		36	1	20		SPARE	
	SPARE		20	1	37		A		38	1	20		SPARE	
	SPARE		20	1	39		B		40	1	20		SPARE	
	SPARE		20	1	41		C		42	1	20		SPARE	
	SPARE		20	1	43		A		44	1	20		SPARE	
	SPARE		20	1	45		B		46	1	20		SPARE	
	SPARE		20	1	47		C		48	1	20		SPARE	
	POWER LOADS ABOVE - SPLIT-BUS - MECHANICAL LOADS BELOW													
	SPARE		20	1	49		A		50	1	20		SPARE	
	SPARE		20	1	51		B		52	1	20		SPARE	
	SPARE		20	1	53		C		54	1	20		SPARE	
	SPARE		20	1	55		A		56	1	20		SPARE	
	SPARE		20	1	57		B		58	1	20		SPARE	
	SPARE		20	1	59		C		60	1	20		SPARE	
	SPARE		20	1	61		A		62	1	20		SPARE	
	SPARE		20	1	63		B		64	1	20		SPARE	

CONNECTED VA Ø A	4696	CONNECTED VA ( )	8737	PANEL CONN. AMPS WITH LCL	37.28	PANEL DEMAND KVA WITH LCL	13.43
CONNECTED VA Ø B	4743	CONNECTED VA (L)	0	CONNECTED VA WITH LCL (L)	0	PANEL DEMAND AMPS WITH LCL	37.28
CONNECTED VA Ø C	3990	CONNECTED VA (R)	4692	DEMAND VA (R)	4692	PANEL CONNECTED AMPS	37.28
TOTAL VA	13429	CONNECTED VA (K)	0	DEMAND VA (K)	0	DEMAND HIGH Ø AMPS WITH LCL	39.50

1 6 SPECIAL NOTES:
2 7
3 8
4 9
5 10

PANEL: A | LOCATION: SEE PLANS | MAIN: 200A/3P | BUS: 200A | NEMA 1

VOLTAGE: 208 / 120 | AIC RATING: 10000 | FEED: BOTTOM | MTG: SURFACE

PHASE: 3 | CIRCUIT CODE:

WIRE: 4 | blank=NON-CONTINUOUS, N=NON-COINCIDENTAL, L=LONG CONTINUOUS, R=RECEPT (NEC ART. 220-44), K=KITCHEN

NOTE	DESCRIPTION	CODE	BKR	P	#	VA	PHASE	VA	#	P	BKR	CODE	DESCRIPTION	NOTE
1a,3	SLEEPING QUARTER 1 REC		20	1	1	720	A	540	2	1	20		HALLWAY 2, MECH RM REC	1h
1a,3	SLEEPING QUARTER 2 REC		20	1	3	720	B	540	4	1	20		STOR 3, PANTRY REC.	1g
1b,3	SLEEPING QUARTER 3 REC		20	1	5	720	C	540	6	1	20		STOR 1, ADA BATH REC.	1g
1b,3	SLEEPING QUARTER 4 REC		20	1	7	720	A		8	1	20		SPARE	
1b,3	SLEEPING QUARTER 5 REC		20	1	9	720	B		10	1	20		SPARE	
1c,3	SLEEPING QUARTER 6 REC		20	1	11	720	C	540	12	1	20		PATIO	
1c,3	SLEEPING QUARTER 7 REC		20	1	13	720	A	900	14	1	20		KITCHEN COUNTER RECEPTS	1n
1c,3	SLEEPING QUARTER 8 REC		20	1	15	720	B	1000	16	1	20		MICROWAVE	1n
4	SLEEPING QUARTER SMK DETECTORS		20	1	17	800	C	1000	18	1	20		MICROWAVE	1n
	BATH 2,3,4 & STOR 2 RECEPTS		20	1	19	540	A	1200	20	1	20		DISHWASHER	1k
	HALLWAY 1 & CU AREA RECEPTS		20	1	21	720	B	1200	22	1	20		DISHWASHER	1k
1d	FITNESS EQUIPMENT 1		20	1	23	1600	C	1130	24	1	20		KITCHEN DISPOSAL	1k
1d	FITNESS EQUIPMENT 2		20	1	25	1600	A	1500	26	1	20		KITCHEN ISLAND RECEPT	
1d	FITNESS EQUIPMENT 3		20	1	27	1600	B	1500	28	1	20		WASHER	
1e	FITNESS EQUIPMENT 4		20	1	29	1600	C	1500	30	1	20		DRYER	
1e	FITNESS EQUIPMENT 5		20	1	31	1600	A	540	32	1	20		HALLWAY 1,BATH 1, LAUNDRY REC	
1e	FITNESS RECEPTS		20	1	33	1080	B	540	34	1	20		SPARE	
	SPARE		20	1	35	1080	C	912	36	1	20		ICE MAKER	
1f	DAY ROOM USB RECEPTS		20	1	37	1080	A	1080	38	1	20		LOCKER RM, APPARTUS,JANITOR	
1f	DAY ROOM RECEPTS		20	1	39	1260	B	500	40	1	20		KITCHEN EXHAUST HOOD	
1f	COFFEE MAKER		20	1	41	1500	C	500	42	1	20		KITCHEN EXHAUST HOOD	
1g	COMM REC		20	1	43	500	A	1000	44	1	20		KITCHEN REF. REC	1m
1g	COMM REC		20	1	45	500	B	1000	46	1	20		KITCHEN REF. REC	1m
1g	COMM REC		20	1	47	500	C	1000	48	1	20		KITCHEN REF. REC	1m
	SPARE		20	1	49		A		50	1	20		SPARE	
	SPARE		20	1	51		B		52	1	20		SPARE	
	SPARE		20	1	53		C		54	1	20		SPARE	
	SPARE		20	1	55		A		56	1	20		SPARE	
	SPARE		20	1	57		B		58	1	20		SPARE	
	SPARE		20	1	59		C		60	1	20		SPARE	
	SPARE		20	1	61		A		62	1	20		SPARE	
	SPARE		20	1	63		B		64	1	20		SPARE	
	SPARE		20	1	65		C		66	1	20		SPARE	

CONNECTED VA Ø A	14240	CONNECTED VA ( )	43482	PANEL CONN. AMPS WITH LCL	120.69	PANEL DEMAND KVA WITH LCL	43.48
CONNECTED VA Ø B	13600	CONNECTED VA (L)	0	CONNECTED VA WITH LCL (L)	0	PANEL DEMAND AMPS WITH LCL	120.69
CONNECTED VA Ø C	15642	CONNECTED VA (R)	0	DEMAND VA (R)	0	PANEL CONNECTED AMPS	120.69
TOTAL VA	43482	CONNECTED VA (K)	0	DEMAND VA (K)	0	DEMAND HIGH Ø AMPS WITH LCL	130.25

1 PROVIDE LISTED HANDLE-TIE DEVICE 5 SPECIAL NOTES:
2 PROVIDE DEDICATED NEUTRAL 6
3 PROVIDE AFCI TYPE CIRCUIT BREAKER AND 7
TAMPERPROOF SPECIFICATION RECEPTACLES 8
4 PROVIDE CIRCUIT BREAKER LOCK-ON DEVICE 9

PANEL: B | LOCATION: SEE PLANS | MAIN: 100A/3P | BUS: 125A | NEMA 1

VOLTAGE: 208 / 120 | AIC RATING: 10000 | FEED: BOTTOM | MTG: SURFACE

PHASE: 3 | CIRCUIT CODE:

WIRE: 4 | blank=NON-CONTINUOUS, N=NON-COINCIDENTAL, L=LONG CONTINUOUS, R=RECEPT (NEC ART. 220-44), K=KITCHEN

NOTE	DESCRIPTION	CODE	BKR	P	#	VA	PHASE	VA	#	P	BKR	CODE	DESCRIPTION	NOTE
	LOBBY,LAUNDRY,MECH,COMM,A	L	20	1	1	900	A	900	2	1	20	L	SLEEP QUARTER 4,5,6 LIGHT	
	HALLWAY LIGHTS & EXIT SIGNS	L	20	1	3	900	B	900	4	1	20	L	SLEEP QUARTER 1,2,3 LIGHT	
	LOCKER RM,JANITOR,FSR LTG,E	L	20	1	5	900	C	900	6	1	20	L	BATH 1,2,3,4 & STOR 2	
	APPARATUS LIGHTING	L	20	1	7	900	A	900	8	1	20	L	FITNESS & PATIO LIGHTS	
1	EXTERIOR BUILDING LIGHTS	L	20	1	9	900	B	900	10	1	20	L	DAY ROOM AND KITCHEN LIGHTS	
1	CANNOPY LIGHTING	L	20	1	11	114	C	100	12	1	20	L	BOLLARD & INGROUND LAMP	1
	APPARATUS LIGHTING	L	20	1	19	900	A		20	1	20		IRRIGATION CONTROLLER	
1	SITE POLE LIGHTING	L	20	2	21	1000	B		22	1	20		SPARE	
	-				23	1000	C		24	1	20		SPARE	
	SPARE		20	1	25		A		26	1	20		SPARE	
	SPARE		20	1	27		B		28	1	20		SPARE	
	SPARE		20	1	29		C		30	1	20		SPARE	
	SPARE		20	1	31		A		32	1	20		SPARE	
	SPARE		20	1	33		B		34	1	20		SPARE	
	SPARE		20	1	35		C		36	1	20		SPARE	
	SPACE				37		A		38				SPACE	
	SPACE				39		B		40				SPACE	
	SPACE				41		C		42				SPACE	

CONNECTED VA Ø A	4500	CONNECTED VA ( )	1260	PANEL CONN. AMPS WITH LCL	42.96	PANEL DEMAND KVA WITH LCL	15.48
CONNECTED VA Ø B	4860	CONNECTED VA (L)	11374	CONNECTED VA WITH LCL (L)	14218	PANEL DEMAND AMPS WITH LCL	42.96
CONNECTED VA Ø C	3274	CONNECTED VA (R)	0	DEMAND VA (R)	0	PANEL CONNECTED AMPS	35.07
TOTAL VA	12634	CONNECTED VA (K)	0	DEMAND VA (K)	0	DEMAND HIGH Ø AMPS WITH LCL	50.59

1 CIRCUIT ROUTED THRU TIMECLOCK, CONTACTOR OR LCP 6 SPECIAL NOTES:
2 7
3 8
4 9
5 10

–	C	A
–	D	B
–	–	–

STK ARCHITECTURE, INC.
42095 ZEVO DR., TEMECULA, CALIFORNIA 92590-3780
Phone: 951.296.9110 Fax: 951.296.6079 Email: stk@stkinc.com

CONSULTANT:

SALASO'BRIEN
| expect a difference |
3220 EXECUTIVE RIDGE
SUITE 210
VISTA, CA 92081
TEL: (760) 560-0100
#21189
ED ES SS NP
www.salasobrien.com
E-Mail admin@tsqeng.com

PROJECT ADMINISTERED BY:

SAN BERNARDINO COUNTY
PROJECT & FACILITIES
MANAGEMENT DEPARTMENT

385 N. ARROWHEAD AVE.
SAN BERNARDINO, CA 92415

PROJECT NAME:

SAN BERNARDINO COUNTY FIRE DEPARTMENT:
FIRE STATION 226

PROJECT # 10.10.1032

CIP #21-037

CAFM # SAB198

APN # 0273-011-22

1920 DEL ROSA AVE N.
SAN BERNARDINO,
CA 92404

ISSUE INFORMATION:

DATE:	INFORMATION:
04-11-2022	20% CD SET
04-28-2022	50% CD SET
06-15-2022	95% CD SET
09-16-2022	95% CD- 3rd BAY
10-03-2022	PLAN CHECK

SHEET INFORMATION:

STK PROJECT NO.: 374-154-21
SCALE: AS NOTED
DATE: JANUARY 2021
PLOT DATE: –
DRAWING NAME:

SEAL:

REGISTERED PROFESSIONAL ENGINEER
EDUARDO A. DAVID
No. E18809
Exp. 6/30/23
ELECTRICAL
STATE OF CALIFORNIA

SHEET TITLE:

PANEL SCHEDULES

SHEET NO.:

E4.2

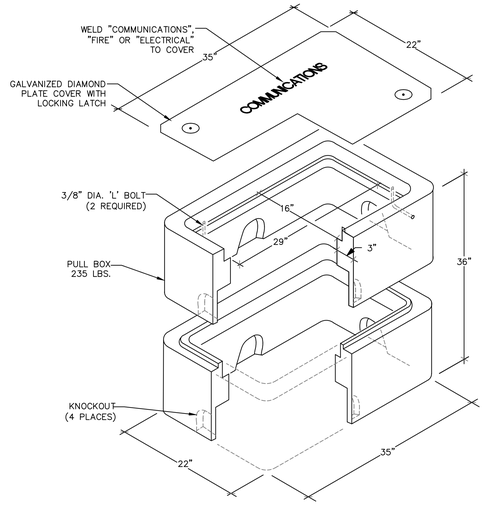

SCALE NONE 10 **UNDERGROUND HANDHOLE**

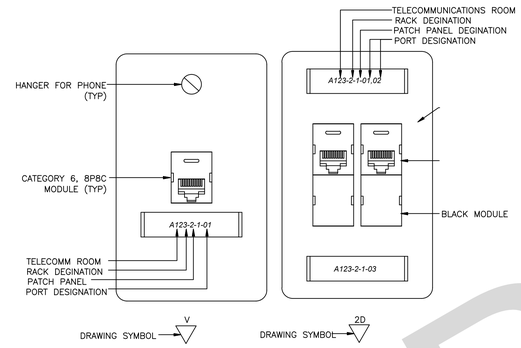

SCALE NONE 7 **TELECOMM WALL FACEPLATES**

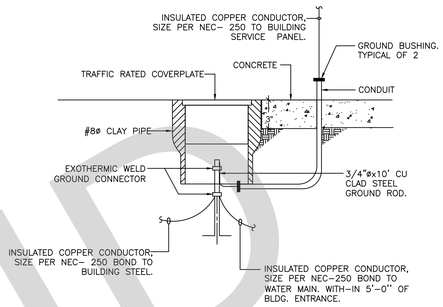

SCALE NONE 4 **GROUNDING DETAIL**

SCALE NONE 11

SCALE NONE 8 **T-GRID FIXTURE SEISMIC SUPPORTS**

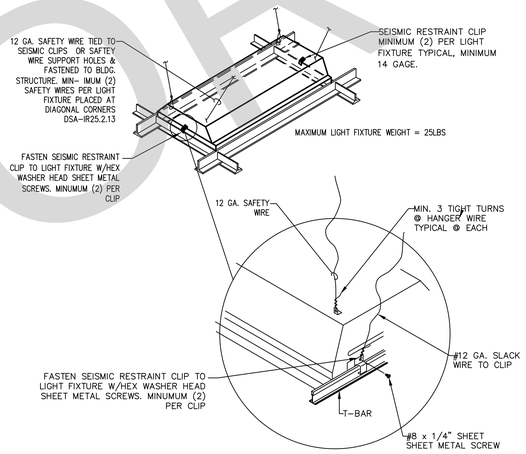

SEISMIC RESTRAINT CLIP DETAIL

SCALE NONE 5 **UNDERGROUND TRENCHING DETAIL**

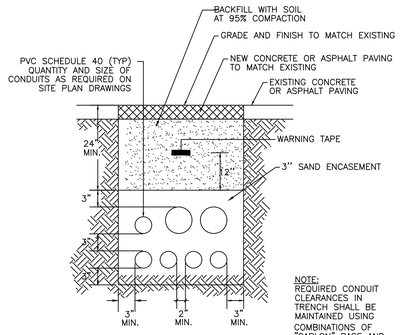

NOTE:
REQUIRED CONDUIT CLEARANCES IN TRENCH SHALL BE MAINTAINED USING COMBINATIONS OF "CARLON" BASE AND INTERMEDIATE SPACERS OR EQUIVALENT.

NOTE: 1. CONTRACTOR SHALL MAINTAIN A 12" SEPARATION BETWEEN POWER AND SIGNAL CONDUITS.

SCALE NONE 12

SCALE NONE 9

SCALE NONE 6 **SURFACE MOUNT PANEL**

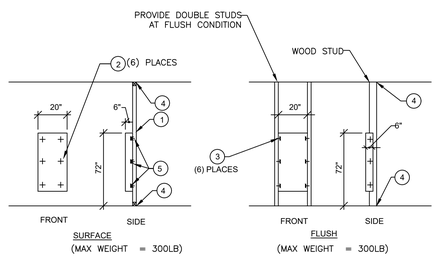

NOTES :

1. WOOD STUD
2. #10 WOOD SCREW WITH 1.5" EMBED TO 4X MIN. WITH A34 T&B EACH SITE BLOCKING BETWEEN WOOD STUDS
3. #10 WOOD SCREW WITH 1.5" EMBED TOTAL OF 6
4. MOUNTING @ WOOD STUDS, SEE STRUCTURAL DETAILS. (STUD SIZE AND ANCHORAGE AT TOP AND BOTTOM VARIES DEPENDING ON PANEL LOCATION)

SCALE NONE 3

NOT FOR BID

STK
42095 ZEVO DR., TEMECULA, CALIFORNIA 92590-3780
Phone: 951.296.9110 Fax: 951.296.6079 Email: stk@stkinc.com

CONSULTANT:
SALASO'BRIEN
[expect a difference]
3220 EXECUTIVE RIDGE
SUITE 210
VISTA, CA 92081
TEL: (760) 560-0100
#21189
ED | ES | SS | NP
www.salasobrien.com
E-Mail admin@tsqeng.com

PROJECT ADMINISTERED BY:
SAN BERNARDINO COUNTY
PROJECT & FACILITIES
MANAGEMENT DEPARTMENT

385 N. ARROWHEAD AVE.
SAN BERNARDINO, CA 92415

PROJECT NAME:
SAN BERNARDINO COUNTY FIRE DEPARTMENT:
FIRE STATION 226

PROJECT # 10.10.10.032
CIP #21-037
CAFM # SAB198
APN # 0273-011-22

1920 DEL ROSA AVE N.
SAN BERNARDINO,
CA 92404

ISSUE INFORMATION:

DATE:	INFORMATION:
04-11-2022	20% CD SET
04-28-2022	50% CD SET
06-15-2022	95% CD SET
09-16-2022	95% CD- 3rd BAY
10-03-2022	PLAN CHECK

SHEET INFORMATION:
STK PROJECT NO.: 374-154-21
SCALE: AS NOTED
DATE: JANUARY 2021
PLOT DATE: –
DRAWING NAME:

SEAL:
REGISTERED PROFESSIONAL ENGINEER
EDWARD A. SIMON
LICENSE NO. E18809
Exp. 6/30/23
ELECTRICAL
STATE OF CALIFORNIA

SHEET TITLE:
ELECTRICAL DETAILS

SHEET NO.:
E5.1

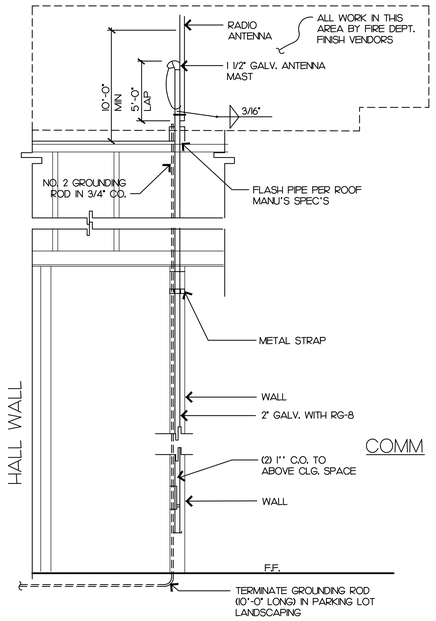

DETAIL — SCALE: NTS — 2

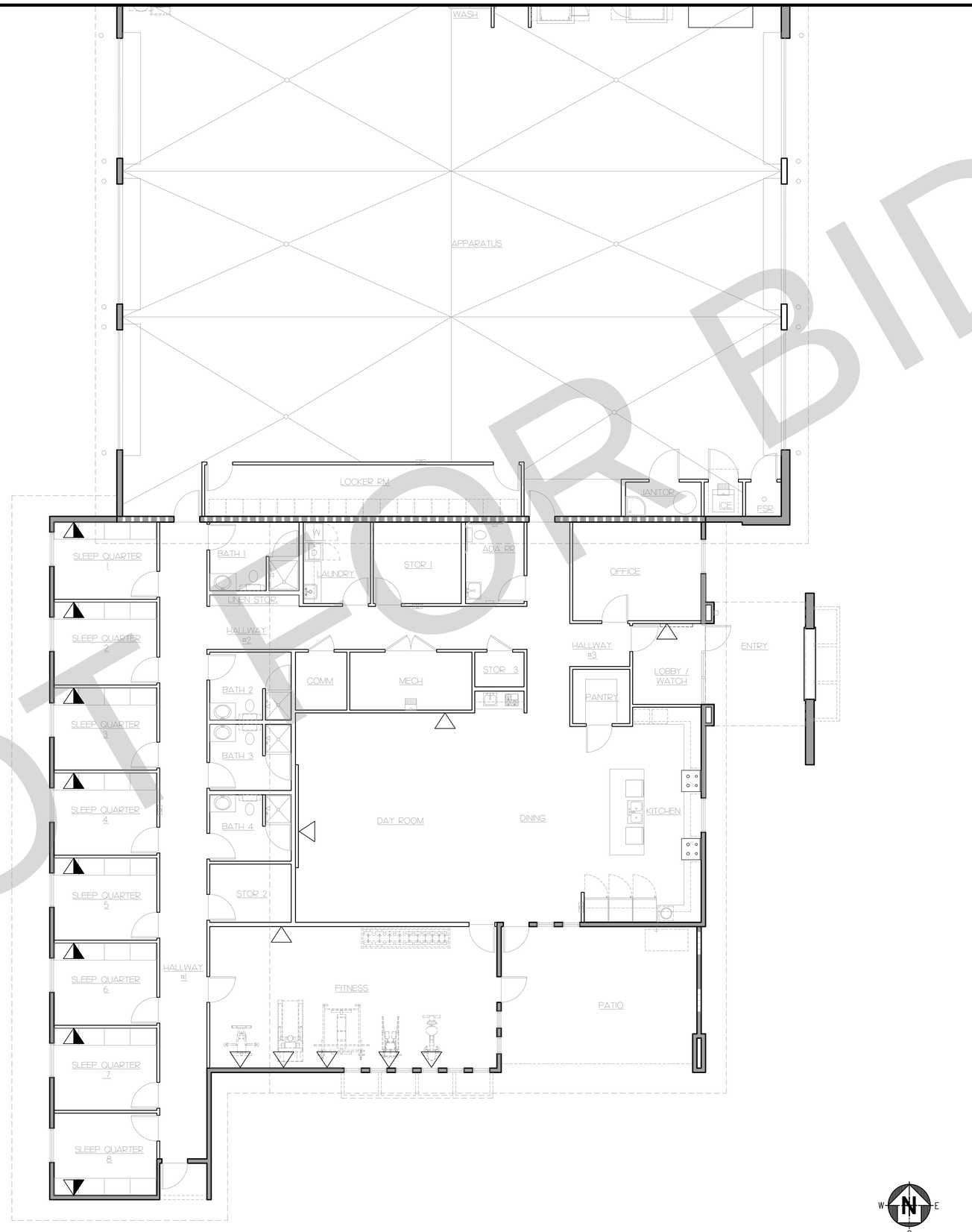

COMMUNICATIONS PLAN — SCALE: 3/16"=1'-0" — 1

NOT FOR BID

KEY NOTE

SYMBOL LEGEND

- DATA JUNCTION BOX
- TELE/DATA JUNCTION BOX

STK
42095 ZEVO DR., TEMECULA, CALIFORNIA 92590-3780
Phone: 951.296.9110 Fax: 951.296.6079 Email: stk@stkinc.com

CONSULTANT:

PROJECT ADMINISTERED BY:
SAN BERNARDINO COUNTY
PROJECT & FACILITIES
MANAGEMENT DEPARTMENT

385 N. ARROWHEAD AVE.
SAN BERNARDINO, CA 92415

PROJECT NAME:

SAN BERNARDINO
COUNTY FIRE
DEPARTMENT:

FIRE STATION 226

PROJECT # 10.10.10.032

CIP #21-037

CAFM # SAB198

APN # 0273-011-22

1920 DEL ROSA AVE N.
SAN BERNARDINO,
CA 92404

ISSUE INFORMATION:

DATE:	INFORMATION:
04-11-2022	20% CD SET
04-28-2022	50% CD SET
06-15-2022	95% CD SET
09-16-2022	95% CD- 3rd BAY
10-03-2022	PLAN CHECK

SHEET INFORMATION:

STK PROJECT NO.: 374-154-21
SCALE: AS NOTED
DATE: JANUARY 2021
PLOT DATE: –
DRAWING NAME:

SEAL:

LICENSED ARCHITECT
ANTONIO FINAZZI
No. C31476
REN. 07-31-23
STATE OF CALIFORNIA

SHEET TITLE:

DATA PLAN

SHEET NO.:

DATA2.1

J:\374-SANBNRD\374-154-21 SBC Fire Station No. 226\Architecture\Data\FA2.1- DATA PLAN.dwg
09/30/2022 4:48PM

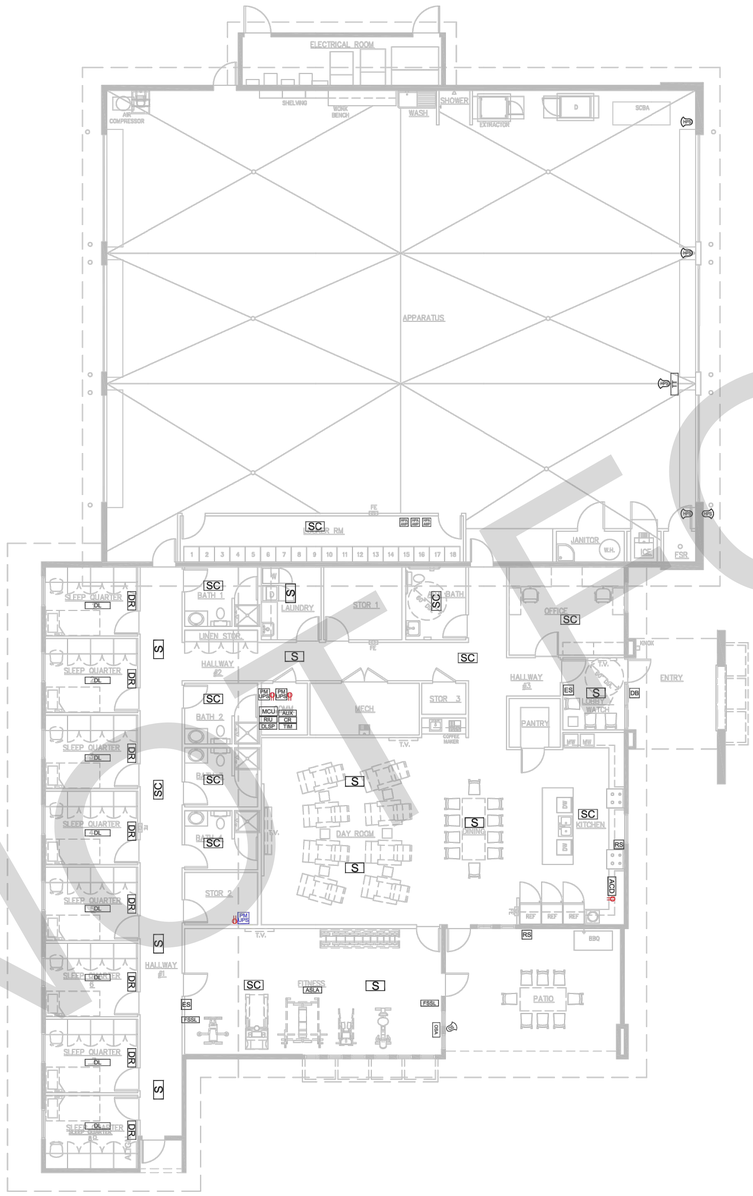

ALERT SYSTEM - DEVICE LAYOUT

SCALE: N.T.S.

FIRST-IN FIRE STATION ALERTING
SYMBOL LEGEND

MCU	MASTER CONTROL UNIT
DLSP	DATA LINE SURGE PROTECTOR
TIM	TELEPHONE INTERFACE MODULE
CR	CONTROL REMOTE
RIU	RADIO ISOLATION UNIT
AUX	AUXILLIARY MODULE
PM UPS	POWER MODULE WITH UPS - BLACK (DEDICATED 120V CIRCUIT REQUIRED) EACH PM ON INDIVIDUAL BREAKER
PM UPS	POWER MODULE WITH UPS - BLUE (DEDICATED 120V CIRCUIT REQUIRED) EACH PM ON INDIVIDUAL BREAKER
ACD	APPLIANCE CONTROLLER DEVICE (DEDICATED 120V CIRCUIT REQUIRED)
RCS	APPLIANCE RESET SWITCH
SC	SATELLIGHT CONTROLLER
S	SATELLIGHT
FSSL	STROBE LIGHT - IN CONJUNCTION WITH ASLA
ASLA	ALERTING STROBE LIGHT ADAPTER
DR	DORM REMOTE
DL	DORM LIGHT
HPA	HIGH-POWERED AMPLIFIED SPEAKER
HPA AMP	HIGH-POWERED AMPLIFIER MODULE
OSA	OUTSIDE SPEAKER AUDIO MODULE
OS	OUTSIDE SPEAKER - IN CONJUNCTION WITH TIM
TT	TURNOUT TIMER
ES	EMERGENCY SWITCH
DB	DOORBELL BUTTON

GENERAL NOTES

1. DEVICES ARE TYPICAL AND FOR REFERENCE ONLY.
2. ALL BACK BOXES & CONDUITS ARE TO BE FLUSH MOUNTED UNLESS OTHERWISE SPECIFIED FOR NEW CONSTRUCTION.
3. DEVICES LOCATED IN ACOUSTICAL CEILINGS DO NOT REQUIRE BACKBOXES
4. DEVICES LOCATED IN ACOUSTICAL CEILINGS REQUIRE ACOUSTICAL WESTNET MOUNTING KIT (SSATKIT-A)
5. DEVICES ONLY LOCATED IN SHEETROCK OR EXPOSED CEILINGS REQUIRE HOFFMAN BRAND 8X10X4 BACKBOX
6. DEVICES ONLY LOCATED IN SHEETROCK OR EXPOSED CEILINGS REQUIRE APPROPRIATE WESTNET MOUNTING KIT (SURFACE MOUNT OR FLUSH MOUNT) FOR NEW CONSTRUCTION.
7. LOCATIONS OF DEVICES DETERMINED AT INSTALLATION BY INSTALLER FOR NEW CONSTRUCTION.
8. SEE ARCHITECTURAL SPECIFICATION FOR ALL ROUGH-IN AND INSTALLATION DETAILS FOR NEW CONSTRUCTION.
9. INSTALLER TO VERIFY WALL AND CEILING TYPE TO DETERMINE NEED FOR FLUSH OR SURFACE MOUNT INSTALLATION OF EQUIPMENT SPECIFIED FOR NEW CONSTRUCTION.
10. ALL WIRING AND DEVICES TO BE INSTALLED BY WESTNET.
11. ALL PENETRATION TO EXTERIOR DEVICES MUST BE WEATHERPROOF AND FIRE CAULKED FOR CONSTRUCTION BY OTHERS.
12. DEVICES LOCATED IN BATHROOM/SHOWER AREAS MUST BE VISIBLE FROM SHOWERS. INSTALLER TO FIELD VERIFY DEVICE LOCATION. (TYPICAL)
13. ALL DEVICES MUST BE KEPT CLEAR OF OBSTRUCTIONS & CEILING FAN BLADES.
14. IN ACOUSTICAL CEILING (T-BAR), WIRE CABLING IS FREE WIRE (NOT IN CONDUIT).
15. IN GYPSUM BOARD CEILING (SHEET ROCK / HARD LID), WIRE CABLING IN IN 3/4" CONDUIT UNLESS CONDUIT SIZE OTHERWISE NOTED.
16. IN EXPOSED AREAS ONLY 8X10X4 HOFFMAN BACK BOX MOUNTED AT +10'-0" A.F.F. MAX. WITH OPEN FACE DOWN IN CENTER OF ROOM WITH 3/4" CONDUIT TO ACCESSIBLE CEILING SPACE. KEEP CLEAR OF OBSTRUCTIONS.
17. AN INDIVIDUAL GAS CONTROL VALVE IS REQUIRED FOR EACH COOKING APPLIANCE WITH A RESET SWITCH WITHIN 6'-0" FT. OF EACH COOKING APPLIANCE.
18. A 5 OHM EARTH GROUND MUST BE CONNECTED TO THE RADIO ISOLATION UNIT IN THE COMMUNICATION RACK.
19. THE RADIO RECEIVING THE DISPATCH INFORMATION SHALL BE LOCATED WITHIN 6'-0" FT. OF THE RADIO ISOLATION UNIT.
20. INSTALLER TO PROVIDE ONE ADDITIONAL UNCONNECTED BLUE CAT5 CABLE WITH RJ45 CONNECTORS ON BOTH ENDS BETWEEN THE MCU LOCATION AND EACH ALERTING END POINT FOR NETWORK CONNECTIVITY.

WESTNET/FIRST IN SYSTEM LAYOUT REVIEW

PROJECT: FIRE STATION No. 226

DEPARTMENT: SAN BERNARDINO COUNTY FIRE DEPARTMENT

DATE SUBMITTED: 07/27/22

☐ Approved subject to notations and corrections as indicated.

____ Re-submit corrected Layout for our approval.

____ Re-submittal of Layout not required.

☐ Rejected/Re-submit Layout

Remarks: _____

DATE RETURNED:

REVIEWED BY: _____

DEPT TITLE:

This serves to Certify that this Layout submittal(s) have been reviewed for accuracy and compliance with the general conformance of the design and layout(only) with the Department Contact and/or Contract Documents.

ONLY AFTER APPROVAL OF LAYOUT WILL SUBMITTAL INFORMATION AND QUOTES BE AVAILABLE.

Westnet, Inc.
15542 Chemical Lane
Huntington Beach, CA 92649

Phone: (714) 548-3500
Fax: (714) 901-5610
www.FirstInAlerting.com

WESTNET®
15542 CHEMICAL LANE
HUNTINGTON BEACH, CA 92649
TEL: (714) 548-3500 FAX (714) 901-5610
www.FirstInAlerting.com

COPYRIGHT 2022
WESTNET INC.
ALL RIGHTS RESERVED

REV	REVISION	DATE	BY
1	DEVICE LAYOUTS	06/09/22	MAC
2	DEVICE REVISIONS	06/24/22	MAC
3	BACKGROUND REVISIONS	07/27/22	MAC

FIRST-IN

ALERT SYSTEM

PROJECT NAME:

FIRE STATION No. 226
SAN BERNARDINO COUNTY
FIRE DEPARTMENT
1920 DEL ROSA AVE N.
SAN BERNARDINO, CA 92404

NOTE: 0 1
IF THIS SCALE IS NOT 1". THIS SHEET IS NOT TO SCALE.

PROJECT START DATE:

DRAWN BY: MAC

SCALE: N.T.S.

TITLE: DEVICE LAYOUT

SHEET
AS1.1

STK
42095 ZEVO DR., TEMECULA, CALIFORNIA 92590-3780
Phone: 951.296.9110 Fax: 951.296.6079 Email: stk@stkinc.com

CONSULTANT:

PROJECT ADMINISTERED BY:
SAN BERNARDINO COUNTY
PROJECT & FACILITIES
MANAGEMENT DEPARTMENT

385 N. ARROWHEAD AVE.
SAN BERNARDINO, CA 92415

PROJECT NAME:

SAN BERNARDINO
COUNTY FIRE
DEPARTMENT:

FIRE STATION 226

PROJECT # 10.10.10.32

CIP #21-037

CAFM # SAB198

APN # 0273-011-22

1920 DEL ROSA AVE N.
SAN BERNARDINO,
CA 92404

ISSUE INFORMATION:

DATE:	INFORMATION:
04-11-2022	20% CD SET
04-28-2022	50% CD SET
06-15-2022	95% CD SET
09-16-2022	95% CD- 3rd BAY
10-03-2022	PLAN CHECK

SHEET INFORMATION:

STK PROJECT NO.: 374-154-21
SCALE: AS NOTED
DATE: JANUARY 2021
PLOT DATE: –
DRAWING NAME:

SEAL:

LICENSED ARCHITECT
ANTONIO FINALDI
No. C31476
REN. 07-31-23
STATE OF CALIFORNIA

SHEET TITLE:

FIRE ALERT
SYSTEM

SHEET NO.:

DATA2.2

NOT FOR BID

J:\374-SAN#NAD\374-154-11 SBC Fire Station No. 226\Architecture\Bid Pkg 2-FIRE ALERT SYSTEM.dwg
09/09/2022 4:50PM