Savely
Healthcare Architects

ADDENDUM NO. 02
TO THE CONSTRUCTION DOCUMENTS BID PACKAGE

Client: Arrowhead Regional Medical Center

Project: Oncology-Ambulatory Clinic

SHA Project No.: 18242.100

Date: September 12, 2019

To All Plan Holders:

The following changes, additions, and/or deletions are hereby made a part of the Construction Documents for the above noted project, fully and completely as if the same were fully contained therein. All other terms, conditions, and specifications of the original Invitation to Bid remain unchanged.
This amendment must be acknowledged in the space provided on the Bid Schedule.

The Submittal Date and Time is NOT changed. It remains: September 26, 2019 @ 1:00 PM

The modifications directed by this Addendum No.02 are described in this page and the following attachments:

1. Additional Instructions to Bidders (as indicated below)
2. Pre-Bid RFI Responses
3. Revised Drawings (as indicated below)
4. Revised Specification Sections (as indicated below)

CHANGES TO BID Documents
As follows:

Drawings:

G001 **Sheet names in List of Drawings revised to match sheets.**

A111 **Existing room names added to the corridor that is to the north of the project area, scope revised to indicate partial demolition of the ceiling in this corridor.**

General Note added to sheet regarding accommodations for equipment or material deliveries and trash removal from the project area.

A121 **Removed "NOT IN CONTRACT" from room identification tags in rooms that require partial ceiling demolition.**

A122 **Keynote FP06 revised to indicate new gypsum board at existing framing.**

General Note regarding Owner Furnished Items added to General Notes.

NOT FOR BID

A123 Keynote FP06 revised to indicate new gypsum board at existing framing.

A131 General Note added to sheet regarding patching back of existing ceilings in corridor.

General Note regarding Owner Furnished Items added to General Notes.

A201 Clinical Assistant 018 Interior Elevation E added to sheet at N2/-.

Cabinet locks added to various elevations and Keynote EL30 added to Keynotes.

General Note prohibiting cabinet locks at accessible sink aprons added to General Notes.

Detail callout revised to reference correct detail.

A202 Physician's Office 037A, B, C Interior Elevations A & B added to sheet at N2/-.

Cabinet locks added to various elevations and Keynote EL30 added to Keynotes.

General Note prohibiting cabinet locks at accessible sink aprons added to General Notes.

Elevation E6 revised to show padlock hasp at plastic laminate lockers.

Elevation J1 revised to match floor plan.

Various detail callouts revised to reference correct detail.

Elevation E2/- added to sheet.

A203 Cabinet locks added to various elevations and Keynote EL30 added to Keynotes.

General Notes prohibiting cabinet locks at accessible sink aprons added to General Notes.

Various detail callouts revised to reference correct detail.

A204 Cabinet locks added to elevation A12/- and Keynote EL30 added to Keynotes.

General Note prohibiting cabinet locks at accessible sink aprons added to General Notes.

A605 Revised detail number.

M111 Revised demolition scope in the existing public restrooms.

M122 Revised ductwork.

M125 Added note to sheet regarding patching exterior finishes.

Added General Note #4 referencing framing details.

NOT FOR BID

ID300 **Added Note to plan regarding Window Treatments.**

ID600 **Typical Toilet Room Interior Elevations revised to match Architectural drawings.**

Detail 11/- omitted from drawings.

Reception and Nurse Station Elevations and Details revised to match Architectural.

ID700 **Revised Finish Schedule.**

Specifications:

TOC **Various typos corrected in Table of Contents**

016500 **Specification section revised to remove language referencing "Equipment Drawings, Schedules or Specifications"**

064100 **Specification sub-section 2.3 G 6 & 7 revised to omit Keyboard Trays and Articulating Keyboard Supports.**

090000 **Specification sub-section 1.2 B revised to indicate sink per plumbing drawings.**

Specification sub-section 1.11 B revised to include Window Treatment specifications.

Specification sub-section 1.11 D revised to omit Metal Lockers.

Additional Instructions to Bidders:

1. The contractor will not be allowed to use the MOB elevators for equipment or material deliveries to, or for trash removal from, the project. For these items, the contractor will be allowed to remove and replace one, or two, exterior windows. The location(s) will be coordinated and approved by the Construction Manager and ARMC Facilities. Contractor shall use all due care and caution in doing the work. When the window is re-installed there shall be no difference in construction detail or appearance from the original condition. During construction, the openings shall be weather protected to prevent moisture intrusion.
2. The contractor is to assume that the laydown area for equipment deliveries and storage will be located in close proximity to the ARMC hospital loading dock. The actual location will be coordinated with the Construction Manager and ARMC Facilities. Because of space constraints, the laydown area will be restricted. Exact size/area will be determined by the Construction Manager and ARMC Facilities at the time of construction.
3. Project workers will be allowed to access the work area through the stair at the northwest corner of the 1st Floor Lobby. Access will be coordinated with ARMC Facilities and Security.
4. Workers will be allowed to park in Lot 14, at the north end of the ARMC site.
5. All workers will be required to provide proof that they have received flu shots within 12 weeks.
6. All workers will be required to check in each day at the Materials Management office for badging. Badges are to be turned back in at the end of the day.
7. Any and all clouds shown on the plumbing drawings and clouds without Delta Symbol A on the mechanical drawings are not related to this Addendum and should be disregarded.

END OF ADDENDUM NO. 02

NOT FOR BID

Arrowhead Regional Medical Center
Oncology-Ambulatory Clinic
Pre-Bid RFIs (Addendum 2)
Thursday, September 12, 2019

Savely Healthcare Architects

No.	Question	Response
001.1	On sheet E123 in the Exam Rooms there are two nurse call devices shown, a staff station and a duty station. In an acute care hospital, these types of stations are not required in an exam room (2016 CBC - Table 1224.4.6.5). There is no requirement for a duty station and staff station in a clinic exam room. However, there may be a need for a staff assist button, which is typically used in clinic exam and procedure rooms.	The Nurse Call system is a Defered Approval Item per sheet G001 (see attached) and General Note 21 on E000 and has not yet been designed. All Nurse Call devices shown on the electrical drawings are for "Information Only" for the purpose of providing accurate bids from general contractors. Exact system requirements, locations and number of devices shall be designed under a separate contract by the owners selected vendor.
002.1	Will use of Reptrack system be required for this project ?	No.
002.2	Does the facility have a preferred fire alarm vendor?	Johnson Controls is the service contractor on the site, but not required.
002.3	Will the facility provide secured storage for equipment and materials during the project?	No, each contractor will be responsible for their own secure storage. The location of that storage will be coordinated with ARMC and Kitchell.
002.4	Sheet G001 shows clouding of sheets M601, M602, M603, M604 however no changes are shown on these sheets? Please advise.	The names of the clouded sheets were revised as they appear in the list only. No revisions were made the actual sheets.
002.5	Sheet A111 DM15 shows removal of ceiling in restrooms 207 & 208. Sheet M122 shows these areas as "not in contract". Please confirm these areas are in the scope of work.	Keynote DM15 indicates to DEMOLISH EXISTING CEILING AS REQUIRED BY NEW MECHANICAL WORK ONLY. Coordinate with scope shown on Mechanical drawings. M122 should **NOT** indicate "NOT IN SCOPE". See revised Mechanical sheets attached.
002.6	Sheet M112 shows new CFSD's crossing corridor 202 into another space not shown on the plans. Please provide additional information about this area. Additionally M122 shows this area as "not in contract" Please confirm this area is in the scope of work.	Corridor M122 is in contract, see attached revised Mechanical sheets and Architectural Demolition Plan. The ducts that cross corridor 202 are open to the existing return air plenum. The area above OSHPD spaces are not allowed to convey return air per mechanical code. This provides a way to get return air from the rest of the floor back to the main return air shaft that stubs out above the suite.
003.1	Section 064100/2.3.G.13.a, indicates cabinet locks as indicated on drawings. Interior elevations and casework details do not show locks. Please clarify the locations of any casework locks.	Cabinet locks are to be provided per the attached revised interior elevations.
003.2	Section 064100/2.3.G.6 & 7, indicate keyboard trays and articulating keyboard supports. Interior elevations and casework details do not show keyboard trays or supports. Please clarify locations of keyboard trays and supports.	Keyboard trays and supports are not part of this contract, and have been removed from Specification Section 064100. See revised Specification Section attached.
003.3	Interior elevations A3, E7 & J7/A204 show wall hung sinks at Patient and Staff Toilet Rooms. Elevations 2 & 3/ID600 & Finish Schedule on ID700 show solid surface countertop with undermount sink at these locations. Please clarify if these sinks are wall or counter mounted.	The sinks shown on the Architectural interior elevations and referenced in this RFI are to be wall hung per the architectural drawings. The Interior Design drawings have been revised, see attached revised ID drawings.
003.4	Section 09 00 00/1.2.B indicates solid surface integral sinks, but Plumbing Schedule on P001 indicates sinks are stainless steel. Please clarify.	Specification Section 090000 is incorrect. The sinks referenced in this RFI shall be Stainless Steel per Plumbing drawings. See revised Specification Section and Interior Design drawings attached.
004.1	Elevation E6/A202 shows plastic laminate lockers per Keynote EL02 and Section 105060, but section 090000 Finish Material Legend identifies the lockers as LKR-1 Metal Lockers. Please clarify.	The lockers are to be Plastic Laminate, Metal Lockers have been removed from Specification Section 090000. Please use Specification Section 105060 per architectural drawings. See revised Specification Sections.
005.1	Please advise who is responsible for Window Treatment. Specification section 09 00 00 calls for Window Treatment SHD-1 to match building standards, but there are no call outs on the drawings.	Window Treatments are to be contractor furnished/contractor installed. See revised Interior Design drawings and Specification Sections attached.
006.1	I wanted to ask a question regarding the Oncology Infusion Clinic Project for Arrowhead Regional Medical Center (Project #10.10.0265). The bid documents ask for a Class "B" General Building Contractor License. Would a Class "C-7" Low Voltage Systems Contractor License be acceptable?	The County is only accepting pricing for the complete scope of work, which will require a Class B license.
007.1	Keynote DM04 on sheet A111 Demolition Plan calls to "Demolish Existing Gypsum Board On One Side Only, Protect Framing In Place" along the West, South & East perimeter walls, but keynote FP06 on sheet A122 Floor Plan - Area A calls for "Existing Gypsum Board Furring to Remain, Protect in Place. Please advise if existing gypsum board along the perimeter wall is to remain, or to be demolished and replaced with new framing and drywall.	Existing gypsum board along all perimeter walls is to be demolished. FP06 on sheets A122 and A123 has been revised to indicated existing framing with new 5/8" gypsum wall board.
008.1	Please advise if the existing roof warranty program is still in effect and who is the vendor for the existing roof.	There is no impact or Work to existing roofing.
009.1	Specifications section 01 65 00 Owner Furnished Products refer to Equipment Drawings & an Equipment Schedule, please provide.	Specification section 016500 should not reference "Equipment Drawings, Schedules or specifications". All equipment is identified on sheets A122 and A123 and is Owner Furnished/Contractor Installed. Specifications revised accordingly.

NOT FOR BID

ARROWHEAD REGIONAL MEDICAL CENTER M.O.B.
ONCOLOGY-AMBULATORY CLINIC

VICINITY MAP

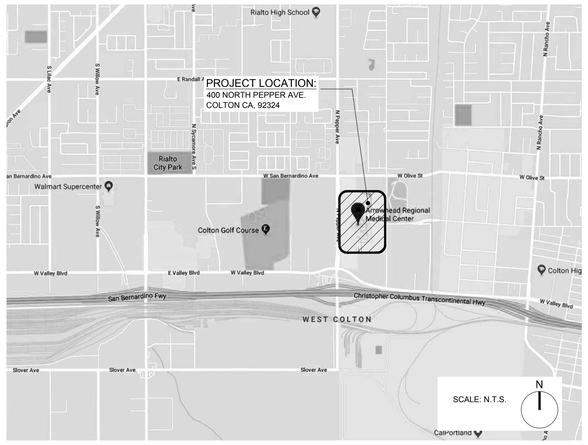

SYMBOLS

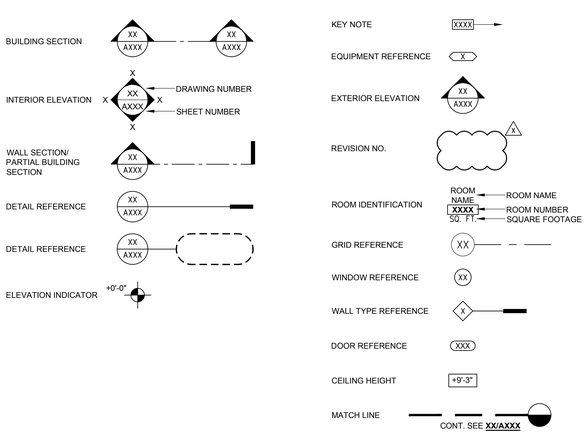

NOTE:
SYMBOLS LEGEND IS FOR REFERENCE ONLY, NOT ALL SYMBOLS THAT APPEAR IN THE LEGEND ARE PRESENT IN THE PROJECT

ABBREVIATIONS

A.B.	ANCHOR BOLT	FT.	FOOT, FEET		
A.C.	ASPHALT CONCRETE	FURN.	FURNITURE	REV.	REVISION
ADJ.	ADJUSTABLE	FXTR.	FIXTURE	RM.	ROOM
A.F.F.	ABOVE FINISH FLOOR	GA.	GAUGE	R.O.	ROUGH OPENING
A.F.G.	ABOVE FINISH GRADE	GALV.	GALVANIZED	S.C.	SOLID CORE
A.F.S.	ABOVE FINISH SLAB	G.C.	GENERAL CONTRACTOR	SCHED.	SCHEDULE
A.H.J.	AUTHORITY HAVING JURISDICTION	GYP. BD.	GYPSUM BOARD	S.J.	SEISMIC JOINT
ALT.	ALTERNATE	H.C.	HOLLOW CORE	SHR.	SHOWER
APPROX.	APPROXIMATELY	H.M.	HOLLOW METAL	SHT.	SHEET
BD.	BOARD	HORIZ.	HORIZONTAL	SIM.	SIMILAR
BLDG.	BUILDING	HR.	HOUR	S.M.S.	SHEET METAL SCREW
BLKG.	BLOCKING	INFO.	INFORMATION	SQ.	SQUARE
BM.	BEAM	INSUL.	INSULATION	S.S.	STAINLESS STEEL
BSMT.	BASEMENT	JAN.	JANITOR	ST.	STREET
CAB.	CABINET	LAV.	LAVATORY	STOR.	STORAGE
C.B.C.	CALIFORNIA BUILDING CODE	LB.	POUND(S)	T&B	TOP AND BOTTOM
C.C.T.V.	CLOSED CIRCUIT TELEVISION	LT . WT.	LIGHT WEIGHT	T&G	TONGUE AND GROVE
C.G.	CORNER GUARD	MAX.	MAXIMUM	T.C.	TOP OF CONCRETE
C.L.	CENTER LINE	MECH.	MECHANICAL	TEL.	TELEPHONE
CLR.	CLEAR	MIN.	MINIMUM	TEMP.	TEMPORARY
CLNG.	CEILING	(N)	NEW	THK.	THKICK
C.J.	CONTROL JOINT	N	NORTH	TOT.	TOTAL
COL.	COLUMN	NA	NOT APPLICABLE	T.O.P.	TOP OF PARAPET
CONC.	CONCRETE	N.I.C.	NOT IN CONTRACT	T.O.PL.	TOP OF PLATE
CONT.	CONTINUOUS	NO.	NUMBER	T.O.R.	TOP OF ROOF
CSWK.	CASEWORK	N.T.S.	NOT TO SCALE	U.C.	UNDER COUNTER
DIA. (Ø)	DIAMETER	O.C.	ON CENTER	U.N.O.	UNLESS NOTED OTHERWISE
DBL.	DOUBLE	OXY.	OXYGEN	UTIL.	UTILITY
DEMO	DEMOLITION	P.C.	PORTLAND CEMENT	VERT.	VERTICAL
D.F.	DRINKING FOUNTAIN	P.D.F.	POWER DRIVEN FASTENER	VEST.	VESTIBULE
DIAG.	DIAGINAL	P.L.	PROPERTY LINE OR PLATE	V.I.F.	VERIFY IN FEILD
DIST.	DISTANCE	PLAM.	PLASTIC LAMINATE	VOL.	VOLUME
DN.	DOWN	PLYWD.	PLYWOOD	W/	WITH
DWG.	DRAWING	PNL. BD.	PANEL BOARD	W/O	WITHOUT
(E)	EXISTING	PRKG.	PARKING	W.C.	WATER CLOSET
EA.	EACH	P.S.F.	POUNDS PER SQUARE FOOT	WD.	WOOD
EL.	ELEVATION	P.S.I.	POUNDS PER SQUARE INCH	WT.	WEIGHT
ELEC.	ELECTRICAL	P.V.C.	POLYVINYL CHLORIDE		
F.A.	FIRE ALARM	PVMT.	PAVEMENT		
F.D.	FLOOR DRAIN	QTY.	QUANTITY		
F.E.C.	FIRE EXTINGUISHER CABINET	RAD.	RADIUS		
F.F.	FINISH FLOOR	R.C.P.	REFLECTED CEILING PLAN		
FIN.	FINISH	R.D.	ROOF DRAIN		
FLR.	FLOOR	REF.	REFERENCE		
F.O.C.	FACE OF CONCRETE	REFR.	REFRIGERATOR		
F.O.F.	FACE OF FINISH	REINF.	REINFORCE (D) (ING) (MENT)		
F.O.S.	FACE OF STEEL	REQD.	REQUIRED		

NOTE:
ALL TERMINOLOGY ON THE DOCUMENTS IS CONSIDERED INDUSTRY STANDARD. VERIFY ANY UNKNOWN ITEMS WITH THE ARCHITECT PRIOR TO ANY ACTION.

GENERAL NOTES

1. SCOPE OF DOCUMENTS: THESE DRAWINGS INDICATE THE GENERAL SCOPE OF THE DESIGN CONCEPT, THE DIMENSIONS OF THE BUILDING, THE MAJOR ARCHITECTURAL ELEMENTS AND THE TYPE OF STRUCTURAL, MECHANICAL AND ELECTRICAL SYSTEMS, ON THE BASIS OF THE GENERAL SCOPE INDICATED OR DESCRIBED, FURNISH ALL ITEMS REQUIRED FOR THE EXECUTION AND COMPLETION OF THE WORK.
2. THE CONTRACTOR SHALL KEEP AN UP TO DATE SET OF CONTRACT DOCUMENTS PERMIT SET, INCLUDING AMENDED DOCUMENTS, AT THE JOB SITE IN A LOCATION CONVENIENT FOR REFERENCE.
3. CONTRACTOR SHALL COORDINATE ALL NECESSARY UTILITY RELOCATIONS WITH THE APPROPRIATE UTILITY COMPANIES.
4. ALL CONSTRUCTION AND MATERIALS SHALL COMPLY WITH THE REQUIREMENTS OF THE CALIFORNIA BUILDING CODES (CBC) AND LOCAL GOVERNING CODES AND AUTHORITIES.
5. VERIFY ALL DIMENSIONS AND SITE CONDITIONS BEFORE STARTING WORK. SHOULD A DISCREPANCY APPEAR IN THE SPECIFICATIONS OR DRAWINGS, OR IN THE WORK DONE BY OTHERS FROM THE CONTRACT DOCUMENTS THAT AFFECT ANY WORK, NOTIFY THE ARCHITECT AT ONCE FOR INSTRUCTION ON HOW TO PROCEED. IF THE CONTRACTOR PROCEEDS WITH THE WORK AFFECTED WITHOUT INSTRUCTIONS FROM THE ARCHITECT CONTRACTOR SHALL MAKE GOOD ANY RESULTING DAMAGE OR DEFECT.
6. CONFINE ALL OPERATIONS ON THE SITE TO AREAS PERMITTED BY THE OWNER. PERFORM THE WORK IN ACCORDANCE WITH ALL APPLICABLE LAWS, LOCAL ORDINANCES, PERMITS AND THE CONTRACT DOCUMENTS. MAINTAIN THE JOB SITE IN A CLEAN, ORDERLY CONDITION.FREE OF DEBRIS AND LITTER. THE JOB SITE SHALL NOT BE UNREASONABLY ENCUMBERED WITH ANY MATERIAL OR EQUIPMENT. EACH SUBCONTRACTOR IMMEDIATELY UPON COMPLETION OF EACH PHASE OF HIS WORK SHALL REMOVE ALL TRASH AND DEBRIS AS A RESULT OF HIS OPERATION.
7. STACK AND PROTECT ALL MATERIAL STORED ON THE SITE TO PREVENT DAMAGE AND DETERIORATION UNTIL USE. FAILURE TO PROTECT MATERIALS MAY BE CAUSE FOR REJECTION OF WORK.
8. PERFORM ALL CUTTING, FITTING OR PATCHING THAT MAY BE REQUIRED TO MAKE SEVERAL PARTS FIT TOGETHER PROPERLY SO AS NOT TO ENDANGER ANY OTHER WORK BY CUTTING, EXCAVATING OR OTHERWISE ALTERING THE TOTAL WORK OR ANY PART OF IT. PERFORM ALL PATCHING, REPAIRING AND REPLACING OF MATERIALS AND SURFACES, CUT OR DAMAGED IN EXECUTION OF WORK WITH APPLICABLE MATERIAL SO THAT SURFACES REPLACED WILL, UPON COMPLETION, MATCH SURROUNDING SIMILAR SURFACES.
9. DO NOT COMMENCE ANY PORTION OF THE WORK REQUIRING A SHOP DRAWING OR SAMPLE SUBMISSION UNTIL THE SUBMISSION HAS BEEN REVIEWED AND ACCEPTED BY THE ARCHITECT. ALL SUCH PORTIONS OF THE WORK SHALL BE IN ACCORDANCE WITH ACCEPTED SHOP DRAWINGS AND SAMPLES.
10. DIMENSIONS:
    a) FOR ALL PROPOSED CONSTRUCTION, USE NOTED DIMENSIONS ONLY. **DO NOT SCALE DRAWINGS**.
    b) ALL DIMENSIONS ARE TO FACE OF STUD (F.O.S.) UNLESS NOTED OTHERWISE.
    c) CEILING HEIGHT DIMENSIONS ARE FROM FLOOR SLAB TO FINISH FACE OF CEILING.
11. PROVIDE ALL NECESSARY BLOCKING, BACKING, AND FRAMING FOR EQUIPMENT AND ALL OTHER ITEMS REQUIRING THE SAME.
12. COMPLY WITH FIRE RESISTIVE REQUIREMENTS THROUGHOUT THE ENTIRE BUILDING PER CBC.
13. MAINTAIN FIRE RATED CONSTRUCTION AT ALL CABINETS, ACCESSORIES, PANELS AND SIMILAR FABRICATIONS OR ASSEMBLIES RECESSED RATED PARTITIONS.
14. INITIATE, MAINTAIN AND SUPERVISE A REASONABLE AND PRUDENT SAFETY PROGRAM INCLUDING, BUT NOT LIMITED TO, THE ISOLATION OF WORK AREAS AND THE PROMPT REMOVAL OF ANY DEBRIS OR TOOLS WHICH MIGHT ENDANGER VISITORS, PATIENTS OR EMPLOYEES OF THE HOSPITAL. ALL ROADS AND WALKWAYS SHALL REMAIN CLEAR AND UNOBSTRUCTED.
15. VERIFY CLEARANCES, MOUNTING HEIGHTS AND LOCATIONS OF FIXTURES, EQUIPMENT, DEVICES AND ACCESSORIES WITH LATEST EDITION OF GOVERNING CODE. NOTIFY THE ARCHITECT IN CASE OF DISCREPANCY.
16. WHEN INSTALLING DRILLED IN ANCHORS AND/OR POWDER DRIVEN PINS IN EXISTING NON-PRESTRESSED REINFORCED CONCRETE, USE CARE AND CAUTION TO AVOID CUTTING OR DAMAGING THE EXISTING REINFORCING BARS. WHEN INSTALLING THEM INTO EXISTING PRE-STRESSED CONCRETE (PRE OR POST-TENSIONED) LOCATE THE PRESTRESSED TENDONS BY USING A NON-DESTRUCTIVE METHOD PRIOR TO INSTALLATION. EXERCISE EXTREME CARE AND CAUTION TO AVOID CUTTING OR DAMAGING THE TENDONS DURING INSTALLATION MAINTAIN A MINIMUM CLEARANCE OF ONE INCH BETWEEN THE REINFORCEMENT AND THE DRILLED IN ANCHOR AND/OR PIN. ***REFERENCE: 2016 CBC SECTION 1603A.1.10.***
17. PROVIDE ACCESS PANELS TO ALL TO ALL CONCEALED SPACES (I.E. ATTICS, VOID SPACES, ETC.) AS REQUIRED BY THE CURRENT CBC AND LOCAL GOVERNING AUTHORITIES AND AS NEEDED TO SERVICE ANT ITEMS SPECIFIED BY THESE DOCUMENTS.
18. NO DEVIATION FROM THE CONTRACT DOCUMENTS SHALL BE MADE WITHOUT WRITTEN APPROVAL FROM THE ARCHITECT.
19. CONTRACTOR SHALL COORDINATE WITH ALL EQUIPMENT MANUFACTURERS FOR EQUIPMENT ROUGH-IN REQUIREMENTS.
20. NO PRODUCTS CONTAINING ASBESTOS IN ANY FORM SHALL BE USED ON ANY PART OF THIS PROJECT.
21. PROVIDE AND MAINTAIN TEMPORARY BARRICADES, CLOSURE WALLS, ETC. AS REQUIRED TO PROTECT THE PUBLIC DURING THE PERIOD OF CONSTRUCTION. CONSTRUCTION BARRICADES TO BE EQUAL TO THE FIRE RATING OF THE WALL(S) THEY REPLACE.
22. ARCHITECT IS NOT RESPONSIBLE FOR THE ACCURACY OF THE INFORMATION CONTAINED IN OWNER SUPPLIED DOCUMENTS. CONTRACTOR TO VERIFY ALL DIMENSIONS IN THE FIELD PRIOR TO PERFORMANCE OF WORK.
23. PREPARE ALL FLOORS TO RECEIVE NEW FLOOR FINISHES INDICATED. VOIDS SHALL BE FILLED AND ANY SURFACE IRREGULARITIES LEVELED. ALL FLOOR SURFACES ARE TO BE LEVEL, CLEAN AND IN SMOOTH CONDITION MEETING THE MANUFACTURERS SPECIFICATIONS PRIOR TO THE INSTALLATION OF ANY FLOOR COVERINGS.
24. ALL FLOORS SHALL BE OF SLIP RESISTANT FINISH SURFACE. STATIC COEFFICIENT OF FRICTION SHALL BE 0.6 FOR WALKING SURFACES AND 0.8 FOR RAMPS. FLOORING SHALL BE LABELED WITH STATIC COEFFICIENT OF FRICTION.
25. UNLESS OTHERWISE INDICATED, CLOSETS, VESTIBULES, COLUMNS, PARTITIONED-OFF PORTIONS, PROJECTIONS OR RECESSES IN SPACES SHALL HAVE FINISHES TO MATCH THE EXISTING CONDITION FOR RESPECTIVE SPACES IN WHICH THEY OCCUR.
26. THE MECHANICAL, ELECTRICAL AND PLUMBING DRAWINGS ARE SUPPLEMENTARY TO THE ARCHITECTURAL DRAWINGS. SHOULD THERE BE A DISCREPANCY BETWEEN THE ARCHITECTURAL DRAWINGS AND THE CONSULTING ENGINEERS' DRAWINGS, SUCH A DISCREPANCY IS TO BE BROUGHT TO THE ATTENTION OF THE ARCHITECT PRIOR TO HE INSTALLATION OF SAID WORK. ANY WORK INSTALLED IN CONFLICT WITH THE ARCHITECTURAL DRAWINGS SHALL BE CORRECTED BY THE CONTRACTOR AT THEIR OWN EXPENSE
27. CONTRACTOR IS TO MAKE EXACT DETERMINATION AS TO THE LOCATION OF ALL EXISTING UTILITIES. DO NOT BEGIN WORK UNTIL THIS DETERMINATION HAS BEEN MADE. CONTRACTOR IS FULLY RESPONSIBLE FOR DAMAGE CAUSED BY FAILURE TO LOCATE AND PRESERVE UTILITIES.
28. PROVIDE GALVANIC ISOLATION BETWEEN DISSIMILAR METALS.
29. CONTINUE GYPSUM BOARD OR PLASTER BEHIND ALL OPENINGS INCLUDING WALL CABINETS, RECESSED FIRE HOSE CABINETS AND ELECTRICAL PANELS AT FIRE/SMOKE RATED WALLS.
30. ALL PENETRATIONS THOUGH FIRE RATED WALLS AND SHAFTS SHALL BE EQUIPPED WITH DAMPERS, SEALANTS OR OTHER APPROPRIATE AND APPROVED MATERIALS AND METHODS SO AS TO MAINTAIN THAT RATING.
31. FINISHES:
    a) ALL FLOOR FINISHES SHALL BE CLASS 1 PER NFPA 253. FLAME SPREAD FOR ALL WALL AND CEILING FINISHES SHALL NOT EXCEED 25.
    b) ANY DECORATIONS USED SHALL BE NON COMBUSTIBLE OR FLAME PROOFED IN AN APPROVED MANNER.
    c) ALL FINISH MATERIALS SHALL COMPLY WITH REQUIREMENTS OF CBC CHAPTER 7.
       F.S. 0-25 CLASS A SMOKE-DEVELOPED 0-450
       F.S. 26-75 CLASS B SMOKE-DEVELOPED 0-450
       F.S. 76-200 CLASS C SMOKE-DEVELOPED 0-450
    d) ALL EXTERIOR AND INTERIOR WALL INSULATION SHALL BE NON COMBUSTIBLE.
32. FIRE EXTINGUISHERS SHALL BE PROVIDED AS REQUIRED BY THE FIRE MARSHAL. TRAVEL DISTANCE SHALL NOT BE MORE THAN 75' TO ANY FIRE EXTINGUISHER LOCATION. (MIN. RATING 2A:10B:C-CURRENT SF SERVICE TAG) MOUNTED MAXIMUM 54" ABOVE FINISH FLOOR.
33. **HAZARDOUS MATERIALS**: SAVELY HEALTHCARE ARCHITECTS ASSUMES NO RESPONSIBILITY RELATING TO ANY TOXIC MATERIALS, INCLUDING ASBESTOS, AND ASSUMES NO RESPONSIBILITY RELATING TO ITS EXISTENCE OR REMOVAL. THE OWNER WILL TAKE ACTION WITH A CONSULTANT OR SPECIALIST, LICENSED BY THE STATE OF CALIFORNIA, SHOULD ANY HAZARDOUS MATERIALS RELATED SERVICE BE REQUIRED ON THE PROJECT.

PROJECT LOCATION

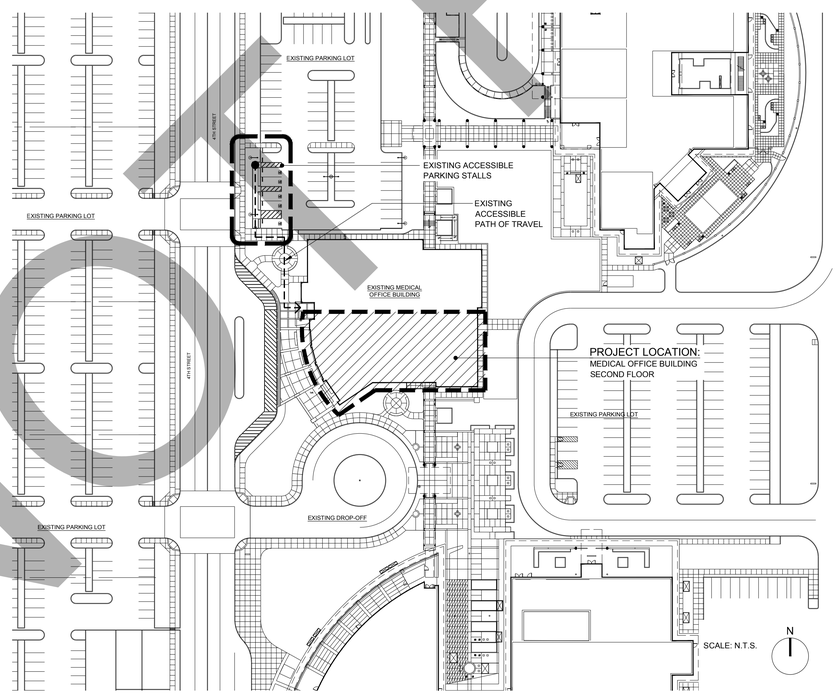

PROJECT TEAM

ARCHITECT:
SAVELY HEALTHCARE ARCHITECTS
18008 SKY PARK CIRCLE, SUITE 290
IRVINE, CA 92614
(949) 599-6737
GUY LE, PROJECT MANAGER

STRUCTURAL:
SPIRE STRUCTURAL ENGINEERING INC.
26461 RANCHO PARKWAY SOUTH
LAKE FOREST, CA 92630
(949) 916-3440
ALEX BLETSOS, PRINCIPAL

MECHANICAL/PLUMBING:
GOSS ENGINEERING
255 E. RINCON STREET, SUITE 301
CORONA, CA 92879
(951) 340- 1977
BRIAN FOGLE, SENIOR PROJECT MANAGER

ELECTRICAL:
FBA ENGINEERING
150 PAULARINO AVENUE, SUITE A120
COSTA MESA, CA 92626
(949) 852-9995
JIM PROCTOR

INTERIOR DESIGN:
MONTANIO DESIGN GROUP
6672 SANTA SUSANA PASS ROAD
SIMI VALLEY, CA 93063
(805) 522-5662
SYLVIA MONTANIO

PROJECT SCOPE

PROJECT SCOPE:

CONVERT OFFICE SPACE LOCATED ON THE 2ND FLOOR OF THE ARROWHEAD REGIONAL MEDICAL CENTER MEDICAL OFFICE BUILDING INTO THE AMBULATORY CLINIC FOR ONCOLOGY/INFUSION SERVICES.

PROJECT LOCATION: **MEDICAL OFFICE BUILDING, SECOND FLOOR**

PROJECT SQUARE FOOTAGE: **9,320 SQ. FT.**

PROJECT DATA

BUILDING ADDRESS:	400 NORTH PEPPER AVENUE COLTON, CALIFORNIA 92324
BUILDING OWNER:	ARROWHEAD REGIONAL MEDICAL CENTER
BUILDING USE:	MEDICAL OFFICE BUILDING
OCCUPANCY TYPE:	B - OFFICE BUILDING (SECOND FLOOR)
CONSTRUCTION TYPE:	II-A
AUTOMATIC SPRINKLERS:	PROVIDED THROUGHOUT
STORIES:	3 STORIES (WITH PENTHOUSE)

APPLICABLE CODES

2016 California Administrative Code (CAC)
Part 1, Title 24, California Code of Regulations (CCR)

2016 California Building Code (CBC) Part 2, Title 24, CCR
Based on the 2015 International Building Code (IBC)

2016 California Electrical Code (CEC) Part 3, Title 24, CCR
Based on the 2014 National Electrical Code (NEC)

2016 California Mechanical Code (CMC) Part 4, Title 24, CCR
Based on the 2015 Uniform Mechanical Code (UMC)

2016 California Plumbing Code (CPC) Part 5, Title 24, CCR
Based on the 2015 Uniform Plumbing Code (UPC)

2016 California Fire Code (CFC) Part 9, Title 24, CCR
Based on the 2015 International Fire Code (IFC)

NFPA 101, 2018 Edition, Fire Life Safety

2016 Green Building Code - Exempt for OSHPD 3 Clinics

2016 California Energy Code, Part 6

DEFERRED APPROVAL ITEMS

INSTALLATION OF:

1. FIRE ALARM
2. FIRE SPRINKLER
3. EQUIPMENT ANCHORAGE: EXHAUST FAN

SHALL NOT BE STARTED UNTIL DETAILED PLANS AND SPECIFICATIONS HAVE BEEN APPROVED BY THE AUTHORITY HAVING JURISDICTION.

THE DRAWINGS AND SPECIFICATIONS OF THE DEFERRED APPROVAL ITEMS MUST BE SUBMITTED TO THE ARCHITECT OR STRUCTURAL ENGINEER OF RECORD FOR REVIEW AND APPROVAL WITH STAMP AND SIGNATURE BEFORE SUBMITTAL TO THE AUTHORITY HAVING JURISDICTION.

CONSTRUCTION OF DEFERRED APPROVAL ITEMS BEFORE DRAWINGS AND SPECIFICATIONS HAVE BEEN APPROVED BY THE AUTHORITY HAVING JURISDICTION IS DEEMED NON-CONFORMING AND COULD RESULT IN WITHHOLDING OF APPROVAL OF THE ENTIRE PROJECT.

LIST OF DRAWINGS

GENERAL
G001 TITLE SHEET
G002 TYPICAL DIAGRAMS & DETAILS

ARCHITECTURAL
A101 CODE ANALYSIS PLAN
A102 CODE ANALYSIS PLAN - PLUMBING FIXTURE COUNT
A111 DEMOLITION PLAN
A121 OVERALL FLOOR PLAN
A122 FLOOR PLAN - AREA 'A'
A123 FLOOR PLAN - AREA 'B'
A131 OVERALL SECOND FLOOR REFLECTED CEILING
A132 REFLECTED CEILING PLAN - AREA 'A'
A133 REFLECTED CEILING PLAN - AREA 'B'
A201 INTERIOR ELEVATIONS
A202 INTERIOR ELEVATIONS
A203 INTERIOR ELEVATIONS
A204 INTERIOR ELEVATIONS
A301 BUILDING SECTIONS
A302 BUILDING SECTIONS
A501 SCHEDULES
A601 DETAILS - WALL TYPES
A602 DETAILS - FRAMING
A603 DETAILS - DOORS & WINDOWS
A604 DETAILS - CEILINGS
A605 DETAILS - CASEWORK

STRUCTURAL
S001 GENERAL NOTES
S101 TYPICAL DETAILS
S301 DETAILS

MECHANICAL
M001 MECHANICAL SYMBOLS, DESIGNATION & ABBREVIATIONS
M002 MECHANICAL SCHEDULES
M003 TITLE 24 COMPLIANCE FORMS
M004 TABLE 4A
M111 MECHANICAL DEMOLITION PLAN
M121 MECHANICAL ZONING PLAN
M122 PARTIAL MECHANICAL FLOOR PLAN - AREA 'A'
M122P PARTIAL MECHANICAL PIPING FLOOR PLAN - AREA 'A'
M123 PARTIAL MECHANICAL FLOOR PLAN - AREA 'B'
M123P PARTIAL MECHANICAL PIPING FLOOR PLAN - AREA 'B'
M124 MECHANICAL THIRD FLOOR PLAN
M125 MECHANICAL ROOF PLAN
M501 MECHANICAL DETAILS
M502 MECHANICAL DETAILS
M503 MECHANICAL DETAILS
M601 MECHANICAL CONTROLS
M602 MECHANICAL CONTROLS
M603 MECHANICAL CONTROLS
M604 SEQUENCE OF OPERATIONS

PLUMBING
P001 LEGEND, NOTES, ABBREVIATIONS & PLUMBING SCHEDULE
P111 PLUMBING DEMOLITION PLAN
P122 PARTIAL PLUMBING FLOOR PLAN - AREA 'A'
P123 PARTIAL PLUMBING FLOOR PLAN - AREA 'B'
P124 PLUMBING THIRD FLOOR PLAN
P201 HOT AND COLD WATER RISER DIAGRAM
P202 SANITARY AND VENT RISER DIAGRAM
P501 PLUMBING DETAILS

ELECTRICAL
E000 GENERAL NOTES, SYMBOLS LIST & FIXTURE SCHEDULE
E001 SINGLE LINE DIAGRAM
E002 PANEL SCHEDULES
E003 DETAILS
E004 LIGHTING CONTROL DIAGRAMS
E005 BUILDING ENERGY ANALYSIS REPORT (TITLE 24)
E111 ELECTRICAL DEMOLITION PLAN
E121 SECOND FLOOR OVERALL ELECTRICAL PLAN
E122 PARTIAL SECOND FLOOR POWER & SIGNAL PLAN AREA 'A'
E123 PARTIAL SECOND FLOOR POWER & SIGNAL PLAN AREA 'B'
E132 PARTIAL SECOND FLOOR LIGHTING PLAN AREA 'A'
E133 PARTIAL SECOND FLOOR LIGHTING PLAN AREA 'B'
E134 EMERGENCY EGRESS PHOTOMETRIC PLAN

INTERIOR DESIGN
ID300 FLOOR PATTERN PLAN & ACCENT WALL FINISH PLAN
ID600 INTERIOR ELEVATIONS & DETAILS
ID601 INTERIOR DETAILS
ID700 INTERIOR ROOM FINISH SCHEDULE

NOT FOR BID

SHA

ARCHITECT

Savely Healthcare Architects
ARCHITECTURE + PLANNING + DESIGN

18008 Sky Park Circle, Suite 290
Irvine, CA 92614
(949) 431-0071

PROJECT

ARROWHEAD REGIONAL MEDICAL CENTER
MEDICAL OFFICE BUILDING
400 N. PEPPER AVE.
COLTON, CALIFORNIA 92324

ONCOLOGY-AMBULATORY CLINIC

NO.	DATE	REVISIONS
1	09.12.2019	ADDENDUM 1

PROFESSIONAL SEALS

LICENSED ARCHITECT
RICK SAVELY
C-19830
EXP. 09-30-20
STATE OF CALIFORNIA

AGENCY APPROVAL

DRAWN BY	CHECKED BY	DATE
EED	GL	02.22.2019

PROJECT NUMBER
SHA # 18242.100

SHEET TITLE
TITLE SHEET

SHEET NUMBER
G001

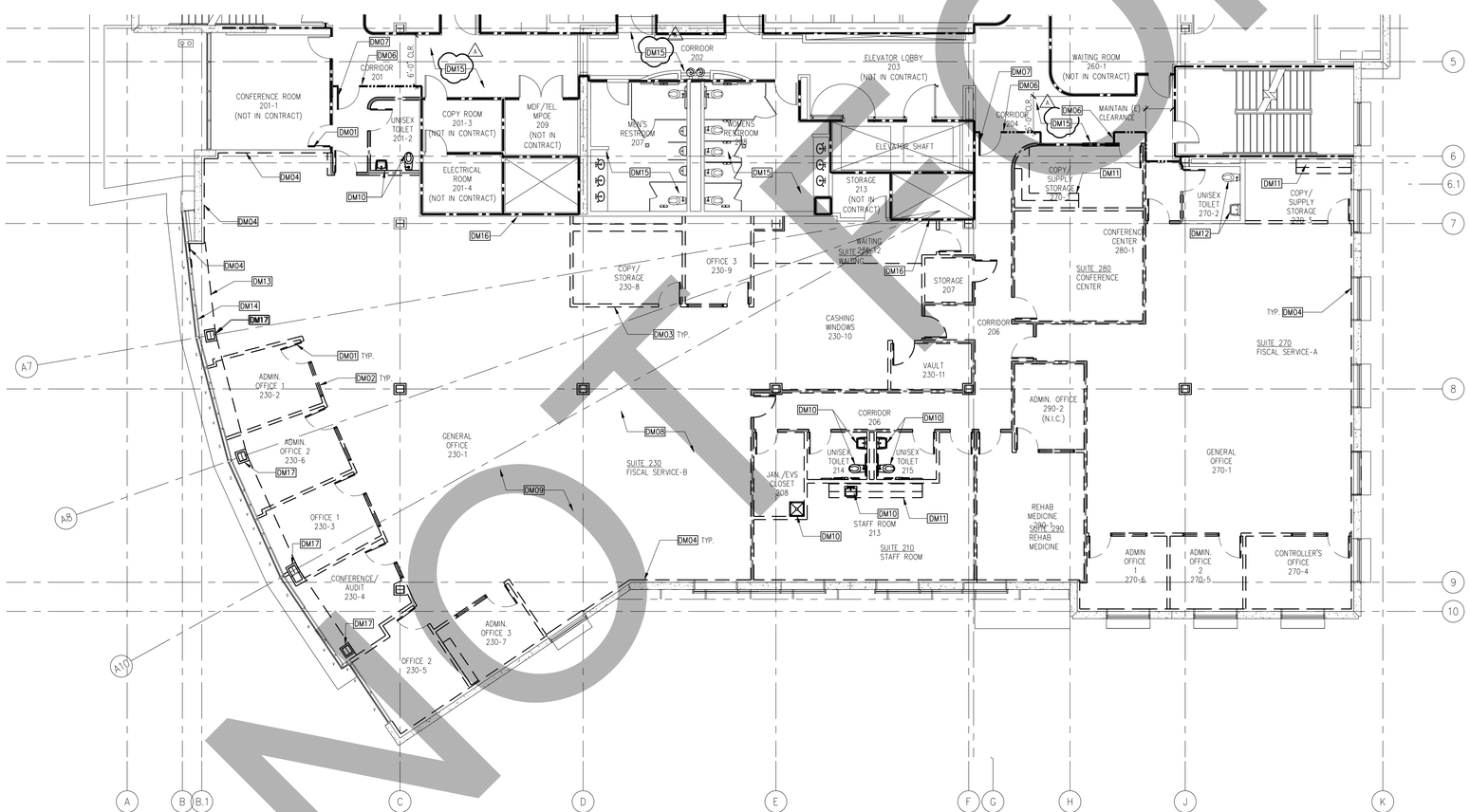

A3 SECOND FLOOR DEMOLITION PLAN

SCALE: 1/8"=1'-0"

N

GENERAL NOTES

1. DRAWINGS OF EXISTING CONDITIONS HAVE BEEN COMPILED FROM EXISTING DATA SUPPLIED TO THE ARCHITECT BY THE OWNER. THE ARCHITECT MAKES NO WARRANTY, EITHER EXPRESSED OR IMPLIED, FOR THE ACCURACY OR COMPLETENESS OF THE EXISTING INFORMATION RECORDED. FIELD VERIFY ALL EXISTING CONDITIONS. NOTIFY THE ARCHITECT IMMEDIATELY OF ANY DISCREPANCIES.
2. VERIFY LOCATIONS OF EXISTING ELECTRICAL, PLUMBING, AND MECHANICAL UTILITIES. LOCATE AND PROTECT UTILITIES TO REMAIN. DISCONNECT, REMOVE AND CAP DESIGNATED UTILITIES WITHIN THE DEMOLITION AREA. REFER TO THE ELECTRICAL DEMOLITION DRAWINGS FOR ADDITIONAL INFORMATION.
3. PROVIDE REROUTING OF UTILITIES SERVING ADJACENT AREAS TO MAINTAIN UNINTERRUPTED SERVICE.
4. REMOVAL AND DISPOSAL OF DEMOLITION DEBRIS IS THE RESPONSIBILITY OF THE CONTRACTOR. VERIFY THE HAULING ROUTE THROUGH THE BUILDING, THE DEMOLITION STAGING AREA, AND THE LOCATION OF THE DUMPSTERS WITH THE FACILITY REPRESENTATIVE PRIOR TO THE START OF DEMOLITION.
5. THE FACILITY RESERVES THE RIGHT TO SALVAGE ANY DEMOLISHED ITEM. VERIFY ITEMS TO BE SALVAGED WITH THE FACILITY REPRESENTATIVE PRIOR TO THE START OF DEMOLITION. REMOVE, PROTECT, AND TURN OVER SUCH ITEMS BY DIRECTED BY THE FACILITY.
6. TEMPORARY FIRE BARRIERS PROTECT ADJACENT SPACES FROM DAMAGE DURING THE PROGRESS OF THE WORK. PROVIDE TEMPORARY FIRE RATED PARTITIONS AS REQUIRED BY THE AUTHORITY HAVING JURISDICTION TO ENSURE PUBLIC SAFETY AND TO ALLOW BUILDING OCCUPANCY.
7. PROVIDE DUST BARRIERS AROUND ALL OPENINGS TO AND FROM THE CONSTRUCTION AREA PER THE OWNER'S INFECTION PREVENTION POLICY. PROVIDE ALL MEANS NECESSARY TO INHIBIT DUST FROM ENTERING OTHER PORTION OF THE FACILITY.
8. SURVEY EXISTING FLOORS AND CLEARLY IDENTIFY LOCATIONS OF ALL BEAMS AND JOISTS.
9. THE USE OF VISQUEEN OR SIMILAR TYPE OF MATERIAL AS A TEMPORARY CONSTRUCTION BARRIER WHERE A FIRE SEPARATION IS REQUIRED, SHALL NOT BE PERMITTED. A TEMPORARY BARRIER SHALL MEET THE SAME FIRE RATING AS WOULD THE PERMANENT PARTITION.
10. CONTRACTOR SHALL REMOVE AND REPLACE ONE, OR TWO, EXTERIOR WINDOWS FOR EQUIPMENT OR MATERIAL DELIVERIES TO, OR FOR TRASH REMOVAL FROM, THE PROJECT. THE LOCATION(S) WILL BE COORDINATED AND APPROVED BY THE CONSTRUCTION MANAGER AND ARMC FACILITIES. CONTRACTOR SHALL USE ALL DUE CARE AND CAUTION IN DOING THE WORK. WHEN THE WINDOW(S) ARE RE-INSTALLED THERE SHALL BE NO DIFFERENCE IN CONSTRUCTION DETAIL OR APPEARANCE FROM THE ORIGINAL CONDITION. DURING CONSTRUCTION, THE OPENINGS SHALL BE WEATHER PROTECTED TO PREVENT MOISTURE INTRUSION. 1

KEYNOTES

DM01	DEMOLISH EXISTING DOOR AND FRAME COMPLETE
DM02	DEMOLISH EXISTING GLAZING AND FRAME COMPLETE
DM03	DEMOLISH EXISTING GYPSUM BOARD PARTITION COMPLETE
DM04	DEMOLISH EXISTING GYPSUM BOARD ON ONE SIDE ONLY, PROTECT FRAMING IN PLACE
DM05	DEMOLISH PORTION OF EXISTING GYPSUM BOARD PARTITION ONLY AS REQUIRED BY NEW CONSTRUCTION
DM06	TEMPORARY CONSTRUCTION BARRIER, FINISH AND PAINT CORRIDOR SIDE OF BARRIER, PROTECT EXISTING FINISHES IN PLACE
DM07	TEMPORARY FIRE DOOR WITH STEEL FRAME & CLOSER, DOOR OPENS IN
DM08	DEMOLISH EXISTING FLOORING FINISH COMPLETE, THROUGHOUT THE ENTIRE SUITE
DM09	DEMOLISH EXISTING CEILING SYSTEM COMPLETE, THROUGHOUT THE ENTIRE SUITE.
DM10	DEMOLISH EXISTING PLUMBING FIXTURE COMPLETE
DM11	DEMOLISH EXISTING UPPER AND LOWER CASEWORK COMPLETE
DM12	EXISTING PLUMBING FIXTURE TO REMAIN, PROTECT IN PLACE
DM13	DEMOLISH EXISTING GYPSUM BOARD SOFFIT (ABOVE) COMPLETE
DM14	PROTECT EXISTING GYPSUM BOARD ALONG THE INSIDE OF CURTAIN IN PLACE, DEMOLISH ONLY AS REQUIRED BY NEW CONSTRUCTION
DM15	DEMO CEILING AS REQUIRED FOR MECHANICAL WORK REFER TO MECHANICAL TO DETERMINE EXTENT OF DEMOLITION
DM16	DEMO SHAFT WALL AS REQUIRED FOR MECHANICAL WORK REFER TO MECHANICAL TO DETERMINE EXTENT OF DEMO
DM17	DEMOLISH EXISTING GYPSUM BOARD COLUMN FURRING COMPLETE

LEGEND

- EXISTING NON RATED WALL TO REMAIN
- EXISTING CONCRETE WALL TO REMAIN
- EXISTING 1-HOUR RATED WALL TO REMAIN
- WALL TO BE DEMOLISHED
- 1-HOUR RATED WALL TO BE DEMOLISHED
- DOOR AND FRAME TO BE DEMOLISHED

KEY PLAN

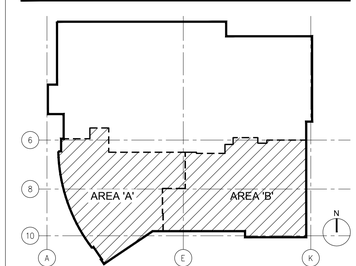

SHA

ARCHITECT

Savely Healthcare Architects
ARCHITECTURE + PLANNING + DESIGN

18008 Sky Park Circle, Suite 290
Irvine, CA 92614
(949) 431-0071

PROJECT

ARROWHEAD REGIONAL MEDICAL CENTER
MEDICAL OFFICE BUILDING
400 N. PEPPER AVE.
COLTON, CALIFORNIA 92324

ONCOLOGY-AMBULATORY CLINIC

NO.	DATE	REVISIONS
1	09.12.2019	ADDENDUM 1

PROFESSIONAL SEALS

LICENSED ARCHITECT RICK SAVELY C-19936 SEAL EXP. 09-30-19 STATE OF CALIFORNIA

AGENCY APPROVAL

DRAWN BY	CHECKED BY	DATE
EED	GL	02.22.2019

PROJECT NUMBER
SHA # 18242.100

SHEET TITLE
DEMOLITION PLAN

SHEET NUMBER
A111

NOT FOR BID

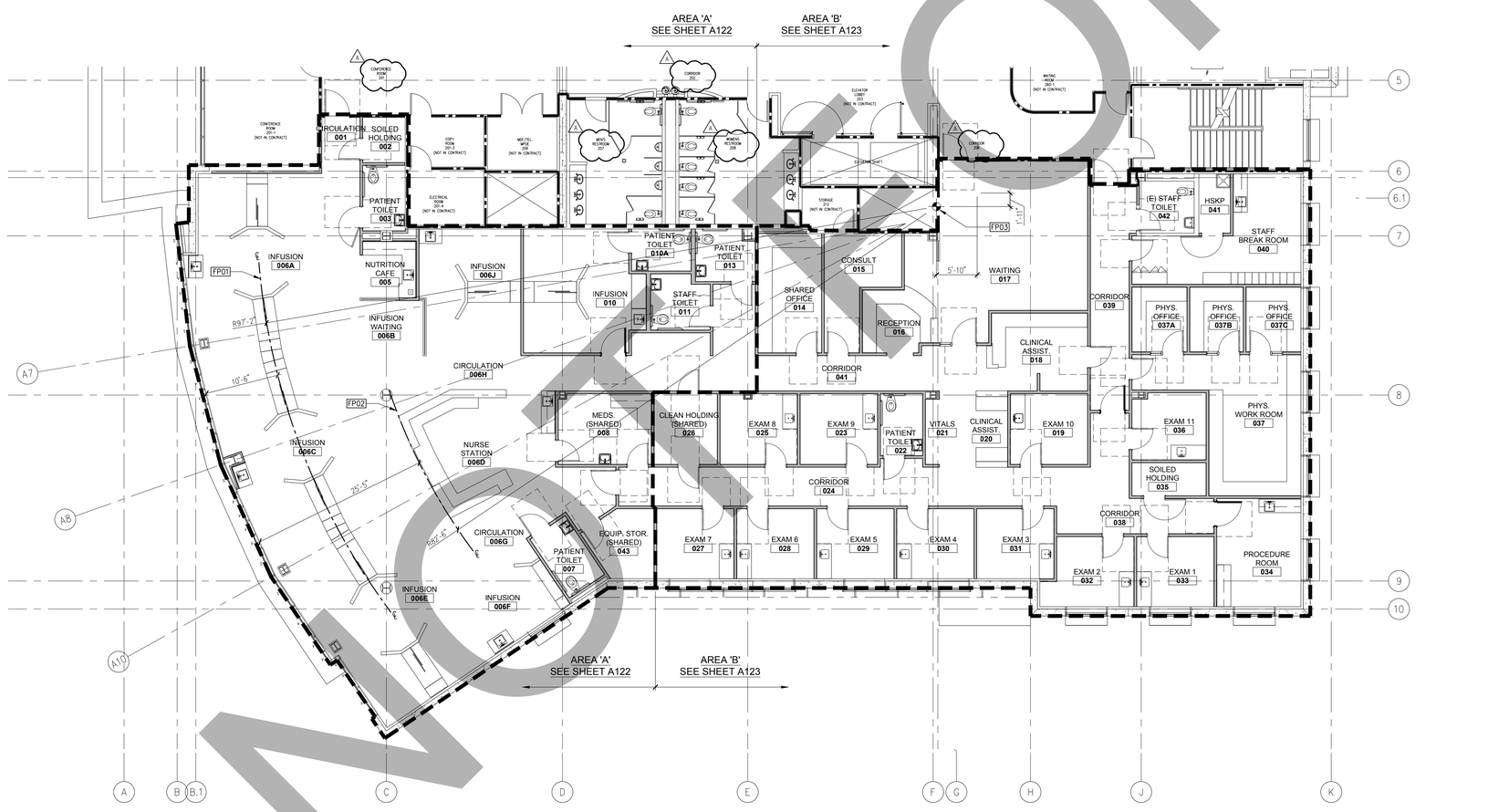

A3 OVERALL SECOND FLOOR PALN

SCALE: 1/8"=1'-0"

KEYNOTES

FP01	CENTERLINE OF INFUSION BAYS
FP02	FACE OF NURSE STATION CASEWORK
FP03	START POINT OF RADIUS

LEGEND

- EXISTING NON RATED WALL
- EXISTING CONCRETE WALL
- EXISTING 1-HOUR RATED WALL
- NON RATED WALL
- 1-HOUR RATED WALL

KEY PLAN

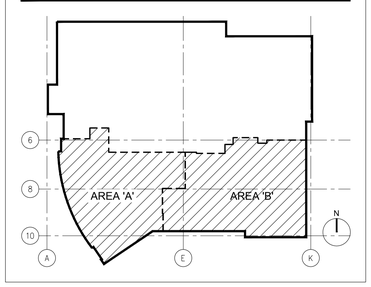

NOT FOR BID

SHA

ARCHITECT

Savely Healthcare Architects
ARCHITECTURE + PLANNING + DESIGN

18008 Sky Park Circle, Suite 290
Irvine, CA 92614
(949) 431-0071

PROJECT

ARROWHEAD REGIONAL MEDICAL CENTER

MEDICAL OFFICE BUILDING

400 N. PEPPER AVE.
COLTON, CALIFORNIA 92324

ONCOLOGY-AMBULATORY CLINIC

NO.	DATE	REVISIONS
1	09.12.2019	ADDENDUM 1

PROFESSIONAL SEALS

LICENSED ARCHITECT
RICK SAFLY
C-19038
EXP. 09-30-20
STATE OF CALIFORNIA

AGENCY APPROVAL

DRAWN BY	CHECKED BY	DATE
EED	GL	02.22.2019

PROJECT NUMBER
SHA # 18242.100

SHEET TITLE

OVERALL FLOOR PLAN

SHEET NUMBER

A121

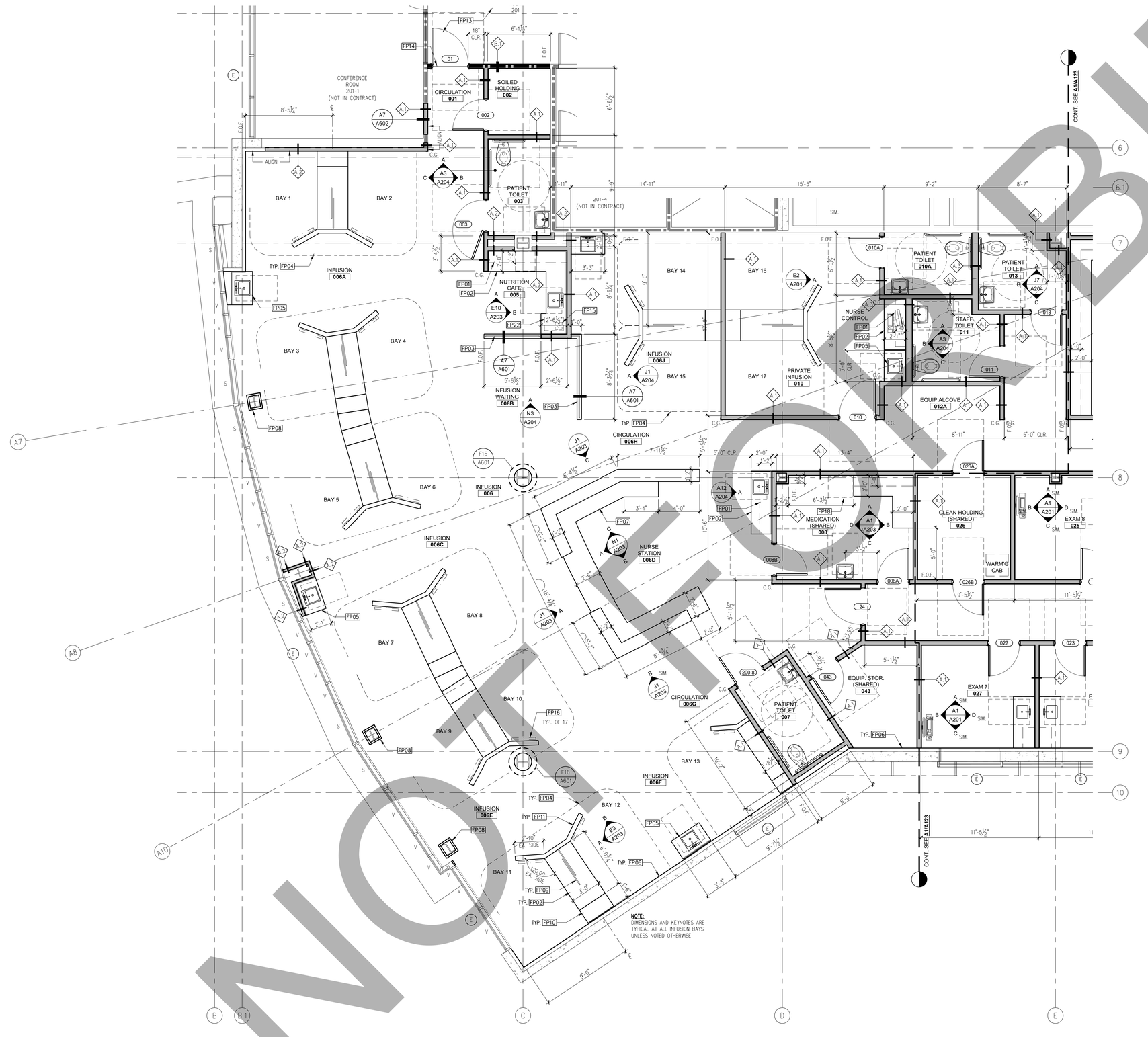

A4 PARTIAL FLOOR PLAN - AREA 'A'

SCALE: 1/4"=1'-0"

GENERAL NOTES

DIMENSIONS:
ALL DIMENSIONS ARE TO FACE OF STUD, CENTER OF STUD, COLUMN GRID LINES, OR FACE OF CONCRETE AND CMU WALLS (NOMINAL), UNLESS OTHERWISE NOTED, WINDOW AND DOOR LOCATIONS ARE DIMENSIONED TO CENTER OF ROUGH OPENING. ALL "CLR" DIMENSIONS MUST BE MAINTAINED.

DOOR LOCATION:
ALL DOORS, HINGE SIDE, SHALL BE LOCATED 5" FROM ADJACENT PERPENDICULAR WALL, U.O.N.

ALIGNMENT:
WHERE NEW PARTITIONS ARE TO ALIGN WITH EXISTING PARTITIONS, REMOVE EXISTING CORNER BEAD(S), ALIGN, TAPE, AND SPACKLE WITH NEW PARTITION.

WALL BACKING:
BLOCKING OR BACKING SHALL BE PROVIDED IN PARTITIONS AS REQUIRED FOR WALL ATTACHED ITEMS. PROVIDE 6" HIGH, 16 GA. BACKING FOR CABINETRY, SHELVING, MARKER BOARDS, CHAIR RAILS, GRAB BARS, SHOWER SEATS, HANDRAILS, FIXTURES, EQUIPMENT, FURNISHINGS AND OTHER ITEMS AS REQUIRED. ALL WOOD BLOCKING, GROUNDS, ROUGH BUCKS AND MISCELLANEOUS BLOCKING SHALL BE FIRE RETARDANT TREATED IN ACCORDANCE WITH FIRE CODES.

PENETRATIONS:
PENETRATIONS OF FIRE-RESISTIVE WALLS, FLOOR-CEILINGS, AND ROOF-CEILINGS SHALL BE PROTECTED BY AN APPROVED PENETRATION FIRESTOP SYSTEM INSTALLED AS TESTED IN ACCORDANCE WITH ASTM E 814 OR UL 1479 AND SHALL HAVE AN F RATING (AND A T RATING AT FLOORS ONLY) OF NOT LESS THAN THE REQUIRED RATING OF THE WALL OR FLOOR PENETRATED. PENETRATIONS OF ACOUSTICAL WALLS FOR PIPES, DUCTS, AND OUTLETS SHALL BE SEALED WITH AN ACOUSTICAL SEALANT.

WALL & CEILING ACCESS PANELS:
PROVIDE ACCESS PANELS AS REQUIRED PER APPLICABLE CODES FOR MAINTENANCE ACCESS TO INSTALLED MEP EQUIPMENT. PROVIDE STAINLESS STEEL AT CERAMIC TILE LOCATIONS.

FIRE PROTECTION AT COLUMNS:
EXPOSED STRUCTURAL WIDE FLANGE COLUMNS SHALL BE WRAPPED WITH 1-HOUR FIRE RATED ASSEMBLY PER UL DESIGN X526

OWNER FURNISHED ITEMS: (A)
ALL EQUIPMENT SHOWN IN THESE CONTRACT DOCUMENTS ARE OWNER FURNISHED / CONTRACTOR INSTALLED.

KEYNOTES

FP01	PLASTIC LAMINATE UPPER CABINET
FP02	PLASTIC LAMINATE BASE CABINET WITH SOLID SURFACE COUNTERTOP
FP03	DECORATIVE PLASTIC RESIN PANEL
FP04	CURTAIN TRACK ABOVE, REFER TO REFLECTED CEILING PLAN
FP05	PLASTIC LAMINATE ACCESSIBLE SINK APRON WITH SOLID SURFACE COUNTERTOP (A)
FP06	PROVIDE 5/8" TYPE 'X' GYPSUM WALL BOARD AT EXISTING FRAMING
FP07	PLASTIC LAMINATE RECEPTION COUNTER WITH SOLID SURFACE COUNTERTOP
FP08	PROVIDE NEW GYPSUM BOARD COLUMN FURRING, REFER TO GENERAL NOTES ON THIS SHEET FOR MORE INFORMATION
FP09	SLIDING PLASTIC RESIN DIVIDER PANELS
FP10	PLASTIC LAMINATE WARDROBE
FP11	LOW WALL WITH PLASTIC LAMINATE END CAP
FP12	CENTERLINE OF INFUSION BAYS
FP13	PATCH AND REPAIR EXISTING CARPET DAMAGED DURING DEMOLITION AS REQUIRED TO MATCH EXISTING
FP14	FLOORING TRANSITION
FP15	FLOOR DRAIN, REFER TO PLUMBING DRAWINGS
FP16	PATIENT TV, SEE DETAIL 3/S301
FP17	WARMING CABINET, SEE DETAIL 8/S301
FP18	REFRIGERATOR, SEE DETAIL 7/S301
FP19	ERGOTRON COMPUTER WALL BRACKET, SEE DETAIL 9/S301
FP20	LARGE SCREEN MONITOR, SEE DETAIL 4/S301
FP21	PATCH CERAMIC TILE FLOOR & WALL TO MATCH
FP22	ICE MACHINE
FP23	EXAM LIGHT OVERHEAD, SEE DETAIL 1/S301

LEGEND

- EXISTING NON RATED WALL
- EXISTING CONCRETE WALL
- EXISTING 1-HOUR RATED WALL
- NON RATED WALL
- 1-HOUR RATED WALL
- WALL REFERENCE, SEE **A601**
- EXISTING VISION GLASS/ SPANDREL PANEL
- CORNER GUARD

KEY PLAN

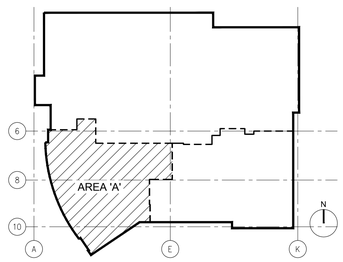

SHA

ARCHITECT

Savely Healthcare Architects
ARCHITECTURE + PLANNING + DESIGN

18008 Sky Park Circle, Suite 290
Irvine, CA 92614
(949) 431-0071

PROJECT

ARROWHEAD REGIONAL MEDICAL CENTER
MEDICAL OFFICE BUILDING
400 N. PEPPER AVE.
COLTON, CALIFORNIA 92324

ONCOLOGY-AMBULATORY CLINIC

NO.	DATE	REVISIONS
A	09.12.2019	ADDENDUM 1

PROFESSIONAL SEALS

LICENSED ARCHITECT RICK SAVELY C-19930 EXP. 09-30-20 STATE OF CALIFORNIA

AGENCY APPROVAL

DRAWN BY	CHECKED BY	DATE
EED	GL	02.22.2019

PROJECT NUMBER
SHA # 18242.100

SHEET TITLE
FLOOR PLAN - AREA 'A'

SHEET NUMBER
A122

NOT FOR BID

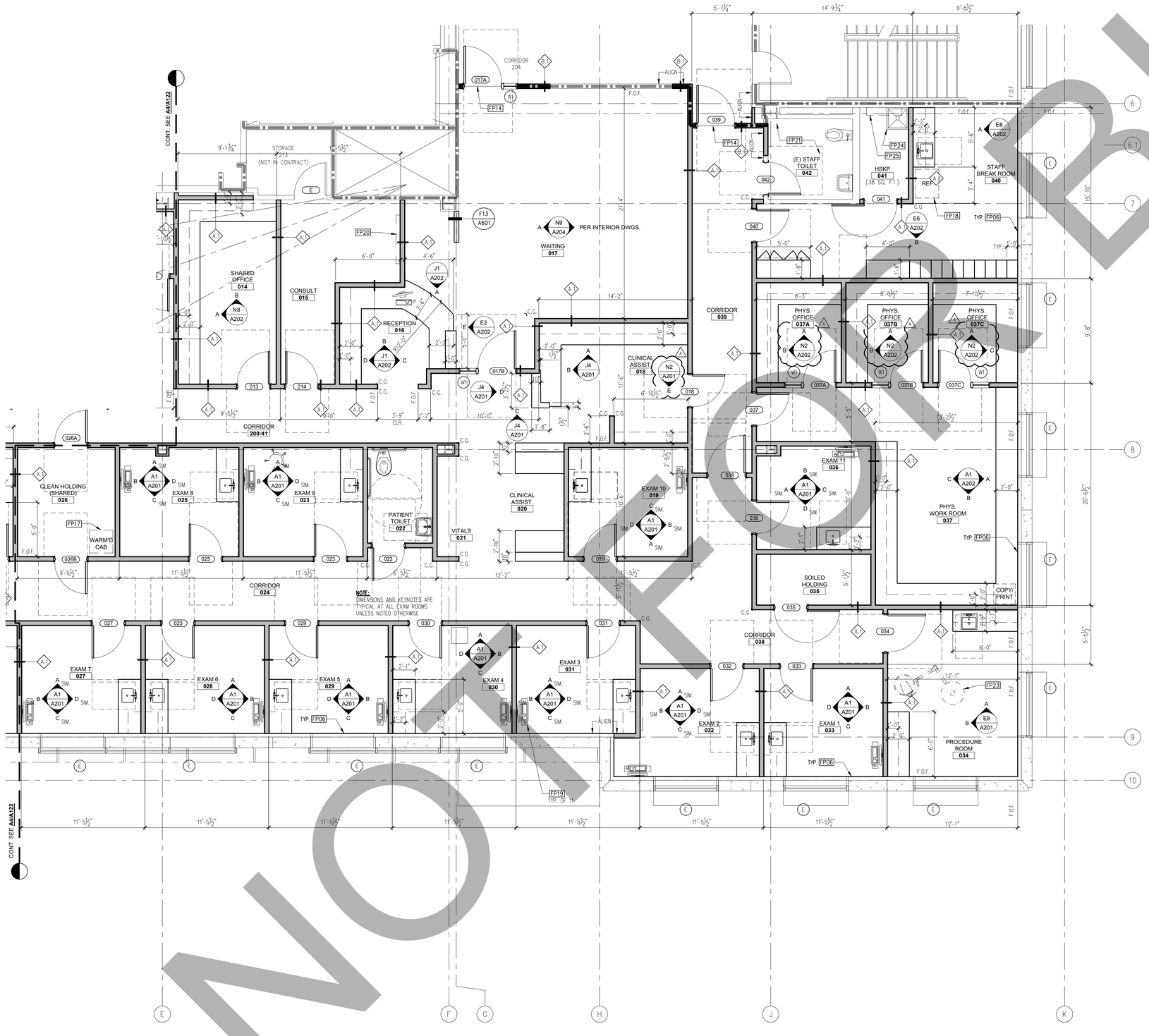

A1 DEMOLITION REFLECTED CEILING PLAN

SCALE: 1/4"=1'-0"

GENERAL NOTES

DIMENSIONS:
ALL DIMENSIONS ARE TO FACE OF STUD, CENTER OF STUD, COLUMN GRID LINES, OR FACE OF CONCRETE AND CMU WALLS (NOMINAL), UNLESS OTHERWISE NOTED, WINDOW AND DOOR LOCATIONS ARE DIMENSIONED TO CENTER OF ROUGH OPENING. ALL "CLR" DIMENSIONS MUST BE MAINTAINED.

DOOR LOCATION:
ALL DOORS, HINGE SIDE, SHALL BE LOCATED 5" FROM ADJACENT PERPENDICULAR WALL, U.O.N.

ALIGNMENT:
WHERE NEW PARTITIONS ARE TO ALIGN WITH EXISTING PARTITIONS, REMOVE EXISTING CORNER BEAD(S), ALIGN, TAPE, AND SPACKLE WITH NEW PARTITION.

WALL BACKING:
BLOCKING OR BACKING SHALL BE PROVIDED IN PARTITIONS AS REQUIRED FOR WALL ATTACHED ITEMS. PROVIDE 6" HIGH, 16 GA. BACKING FOR CABINETRY, SHELVING, MARKER BOARDS, CHAIR RAILS, GRAB BARS, SHOWER SEATS, HANDRAILS, FIXTURES, EQUIPMENT, FURNISHINGS AND OTHER ITEMS AS REQUIRED. ALL WOOD BLOCKING, GROUNDS, ROUGH BUCKS AND MISCELLANEOUS BLOCKING SHALL BE FIRE RETARDANT TREATED IN ACCORDANCE WITH FIRE CODES.

PENETRATIONS:
PENETRATIONS OF FIRE-RESISTIVE WALLS, FLOOR-CEILINGS, AND ROOF-CEILINGS SHALL BE PROTECTED BY AN APPROVED PENETRATION FIRESTOP SYSTEM INSTALLED AS TESTED IN ACCORDANCE WITH ASTM E 814 OR UL 1479 AND SHALL HAVE AN F RATING (AND A T RATING AT FLOORS ONLY) OF NOT LESS THAN THE REQUIRED RATING OF THE WALL OR FLOOR PENETRATED. PENETRATIONS OF ACOUSTICAL WALLS FOR PIPES, DUCTS, AND OUTLETS SHALL BE SEALED WITH AN ACOUSTICAL SEALANT.

WALL & CEILING ACCESS PANELS:
PROVIDE ACCESS PANELS AS REQUIRED PER APPLICABLE CODES FOR MAINTENANCE ACCESS TO INSTALLED MEP EQUIPMENT. PROVIDE STAINLESS STEEL AT CERAMIC TILE LOCATIONS.

FIRE PROTECTION AT COLUMNS:
EXPOSED STRUCTURAL WIDE FLANGE COLUMNS SHALL BE WRAPPED WITH 1-HOUR FIRE RATED ASSEMBLY PER UL DESIGN X526

OWNER FURNISHED ITEMS:
ALL EQUIPMENT SHOWN IN THESE CONTRACT DOCUMENTS ARE OWNER FURNISHED / CONTRACTOR INSTALLED.

KEYNOTES

FP01	PLASTIC LAMINATE UPPER CABINET
FP02	PLASTIC LAMINATE BASE CABINET WITH SOLID SURFACE COUNTERTOP
FP03	DECORATIVE PLASTIC RESIN PANEL
FP04	CURTAIN TRACK ABOVE, REFER TO REFLECTED CEILING PLAN
FP05	PLASTIC LAMINATE ACCESSIBLE SINK APRON WITH SOLID SURFACE COUNTERTOP
FP06	PROVIDE 5/8" TYPE "X" GYPSUM WALL BOARD AT EXISTING FRAMING
FP07	PLASTIC LAMINATE RECEPTION COUNTER WITH SOLID SURFACE COUNTERTOP
FP08	PATCH AND REPAIR GYPSUM BOARD COLUMN FURRING AS REQUIRED
FP09	SLIDING PLASTIC RESIN DIVIDER PANELS
FP10	PLASTIC LAMINATE WARDROBE
FP11	LOW WALL WITH PLASTIC LAMINATE END CAP
FP12	CENTERLINE OF INFUSION BAYS
FP13	PATCH AND REPAIR EXISTING CARPET DAMAGED DURING DEMOLITION AS REQUIRED TO MATCH EXISTING
FP14	FLOORING TRANSITION
FP15	FLOOR DRAIN, REFER TO PLUMBING DRAWINGS
FP16	PATIENT TV, SEE DETAIL 3/S301
FP17	WARMING CABINET, SEE DETAIL 8/S301
FP18	REFRIGERATOR, SEE DETAIL 7/S301
FP19	ERGOTRON COMPUTER WALL BRACKET, SEE DETAIL 9/S301
FP20	LARGE SCREEN MONITOR, SEE DETAIL 4/S301
FP21	PATCH CERAMIC TILE FLOOR & WALL TO MATCH
FP22	ICE MACHINE
FP23	EXAM LIGHT OVERHEAD, SEE DETAIL 1/S301
FP24	FLOOR SINK, REFER TO PLUMBING DRAWINGS
FP25	STAINLESS STEEL SHELF

LEGEND

- EXISTING NON RATED WALL
- EXISTING CONCRETE WALL
- EXISTING 1-HOUR RATED WALL
- NON RATED WALL
- 1-HOUR RATED WALL
- WALL REFERENCE, SEE A601
- EXISTING VISION GLASS/ SPANDREL PANEL
- CORNER GUARD

KEY PLAN

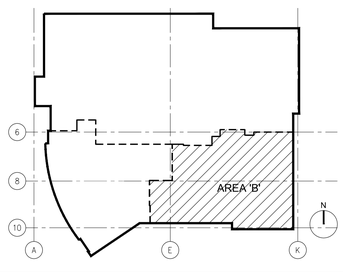

SHA

ARCHITECT

Savely Healthcare Architects
ARCHITECTURE + PLANNING + DESIGN

18008 Sky Park Circle, Suite 290
Irvine, CA 92614
(949) 431-0071

PROJECT

ARROWHEAD REGIONAL MEDICAL CENTER
MEDICAL OFFICE BUILDING
400 N. PEPPER AVE.
COLTON, CALIFORNIA 92324

ONCOLOGY-AMBULATORY CLINIC

NO.	DATE	REVISIONS
1	09.12.2019	ADDENDUM 1

PROFESSIONAL SEALS

LICENSED ARCHITECT RICK SAVELY C-19930 REN. 09-30-20 STATE OF CALIFORNIA

AGENCY APPROVAL

DRAWN BY	CHECKED BY	DATE
EED	GL	02.22.2019

PROJECT NUMBER
SHA # 18242.100

SHEET TITLE
FLOOR PLAN - AREA 'B'

SHEET NUMBER
A123

NOT FOR BID

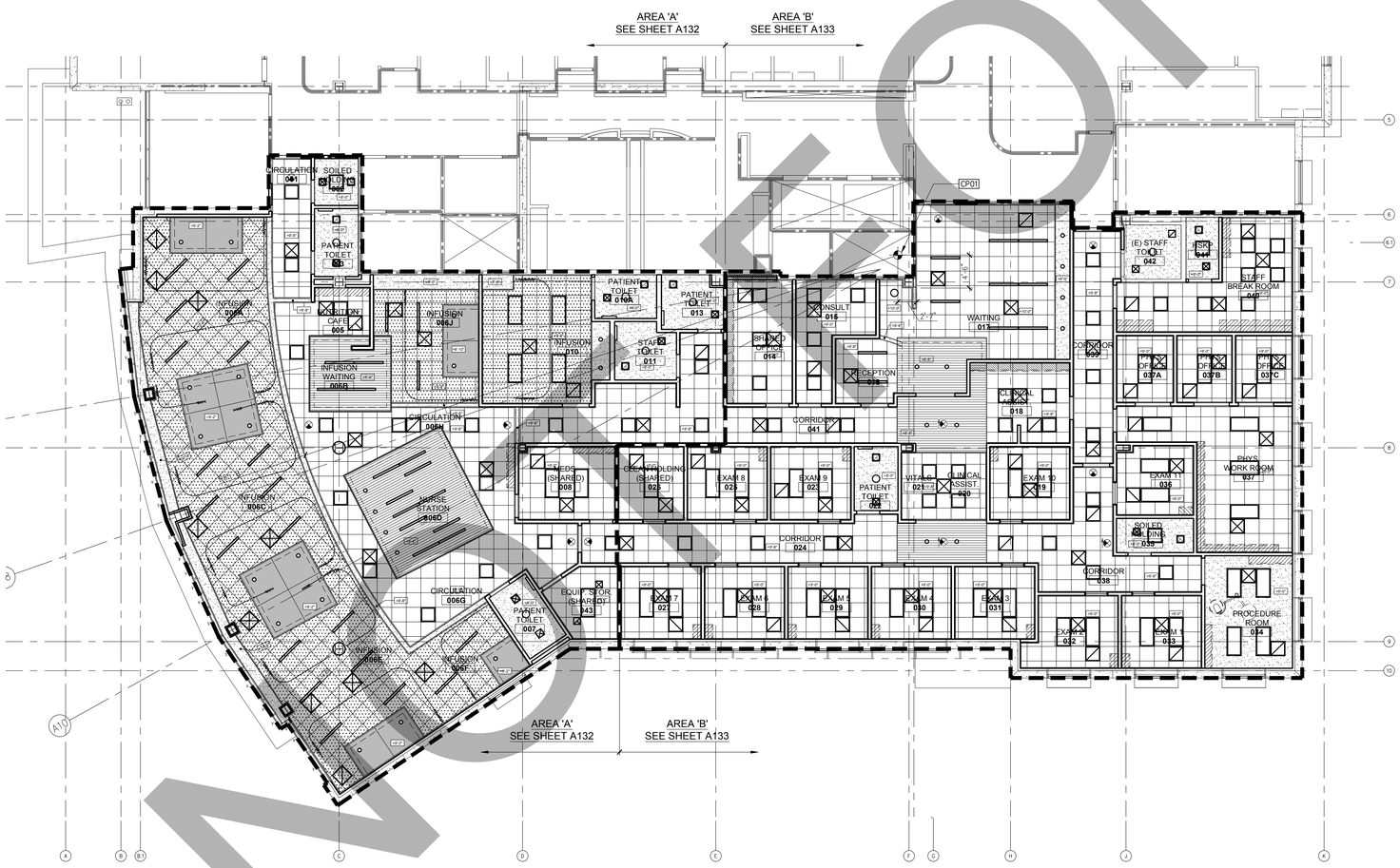

A3 SECOND FLOOR OVERALL REFLECTED CEILING PLAN

SCALE: 1/8"=1'-0"

GENERAL NOTES

- ALL EXISTING CEILINGS DEMOLISHED AS REQUIRED BY NEW WORK SHALL BE PATCHED, REPAIRED AND FINISHED TO MATCH EXISTING AND ADJACENT SURFACES.

KEYNOTES

FP01 START POINT OF RADIUS

LEGEND

- 2x4 SUSPENDED ACOUSTIC CEILING PANELS AND GRID (A16 / A604)
- GYPSUM BOARD CEILING (A10 / A604)
- PLASTIC LAMINATE SOFFIT W/ UNDER CABINET LIGHT FIXTURE (WHERE OCCURS)
- 2x4 RECESSED LIGHT FIXTURE, SEE ELECTRICAL DRAWINGS
- 2x2 RECESSED LIGHT FIXTURE, SEE ELECTRICAL DRAWINGS
- 4'-0" LINEAR RECESSED LIGHT FIXTURE, SEE ELECTRICAL DRAWINGS
- WALL MOUNTED LIGHT FIXTURE, SEE ELECTRICAL DRAWINGS
- MECHANICAL REGISTER, SEE MECHANICAL DRAWINGS
- +X'-X" CEILING HEIGHT
- EXIT SIGN - SHADING INDICATES TEXT SIDE, ARROW INDICATES DIRECTION
- FS FIRE SPRINKLER HEAD (CONCEALED)

KEY PLAN

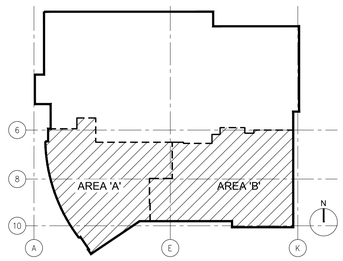

SHA

ARCHITECT

Savely Healthcare Architects
ARCHITECTURE + PLANNING + DESIGN

18008 Sky Park Circle, Suite 290
Irvine, CA 92614
(949) 431-0071

PROJECT

ARROWHEAD REGIONAL MEDICAL CENTER
MEDICAL OFFICE BUILDING
400 N. PEPPER AVE.
COLTON, CALIFORNIA 92324

ONCOLOGY-AMBULATORY CLINIC

NO.	DATE	REVISIONS
1	09.12.2019	ADDENDUM 1

PROFESSIONAL SEALS

LICENSED ARCHITECT RICK SAVELY C-19930 REN. 09-30-20 STATE OF CALIFORNIA

AGENCY APPROVAL

DRAWN BY	CHECKED BY	DATE
EED	GL	02.22.2019

PROJECT NUMBER
SHA # 18242.100

SHEET TITLE
OVERALL REFLECTED CEILING PLAN

SHEET NUMBER
A131

NOT FOR BID

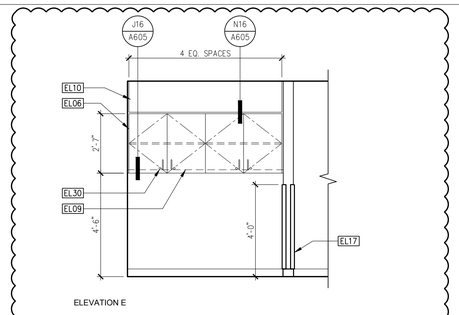

ELEVATION E

N2 CLINICAL ASSISTANT **018** SCALE: 3/8"=1'-0"

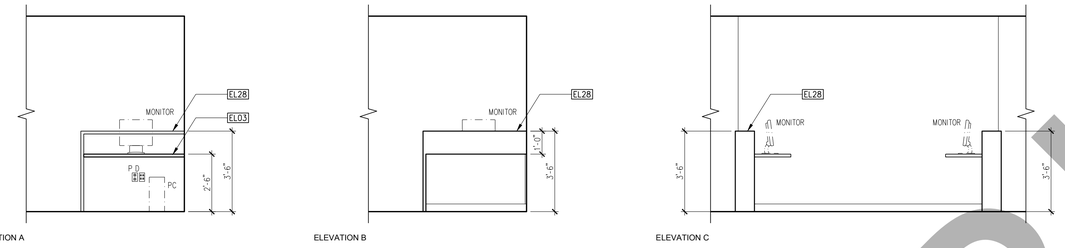

ELEVATION A ELEVATION B ELEVATION C

N6 CLINICAL ASSISTANT **020** SCALE: 3/8"=1'-0"

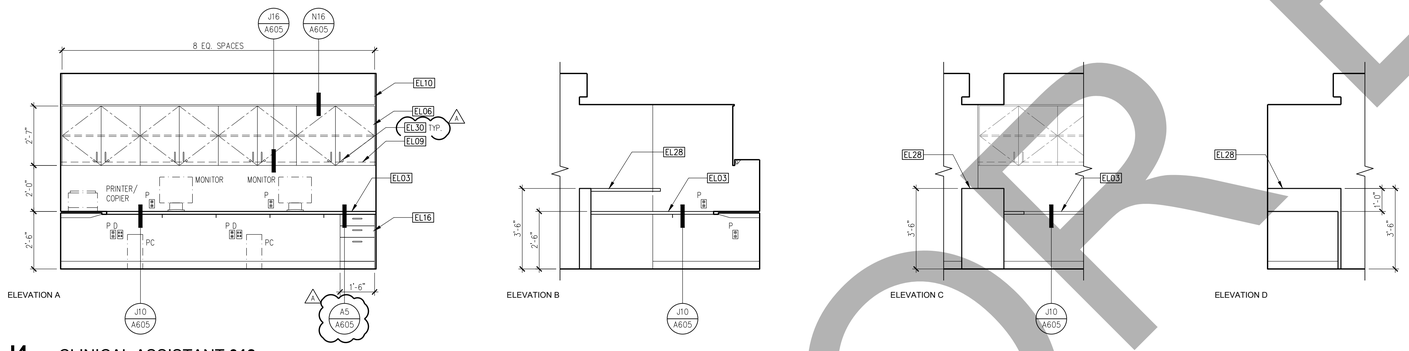

ELEVATION A ELEVATION B ELEVATION C ELEVATION D

J4 CLINICAL ASSISTANT **018** SCALE: 3/8"=1'-0"

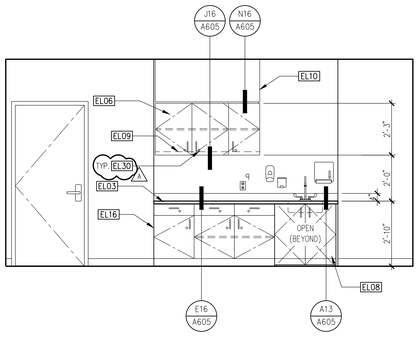

E2 PRIVATE INFUSION **010** SCALE: 3/8"=1'-0"

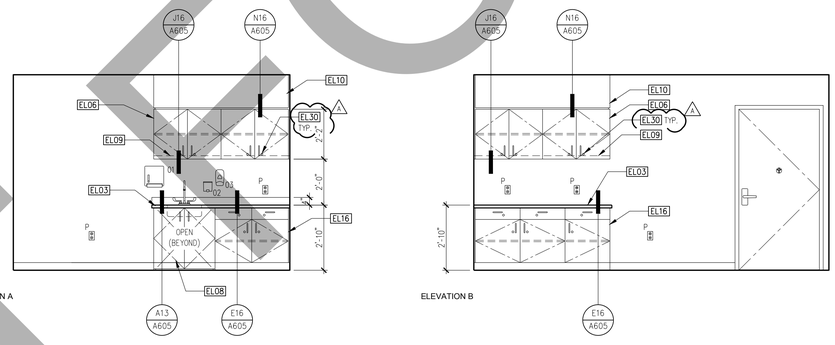

ELEVATION A ELEVATION B

E8 PROCEDURE ROOM **034** SCALE: 3/8"=1'-0"

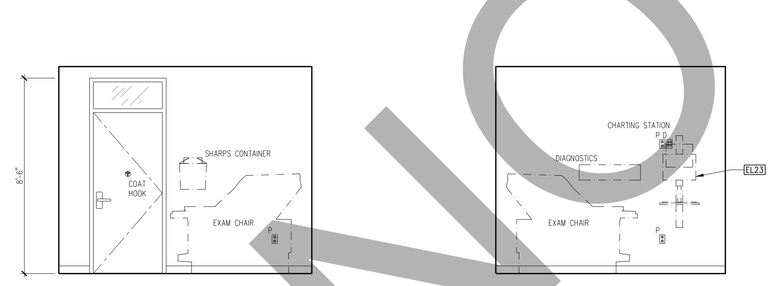

ELEVATION A ELEVATION B

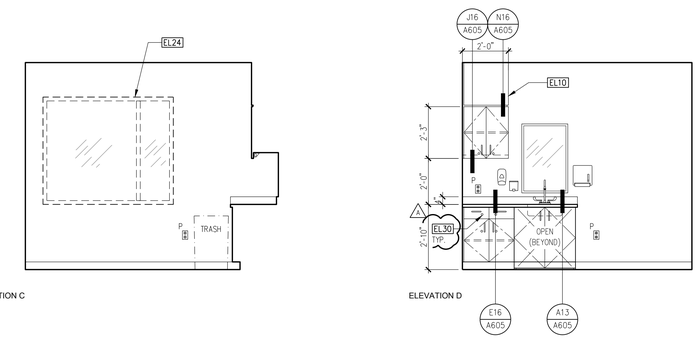

ELEVATION C ELEVATION D

A1 TYPICAL EXAM ROOM SCALE: 3/8"=1'-0"

NOT FOR BID

GENERAL NOTES

- REFER TO EQUIPMENT SCHEDULE FOR MORE INFORMATION ON EQUIPMENT SHOWN ON THIS PLAN AND IN THE EQUIPMENT LIST.
- REFER TO INTERIOR DESIGN DRAWINGS FOR ALL NURSE STATION AND RECEPTION COUNTER CASEWORK DETAILS.
- CABINET LOCKS SHALL **NOT** BE PROVIDED ON ACCESSIBLE SINK APRONS. 1

KEYNOTES

EL01	6" SELF COVE BASE
EL02	PREFABRICATED PLASTIC LAMINATE LOCKERS, SEE SPECIFICATIONS
EL03	SOLID SURFACE COUNTERTOP
EL04	PLASTIC LAMINATE FULL HEIGHT CABINET
EL05	LOW WALL WITH DECORATIVE GLASS PANEL
EL06	PLASTIC LAMINATE UPPER CABINET
EL07	PLASTIC LAMINATE MICROWAVE CABINET
EL08	PLASTIC LAMINATE ACCESSIBLE SINK APRON WITH OPERABLE PANEL
EL09	UNDER CABINET LIGHTING FIXTURE
EL10	PLASTIC LAMINATE SOFFIT
EL11	COAT HOOK
EL12	PLASTIC LAMINATE END PANEL
EL13	PLASTIC LAMINATE BENCH
EL14	INSULATED PROTECTIVE WRAP
EL15	MIRROR
EL16	PLASTIC LAMINATE BASE CABINET
EL17	CORNER GUARD
EL18	PAPER TOWEL DISPENSER AND WASTE RECEPTACLE
EL19	SOAP DISPENSER
EL20	HAND SANITIZER DISPENSER
EL21	GRAB BAR
EL22	(E) WINDOW WHERE OCCURS
EL23	WALL MOUNTED WORKSTATION, SEE **9/S301** FOR MOUNTING DETAIL
EL24	EXTERIOR WINDOW, WHERE OCCURS
EL25	TOILET SEAT COVER DISPENSER
EL26	SOLID SURFACE CAP AND END PANEL
EL27	PLASTIC RESIN SLIDING DIVIDER PANELS
EL28	SOLID SURFACE RECEPTION COUNTER
EL29	NURSE STATION CASEWORK PER INTERIOR DESIGN DRAWINGS
EL30	CABINET LOCK . SEE SPECIFICATIONS 1

SHA

ARCHITECT

Savely Healthcare Architects
ARCHITECTURE + PLANNING + DESIGN

18008 Sky Park Circle, Suite 290
Irvine, CA 92614
(949) 431-0071

PROJECT

ARROWHEAD REGIONAL MEDICAL CENTER
MEDICAL OFFICE BUILDING
400 N. PEPPER AVE.
COLTON, CALIFORNIA 92324

ONCOLOGY-AMBULATORY CLINIC

NO.	DATE	REVISIONS
1	09.12.2019	ADDENDUM 1

PROFESSIONAL SEALS

AGENCY APPROVAL

DRAWN BY	CHECKED BY	DATE
EED	GL	02.22.2019

PROJECT NUMBER
SHA # 18242.100

SHEET TITLE
INTERIOR ELEVATIONS

SHEET NUMBER
A201

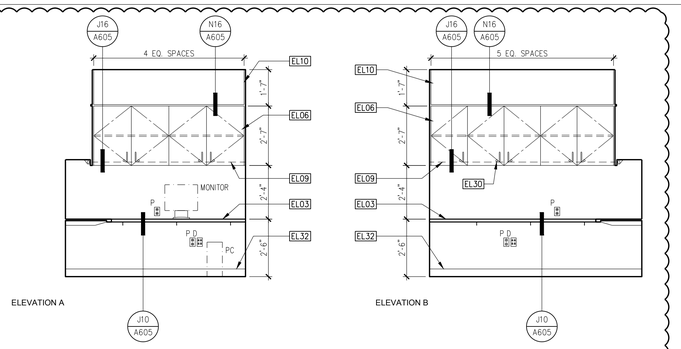

N2 PHYSICIANS OFFICE **037A, B, C** TYP. SCALE: 3/8"=1'-0"

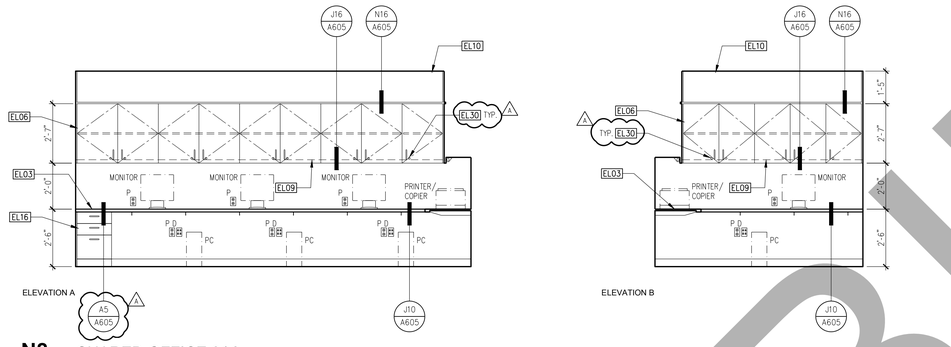

N8 SHARED OFFICE **014** SCALE: 3/8"=1'-0"

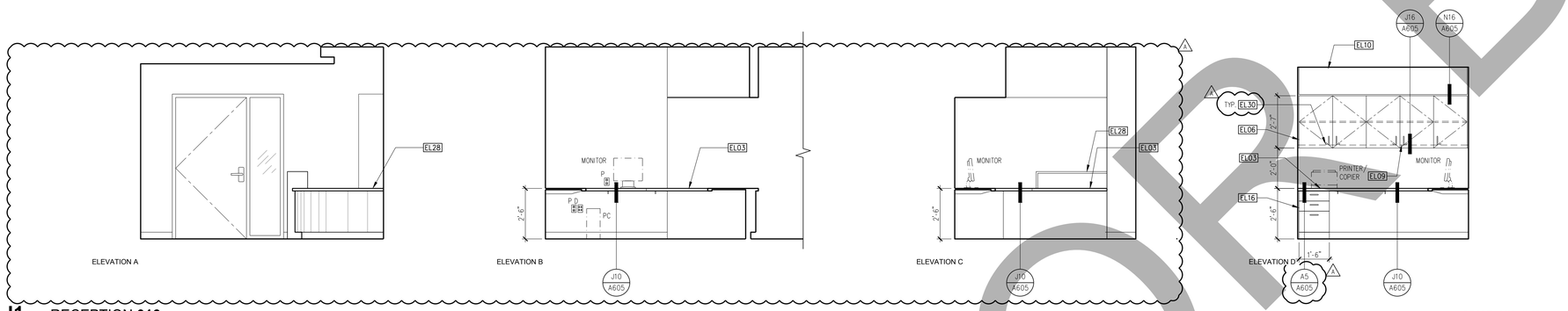

J1 RECEPTION **016** SCALE: 3/8"=1'-0"

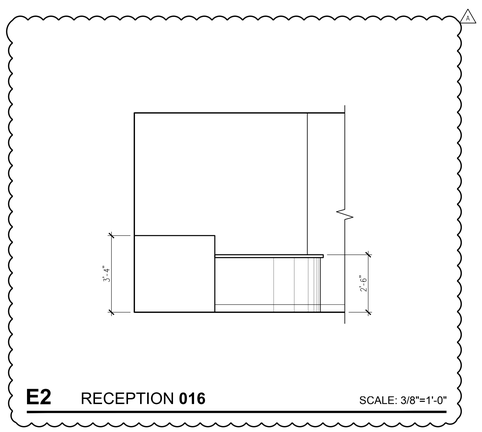

E2 RECEPTION **016** SCALE: 3/8"=1'-0"

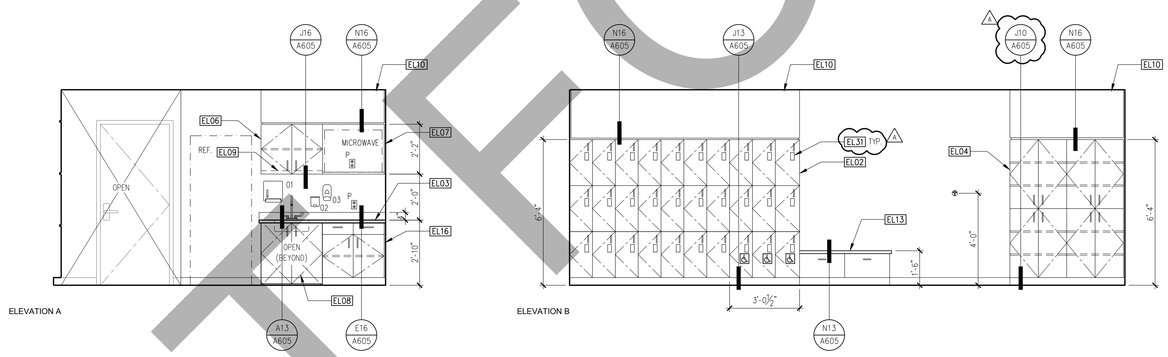

E6 STAFF BREAK ROOM **040** SCALE: 3/8"=1'-0"

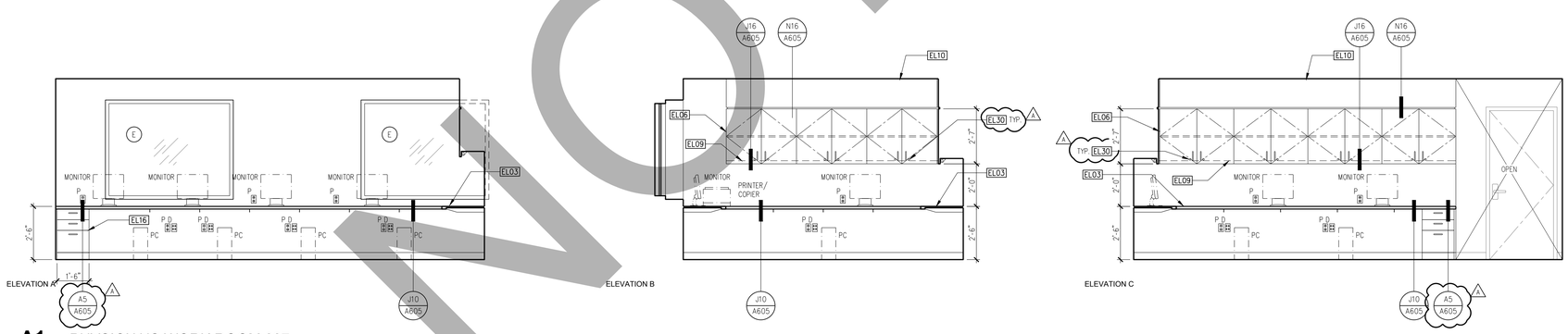

A1 PHYSICIANS WORK ROOM **037** SCALE: 3/8"=1'-0"

GENERAL NOTES

- REFER TO EQUIPMENT SCHEDULE FOR MORE INFORMATION ON EQUIPMENT SHOWN ON THIS PLAN AND IN THE EQUIPMENT LIST.
- REFER TO INTERIOR DESIGN DRAWINGS FOR ALL NURSE STATION AND RECEPTION COUNTER CASEWORK DETAILS.
- CABINET LOCKS SHALL **NOT** BE PROVIDED ON ACCESSIBLE SINK APRONS.

KEYNOTES

EL01	6" SELF COVE BASE
EL02	PREFABRICATED PLASTIC LAMINATE LOCKERS, SEE SPECIFICATIONS
EL03	SOLID SURFACE COUNTERTOP
EL04	PLASTIC LAMINATE FULL HEIGHT CABINET
EL05	LOW WALL WITH DECORATIVE GLASS PANEL
EL06	PLASTIC LAMINATE UPPER CABINET
EL07	PLASTIC LAMINATE MICROWAVE CABINET
EL08	PLASTIC LAMINATE ACCESSIBLE SINK APRON WITH OPERABLE PANEL
EL09	UNDER CABINET LIGHTING FIXTURE
EL10	PLASTIC LAMINATE SOFFIT
EL11	COAT HOOK
EL12	PLASTIC LAMINATE END PANEL
EL13	PLASTIC LAMINATE BENCH
EL14	INSULATED PROTECTIVE WRAP
EL15	MIRROR
EL16	PLASTIC LAMINATE BASE CABINET
EL17	CORNER GUARD
EL18	PAPER TOWEL DISPENSER AND WASTE RECEPTACLE
EL19	SOAP DISPENSER
EL20	HAND SANITIZER DISPENSER
EL21	GRAB BAR
EL22	(E) WINDOW WHERE OCCURS
EL23	WALL MOUNTED WORKSTATION, SEE **9/S301** FOR MOUNTING DETAIL
EL24	EXTERIOR WINDOW, WHERE OCCURS
EL25	TOILET SEAT COVER DISPENSER
EL26	SOLID SURFACE CAP AND END PANEL
EL27	PLASTIC RESIN SLIDING DIVIDER PANELS
EL28	SOLID SURFACE RECEPTION COUNTER
EL29	NURSE STATION CASEWORK PER INTERIOR DESIGN DRAWINGS
EL30	CABINET LOCK, SEE SPECIFICATIONS
EL31	PADLOCK HASP
EL32	4" RUBBER TOPSET BASE

ARCHITECT

Savely Healthcare Architects
ARCHITECTURE + PLANNING + DESIGN

18008 Sky Park Circle, Suite 290
Irvine, CA 92614
(949) 431-0071

PROJECT

ARROWHEAD REGIONAL MEDICAL CENTER
MEDICAL OFFICE BUILDING
400 N. PEPPER AVE.
COLTON, CALIFORNIA 92324

ONCOLOGY-AMBULATORY CLINIC

NO.	DATE	REVISIONS
1	09.12.2019	ADDENDUM 1

PROFESSIONAL SEALS

LICENSED ARCHITECT RICK SAVELY C-19930 EXP. 09-30-20 STATE OF CALIFORNIA

AGENCY APPROVAL

DRAWN BY	CHECKED BY	DATE
EED	GL	02.22.2019

PROJECT NUMBER
SHA # 18242.100

SHEET TITLE
INTERIOR ELEVATIONS

SHEET NUMBER
A202

NOT FOR BID

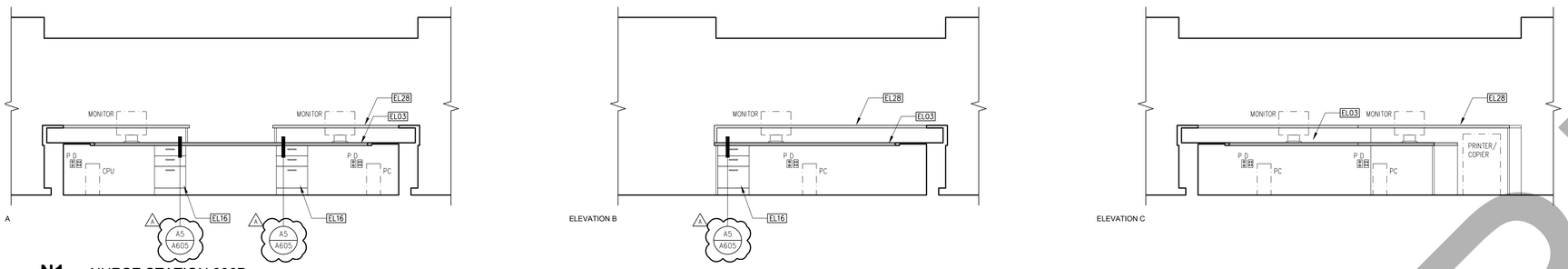

N1 NURSE STATION **006D**

SCALE: 3/8"=1'-0"

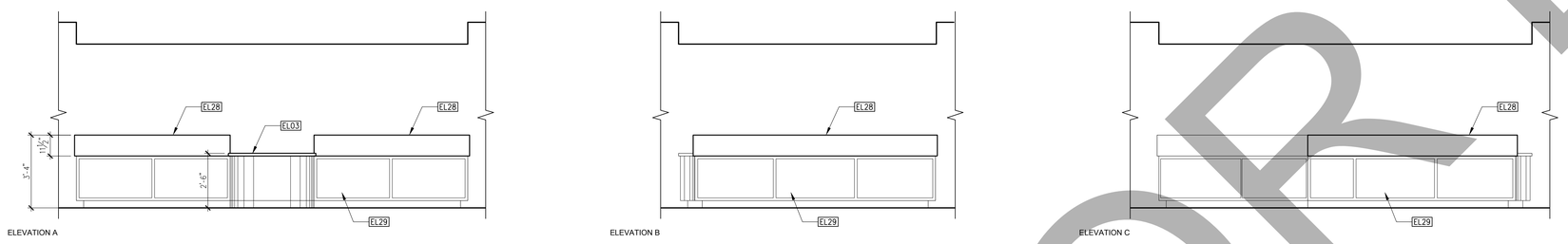

J1 NURSE STATION **006D**

SCALE: 3/8"=1'-0"

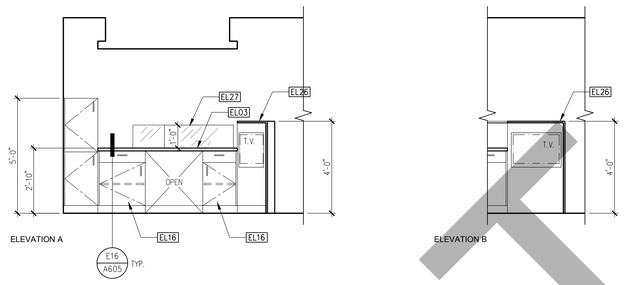

E3 TYPICAL INFUSION BAY

SCALE: 3/8"=1'-0"

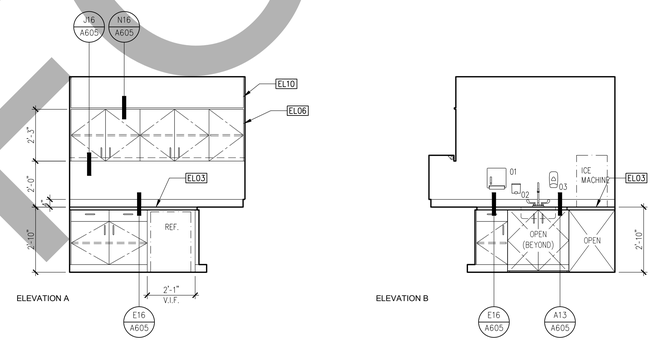

E10 NUTRITION CAFE **005**

SCALE: 3/8"=1'-0"

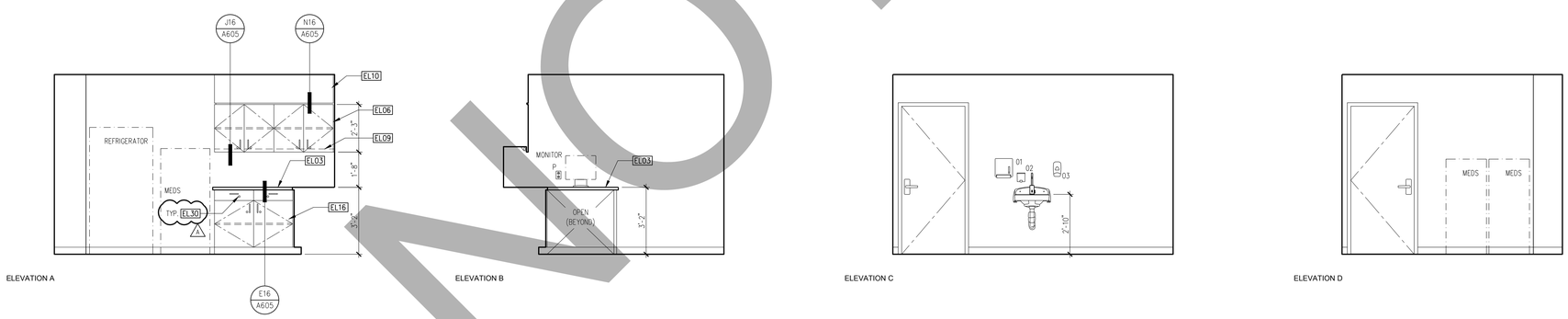

A1 MEDICATION (SHARED) **008**

SCALE: 3/8"=1'-0"

GENERAL NOTES

- REFER TO EQUIPMENT SCHEDULE FOR MORE INFORMATION ON EQUIPMENT SHOWN ON THIS PLAN AND IN THE EQUIPMENT LIST.
- REFER TO INTERIOR DESIGN DRAWINGS FOR ALL NURSE STATION AND RECEPTION COUNTER CASEWORK DETAILS.
- CABINET LOCKS SHALL **NOT** BE PROVIDED ON ACCESSIBLE SINK APRONS. (1)

KEYNOTES

EL01	6" SELF COVE BASE
EL02	PREFABRICATED PLASTIC LAMINATE LOCKERS, SEE SPECIFICATIONS
EL03	SOLID SURFACE COUNTERTOP
EL04	PLASTIC LAMINATE FULL HEIGHT CABINET
EL05	LOW WALL WITH DECORATIVE GLASS PANEL
EL06	PLASTIC LAMINATE UPPER CABINET
EL07	PLASTIC LAMINATE MICROWAVE CABINET
EL08	PLASTIC LAMINATE ACCESSIBLE SINK APRON WITH OPERABLE PANEL
EL09	UNDER CABINET LIGHTING FIXTURE
EL10	PLASTIC LAMINATE SOFFIT
EL11	COAT HOOK
EL12	PLASTIC LAMINATE END PANEL
EL13	PLASTIC LAMINATE BENCH
EL14	INSULATED PROTECTIVE WRAP
EL15	MIRROR
EL16	PLASTIC LAMINATE BASE CABINET
EL17	CORNER GUARD
EL18	PAPER TOWEL DISPENSER AND WASTE RECEPTACLE
EL19	SOAP DISPENSER
EL20	HAND SANITIZER DISPENSER
EL21	GRAB BAR
EL22	(E) WINDOW WHERE OCCURS
EL23	WALL MOUNTED WORKSTATION, SEE **9/S301** FOR MOUNTING DETAIL
EL24	EXTERIOR WINDOW, WHERE OCCURS
EL25	TOILET SEAT COVER DISPENSER
EL26	SOLID SURFACE CAP AND END PANEL
EL27	PLASTIC RESIN SLIDING DIVIDER PANELS
EL28	SOLID SURFACE RECEPTION COUNTER
EL29	NURSE STATION CASEWORK PER INTERIOR DESIGN DRAWINGS
EL30	CABINET LOCK, SEE SPECIFICATIONS (1)

SHA

ARCHITECT

Savely Healthcare Architects
ARCHITECTURE + PLANNING + DESIGN

18008 Sky Park Circle, Suite 290
Irvine, CA 92614
(949) 431-0071

PROJECT

ARROWHEAD REGIONAL MEDICAL CENTER
MEDICAL OFFICE BUILDING
400 N. PEPPER AVE.
COLTON, CALIFORNIA 92324

ONCOLOGY-AMBULATORY CLINIC

NO.	DATE	REVISIONS
1	09.12.2019	ADDENDUM 1

PROFESSIONAL SEALS

AGENCY APPROVAL

DRAWN BY	CHECKED BY	DATE
EED	GL	02.22.2019

PROJECT NUMBER
SHA # 18242.100

SHEET TITLE
INTERIOR ELEVATIONS

SHEET NUMBER
A203

NOT FOR BID

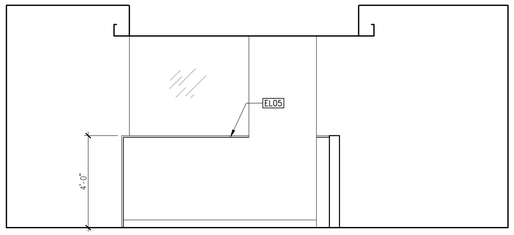

N3 INFUSION WAITING **006B** SCALE: 3/8"=1'-0"

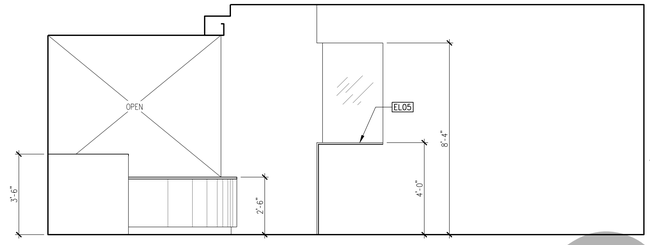

N9 WAITING **017** SCALE: 3/8"=1'-0"

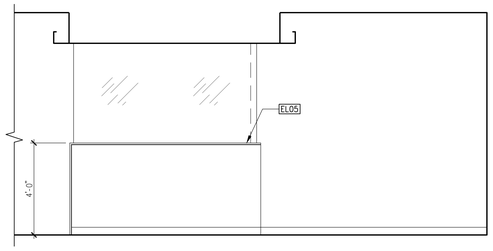

J1 INFUSION **006J** SCALE: 3/8"=1'-0"

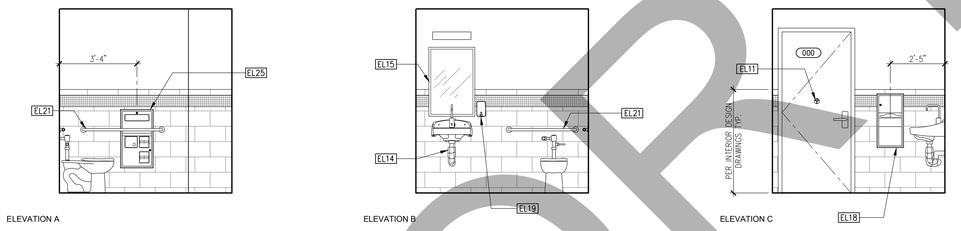

J7 PATIENT TOILET **013** SCALE: 3/8"=1'-0"

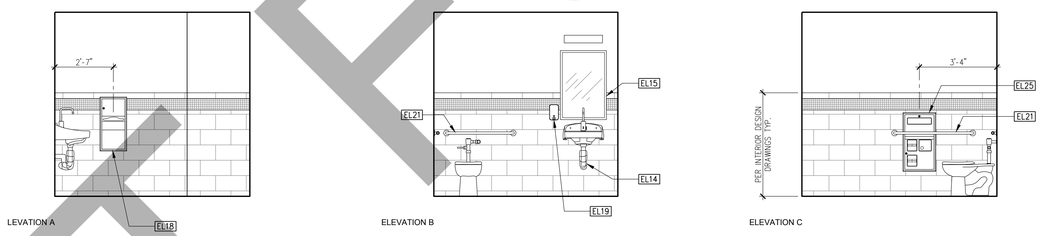

E7 STAFF TOILET **011** SCALE: 3/8"=1'-0"

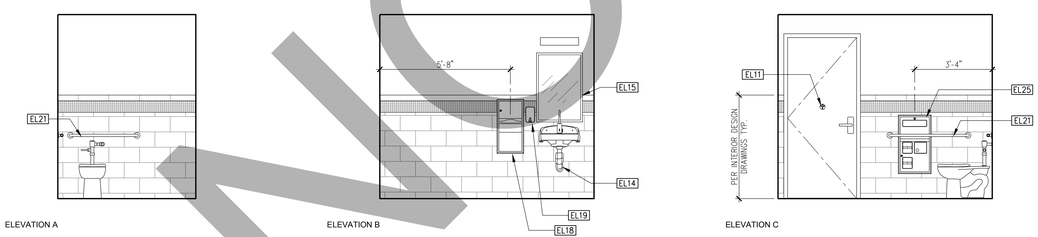

A3 PATIENT TOILET **003** SCALE: 3/8"=1'-0"

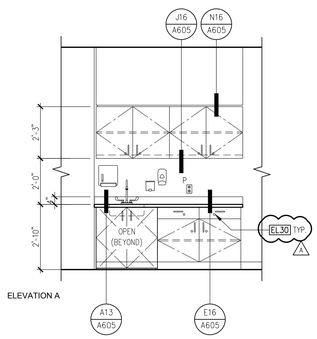

A12 NURSE STATION **006D** SCALE: 3/8"=1'-0"

GENERAL NOTES

- REFER TO EQUIPMENT SCHEDULE FOR MORE INFORMATION ON EQUIPMENT SHOWN ON THIS PLAN AND IN THE EQUIPMENT LIST.
- REFER TO INTERIOR DESIGN DRAWINGS FOR ALL NURSE STATION AND RECEPTION COUNTER CASEWORK DETAILS.
- CABINET LOCKS SHALL **NOT** BE PROVIDED ON ACCESSIBLE SINK APRONS. 1

KEYNOTES

EL01	6" SELF COVE BASE
EL02	PREFABRICATED PLASTIC LAMINATE LOCKERS, SEE SPECIFICATIONS
EL03	SOLID SURFACE COUNTERTOP
EL04	PLASTIC LAMINATE FULL HEIGHT CABINET
EL05	LOW WALL WITH DECORATIVE GLASS PANEL
EL06	PLASTIC LAMINATE UPPER CABINET
EL07	PLASTIC LAMINATE MICROWAVE CABINET
EL08	PLASTIC LAMINATE ACCESSIBLE SINK APRON WITH OPERABLE PANEL
EL09	UNDER CABINET LIGHTING FIXTURE
EL10	PLASTIC LAMINATE SOFFIT
EL11	COAT HOOK
EL12	PLASTIC LAMINATE END PANEL
EL13	PLASTIC LAMINATE BENCH
EL14	INSULATED PROTECTIVE WRAP
EL15	MIRROR
EL16	PLASTIC LAMINATE BASE CABINET
EL17	CORNER GUARD
EL18	PAPER TOWEL DISPENSER AND WASTE RECEPTACLE
EL19	SOAP DISPENSER
EL20	HAND SANITIZER DISPENSER
EL21	GRAB BAR
EL22	(E) WINDOW WHERE OCCURS
EL23	WALL MOUNTED WORKSTATION, SEE **9/S301** FOR MOUNTING DETAIL
EL24	EXTERIOR WINDOW, WHERE OCCURS
EL25	TOILET SEAT COVER DISPENSER
EL26	SOLID SURFACE CAP AND END PANEL
EL27	PLASTIC RESIN SLIDING DIVIDER PANELS
EL28	SOLID SURFACE RECEPTION COUNTER
EL29	NURSE STATION CASEWORK PER INTERIOR DESIGN DRAWINGS
EL30	CABINET LOCK, SEE SPECIFICATIONS 1

SHA

ARCHITECT

Savely Healthcare Architects
ARCHITECTURE + PLANNING + DESIGN

18008 Sky Park Circle, Suite 290
Irvine, CA 92614
(949) 431-0071

PROJECT

ARROWHEAD REGIONAL MEDICAL CENTER
MEDICAL OFFICE BUILDING
400 N. PEPPER AVE.
COLTON, CALIFORNIA 92324

ONCOLOGY-AMBULATORY CLINIC

NO.	DATE	REVISIONS
1	09.12.2019	ADDENDUM 1

PROFESSIONAL SEALS

AGENCY APPROVAL

DRAWN BY	CHECKED BY	DATE
EED	GL	02.22.2019

PROJECT NUMBER
SHA # 18242.100

SHEET TITLE
INTERIOR ELEVATIONS

SHEET NUMBER
A204

NOT FOR BID

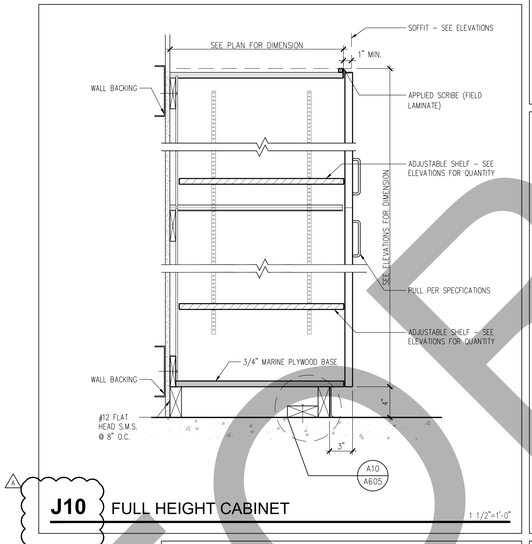

J10 FULL HEIGHT CABINET 1 1/2"=1'-0"

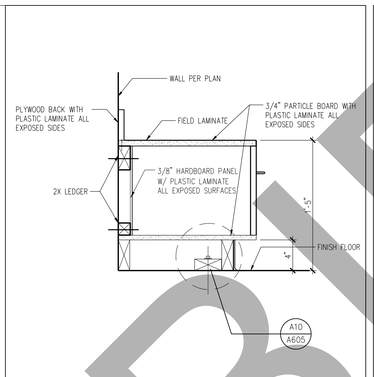

N13 PLASTIC LAMINATE BENCH 1 1/2"=1'-0"

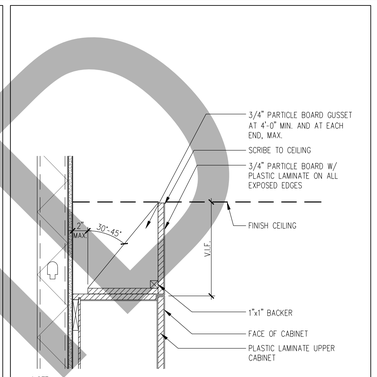

NOTE: PROVIDE WALL BACKING PER BACKING DIAGRAM

N16 SOFFIT SCALE: 1 1/2"=1'-0"

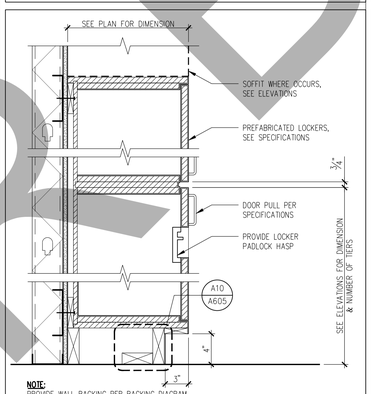

NOTE: PROVIDE WALL BACKING PER BACKING DIAGRAM

J13 PREFAB. LOCKERS SCALE: 1 1/2"=1'-0"

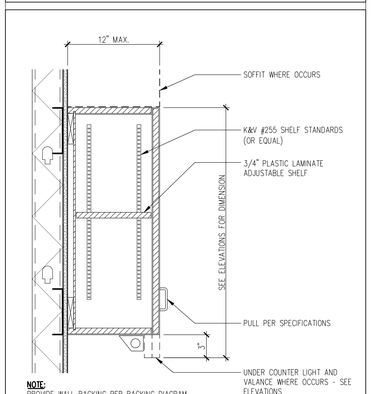

NOTE: PROVIDE WALL BACKING PER BACKING DIAGRAM

J16 UPPER CABINET SCALE: 1 1/2"=1'-0"

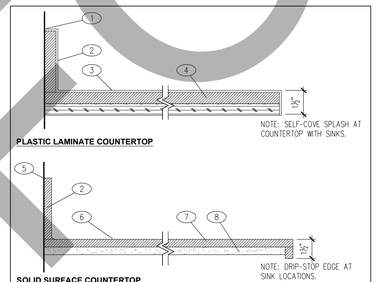

KEYNOTES

1. SCRIBE TO WALL
2. BACKSPLASH WHERE OCCURS - SEE ELEVATIONS
3. PLASTIC LAMINATE FINISH
4. ¾" MIN. PARTICLE BOARD CORE
5. SEALANT
6. SELF-COVE WHERE SINK OCCURS, SEE FLOOR PLAN
7. ½" THICK SOLID SURFACE
8. PARTICLE BOARD, U.N.O.

E10 COUNTERTOPS SCALE: 3"=1'-0"

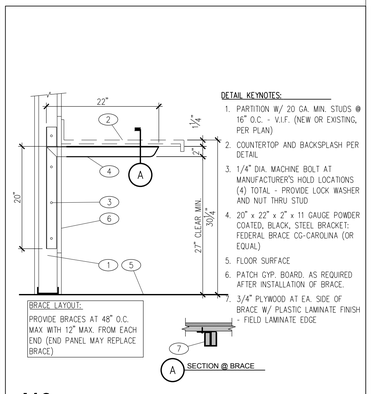

DETAIL KEYNOTES:

1. PARTITION W/ 20 GA. MIN. STUDS @ 16" O.C. - V.I.F. (NEW OR EXISTING, PER PLAN)
2. COUNTERTOP AND BACKSPLASH PER DETAIL
3. 1/4" DIA. MACHINE BOLT AT MANUFACTURER'S HOLD LOCATIONS (4) TOTAL - PROVIDE LOCK WASHER AND NUT THRU STUD
4. 20" x 22" x 2" x 11 GAUGE POWDER COATED, BLACK, STEEL BRACKET: FEDERAL BRACE CG-CAROLINA (OR EQUAL)
5. FLOOR SURFACE
6. PATCH GYP. BOARD. AS REQUIRED AFTER INSTALLATION OF BRACE.
7. 3/4" PLYWOOD AT EA. SIDE OF BRACE W/ PLASTIC LAMINATE FINISH - FIELD LAMINATE EDGE

BRACE LAYOUT:

PROVIDE BRACES AT 48" O.C. MAX WITH 12" MAX. FROM EACH END (END PANEL MAY REPLACE BRACE)

J10 COUNTERTOP SUPPORT 12"=1'-0"

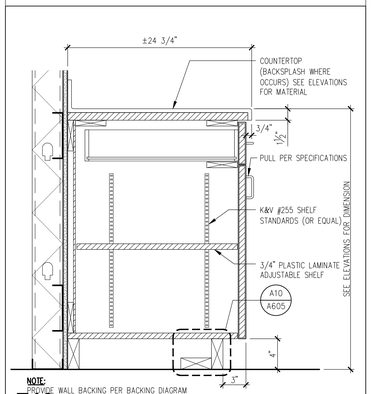

NOTE: PROVIDE WALL BACKING PER BACKING DIAGRAM

E16 BASE CABINET SCALE: 1 1/2"=1'-0"

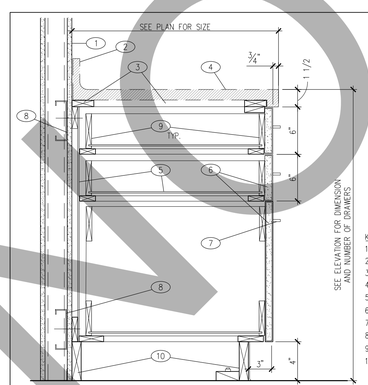

KEYNOTES:

1. WALL PER PLAN
2. BACKSPLASH - SEE INTERIOR ELEVATION FOR LOCATION
3. WOOD FRAMING
4. COUNTERTOP, SEE ELEVATION FOR TYPE
5. 1/4" CABINET BACK AND DRAWER BOTTOM
6. 3/4" PARTICLE BOARD WITH PLASTIC LAMINATE ALL EXPOSED SIDES
7. PULL PER SPECIFICATIONS
8. WALL BACKING - SEE DETAILS **N9/A500 & A14/A501**
9. 5/8" PLYWOOD BACKS, SIDES AND SUB-FRONTS
10. 2X4 NET BLOCKING

NOTE: POLYESTER OVERLAY FINISH ON ALL INTERIOR SURFACES U.N.O.

A5 BASE CABINET (3 DRAWERS) SCALE: 1 1/2"=1'-0"

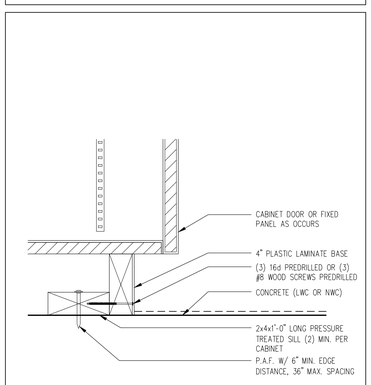

A10 CABINET ANCHORAGE SCALE: 3"=1'-0"

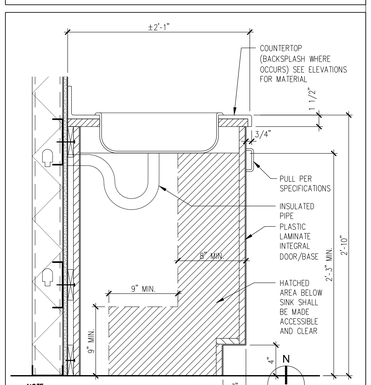

NOTE: PROVIDE WALL BACKING PER BACKING DIAGRAM

A13 ADA SINK APRON SCALE: 1 1/2"=1'-0"

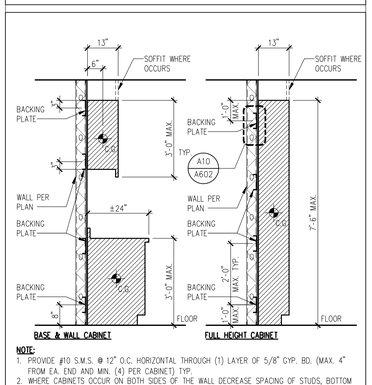

NOTE:

1. PROVIDE #10 S.M.S. @ 12" O.C. HORIZONTAL THROUGH (1) LAYER OF 5/8" GYP. BD. (MAX. 4" FROM EA. END AND MIN. (4) PER CABINET) TYP.
2. WHERE CABINETS OCCUR ON BOTH SIDES OF THE WALL DECREASE SPACING OF STUDS, BOTTOM & TOP TRACK ANCHORAGE BY 50% ALONG THE LENGTH OF THE CASEWORK

A16 BACKING DIAGRAM SCALE: 1/2"=1'-0"

NOT FOR BID

SHA

ARCHITECT

Savely Healthcare Architects
ARCHITECTURE + PLANNING + DESIGN

18008 Sky Park Circle, Suite 290
Irvine, CA 92614
(949) 431-0071

PROJECT

ARROWHEAD REGIONAL MEDICAL CENTER
MEDICAL OFFICE BUILDING
400 N. PEPPER AVE.
COLTON, CALIFORNIA 92324

ONCOLOGY-AMBULATORY CLINIC

NO.	DATE	REVISIONS
1	09.12.2019	ADDENDUM 1

PROFESSIONAL SEALS

LICENSED ARCHITECT RICK SAVELY C-19938 REN. 09-30-19 STATE OF CALIFORNIA

AGENCY APPROVAL

DRAWN BY	CHECKED BY	DATE
EED	GL	02.22.2019

PROJECT NUMBER
SHA # 18242.100

SHEET TITLE
DETAILS - CASEWORK

SHEET NUMBER
A605

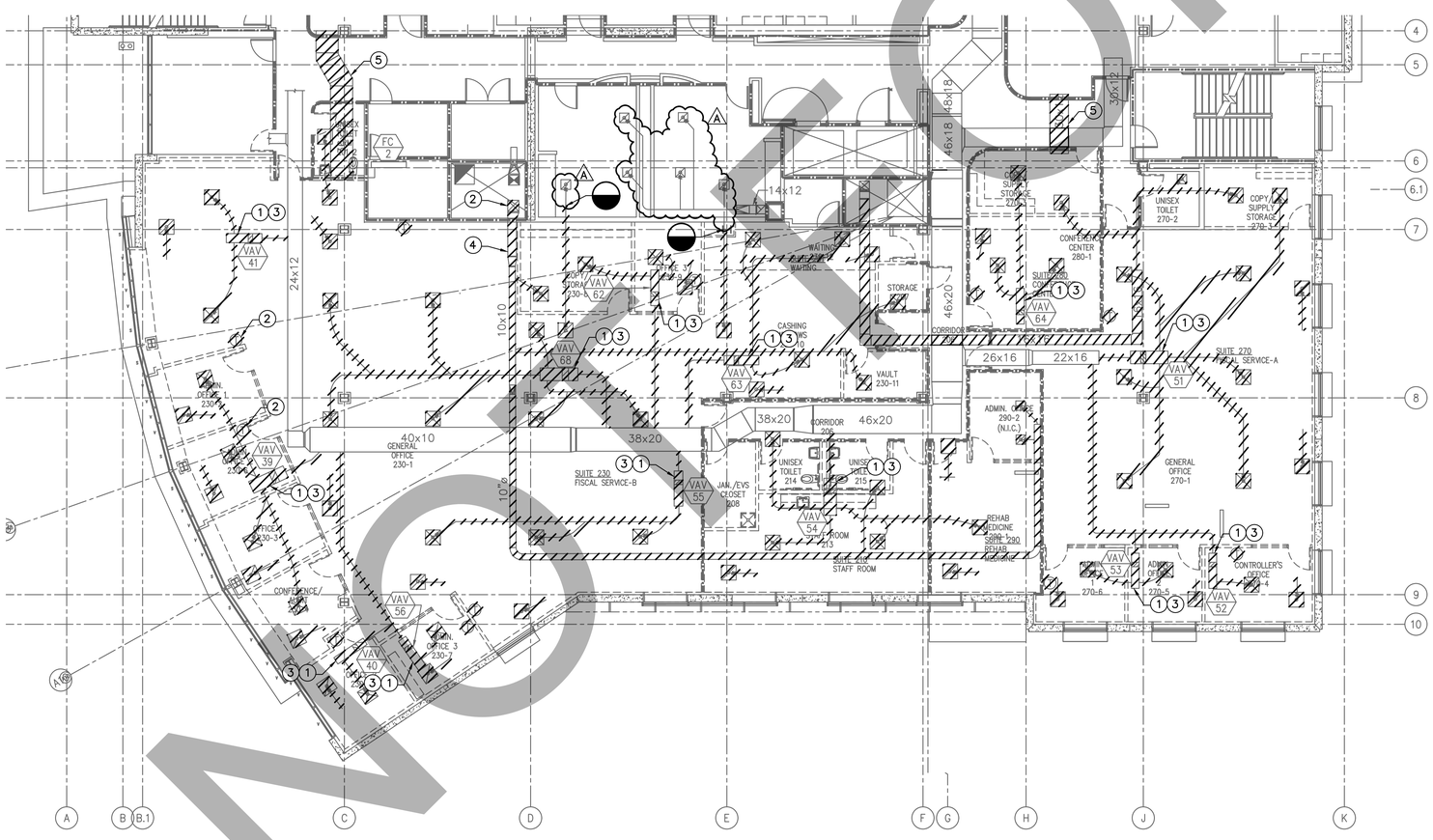

A3 HVAC DEMOLITION PLAN

SCALE: 1/8"=1'-0"

GENERAL NOTES

1. CONTRACTOR SHALL PROVIDE ALLOWANCES TO RELOCATE THE EXISTING UTILITIES ABOVE THE CEILING OF RESTROOMS TO ACCOMMODATE THE NEW TRANSFER DUCT SHOWN ON SHEET M121.
2. CONTRACTOR SHALL DEMOLISH EXISTING HEATING HOT WATER SUPPLY AND RETURN AS NECESSARY TO FACILITATE THE INSTALLATION OF THE NEW HEATING HOT WATER SUPPLY AND RETURN AS SHOWN ON SHEETS M122P AND M123P.

KEYNOTES

1. DEMOLISH EXISTING VAV TERMINAL, REHEAT COIL, HOT WATER PIPING, AND ASSOCIATED DUCTWORK AND SUPPORTS.
2. DEMOLISH EXISTING EXHAUST DUCTS INSIDE THE MECHANICAL SHAFT TO ACCOMMODATE TWO OFFSETS, ONE ON THE FIRST FLOOR AND ONE ON THE THIRD FLOOR.
3. DEMOLISH EXISTING DUCTWORK, SUPPORTS, GRILLES AND DIFFUSERS.
4. DEMOLISH EXISTING EXHAUST DUCTS AND ASSOCIATED COMBINATION FIRE/SMOKE DETECTORS.
5. DEMOLISH EXISTING TRANSFER DUCTS AND ASSOCIATED COMBINATION FIRE/SMOKE DETECTORS.

LEGEND

KEY PLAN

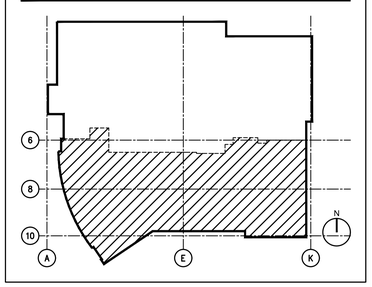

NOT FOR BID

SHA

ARCHITECT

Savely Healthcare Architects
ARCHITECTURE + PLANNING + DESIGN

18008 Sky Park Circle, Suite 290
Irvine, CA 92614
(949) 431-0071

PROJECT

ARROWHEAD REGIONAL MEDICAL CENTER
MEDICAL OFFICE BUILDING
400 N. PEPPER AVE.
COLTON, CALIFORNIA 92324

ONCOLOGY-AMBULATORY CLINIC

GOSS ENGINEERING
255 East Rincon St., Suite 301
Corona, CA 92879
P 951.340.1977 | F 951.340.1090
www.gossengineering.com
FILE NO.: 118-07-04

NO.	DATE	REVISIONS
1	09.12.2019	ADDENDUM 1

PROFESSIONAL SEALS

LICENSED ARCHITECT RICK SAVELY C-19938 REN. 09-30-20 STATE OF CALIFORNIA

REGISTERED PROFESSIONAL ENGINEER JOHN A. GOSS No. M36781 Exp. 3-31-20 MECHANICAL STATE OF CALIFORNIA

AGENCY APPROVAL

DRAWN BY	CHECKED BY	DATE
AEP	SAG	02.22.2019

PROJECT NUMBER
SHA # 18242.100

SHEET TITLE
HVAC DEMOLITION PLAN

SHEET NUMBER
M111

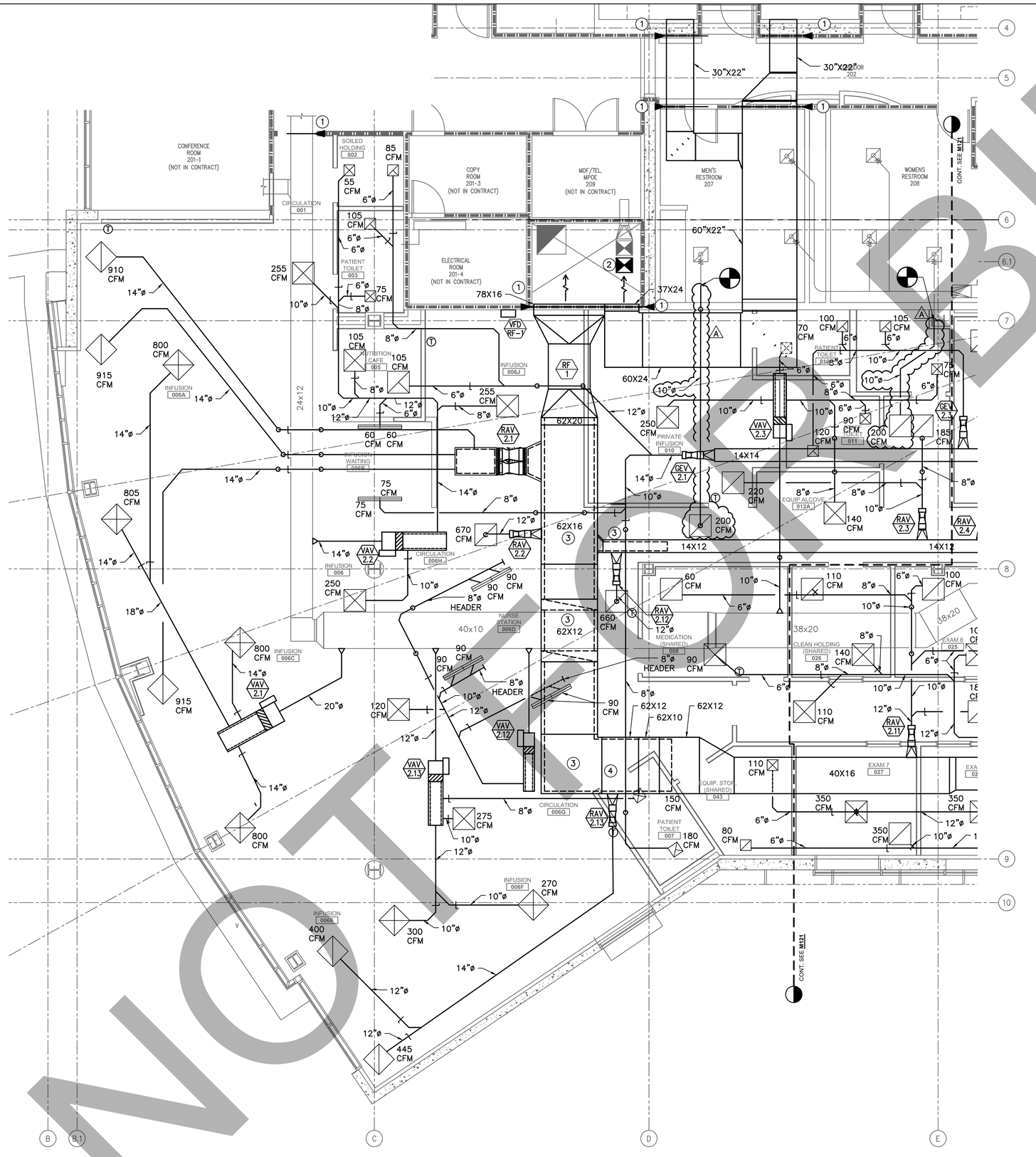

A4 PARTIAL MECHANICAL FLOOR PLAN - AREA 'A'

SCALE: 1/4"=1'-0"

NOT FOR BID

GENERAL NOTES

1. REFER TO DETAIL 1/M501 FOR CEILING DIFFUSER/GRILLE INSTALLATION DETAILS.
2. REFER TO DETAIL 4/M501 FOR LINEAR DIFFUSER/GRILLE INSTALLATION DETAILS.
3. REFER TO DETAIL 5/M501 FOR GENERAL DUCTWORK INSTALLATION DETAILS.
4. REFER TO DETAIL 6/M501 FOR DUCT HANGER SUPPORT INSTALLATION DETAILS.
5. REFER TO DETAIL 1/M502 AND 1/M502 FOR HOT WATER PIPE SUPPORT INSTALLATION DETAIL.
6. REFER TO DETAIL 3/M502 FOR PIPE PENETRATIONS THROUGH NON–RATED WALLS.
7. REFER TO DETAIL 4/M502 FOR VAV TERMINAL UNIT INSTALLATION.
8. REFER TO DETAIL 6/M502 FOR REHEAT COILING PIPING INSTALLATIONS.
9. REFER TO DETAIL 7/M502 FOR VENTURI VALVE INSTALLATION.
10. REFER TO DETAIL 8/M502 AND 2/M503 FOR RETURN FAN INSTALLATION DETAILS.

KEYNOTES

1. PROVIDE COMBINATION FIRE/SMOKE DAMPER. REFER TO DETAIL 4/M503 FOR INSTALLATION DETAILS.
2. RELOCATE EXISTING DUCT IN SHAFT TO PROVIDE ALLOWANCE IN FRONT OF NEW TRANSFER DUCT.
3. PROVIDE DUCTWORK WITH ACOUSTICAL LINING.
4. PROVIDE 1–INCH DOOR UNDERCUT.

LEGEND

KEY PLAN

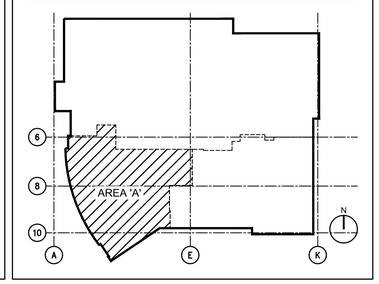

SHA

ARCHITECT

Savely Healthcare Architects
ARCHITECTURE + PLANNING + DESIGN
18008 Sky Park Circle, Suite 290
Irvine, CA 92614
(949) 431-0071

PROJECT

ARROWHEAD REGIONAL MEDICAL CENTER
MEDICAL OFFICE BUILDING
400 N. PEPPER AVE.
COLTON, CALIFORNIA 92324

ONCOLOGY-AMBULATORY CLINIC

GOSS ENGINEERING
255 East Rincon St., Suite 301
Corona, CA 92879
P 951.340.1977 | F 951.340.1090
www.gossengineering.com

FILE NO.: 118-07-04

NO.	DATE	REVISIONS
1	09.12.2019	ADDENDUM 1

PROFESSIONAL SEALS

LICENSED ARCHITECT RICK SAVELY C-19938 REN. 09-30-20 STATE OF CALIFORNIA

REGISTERED PROFESSIONAL ENGINEER SAM A. GRIFFITH No. M36781 Exp. 3-31-20 MECHANICAL STATE OF CALIFORNIA

AGENCY APPROVAL

DRAWN BY	CHECKED BY	DATE
AEP	SAG	02.22.2019

PROJECT NUMBER
SHA # 18242.100

SHEET TITLE
PARTIAL MECHANICAL FLOOR PLAN - AREA 'A'

SHEET NUMBER
M122

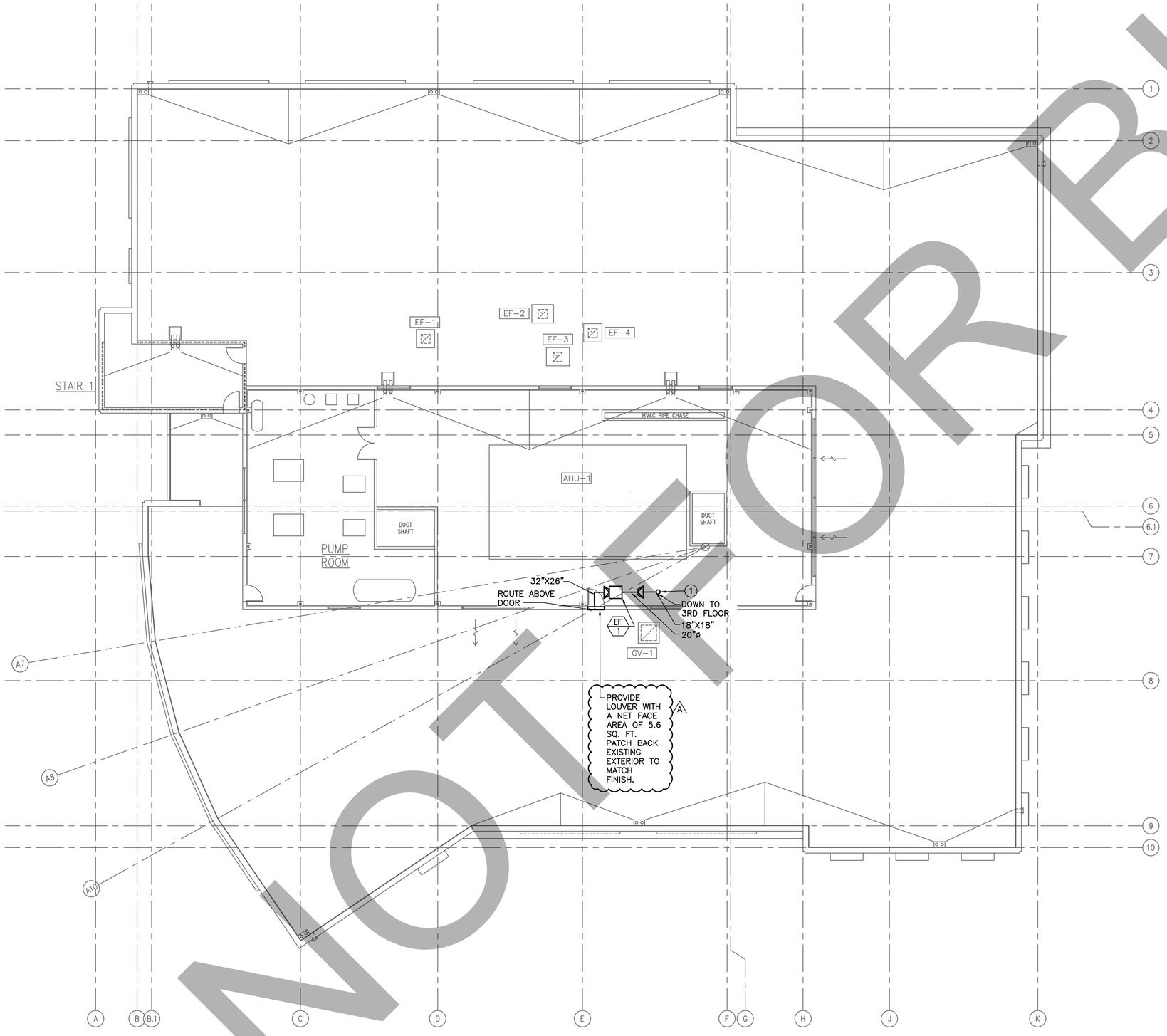

A6 MECHANICAL ROOF PLAN

SCALE: 1/8"=1'-0"

N

GENERAL NOTES

1. RELOCATE WALL MOUNT STRIP LIGHT TO ALLOW FOR PROPOSED NEW EXHAUST DUCT AND EXTERIOR LOUVER.
2. NEW EXHAUST FAN SHALL SUSPEND FROM ROOF. REFER TO 2/M503 INSTALLATION DETAILS.
3. CONTRACTOR SHALL SCAN THE EXISTING ROOF SLAB BEFORE SAW CUTTING TO ENSURE NO STRUCTURAL BEAMS WILL BE DAMAGED.
4. REFER TO ARCHITECTURAL DETAIL SHEET A602 FOR OPENING FRAMING. (A)

KEYNOTES

(1) PROVIDE FLOOR FIRE/SMOKE DAMPER TO MAINTAIN RATING. REFER TO 4/M503 FOR INSTALLATION DETAILS.

LEGEND

KEY PLAN

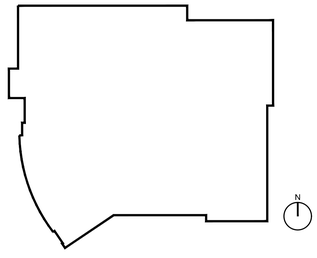

NOT FOR BID

SHA

ARCHITECT

Savely Healthcare Architects
ARCHITECTURE + PLANNING + DESIGN

18008 Sky Park Circle, Suite 290
Irvine, CA 92614
(949) 431-0071

PROJECT

ARROWHEAD REGIONAL MEDICAL CENTER
MEDICAL OFFICE BUILDING
400 N. PEPPER AVE.
COLTON, CALIFORNIA 92324

ONCOLOGY-AMBULATORY CLINIC

GOSS ENGINEERING
255 East Rincon St., Suite 301
Corona, CA 92879
P 951.340.1977 | F 951.340.1090
www.gossengineering.com

FILE NO.: 118-07-04

NO.	DATE	REVISIONS
(A)	09.12.2019	ADDENDUM 1

PROFESSIONAL SEALS

LICENSED ARCHITECT RICK SAVELY C-19030 EXP. EN. 09-30 STATE OF CALIFORNIA

REGISTERED PROFESSIONAL ENGINEER JOHN A. GOSS No. M36781 Exp. 3-31-20 MECHANICAL STATE OF CALIFORNIA

AGENCY APPROVAL

DRAWN BY	CHECKED BY	DATE
AEP	SAG	02.22.2019

PROJECT NUMBER
SHA # 18242.100

SHEET TITLE
MECHANICAL ROOF PLAN

SHEET NUMBER
M125

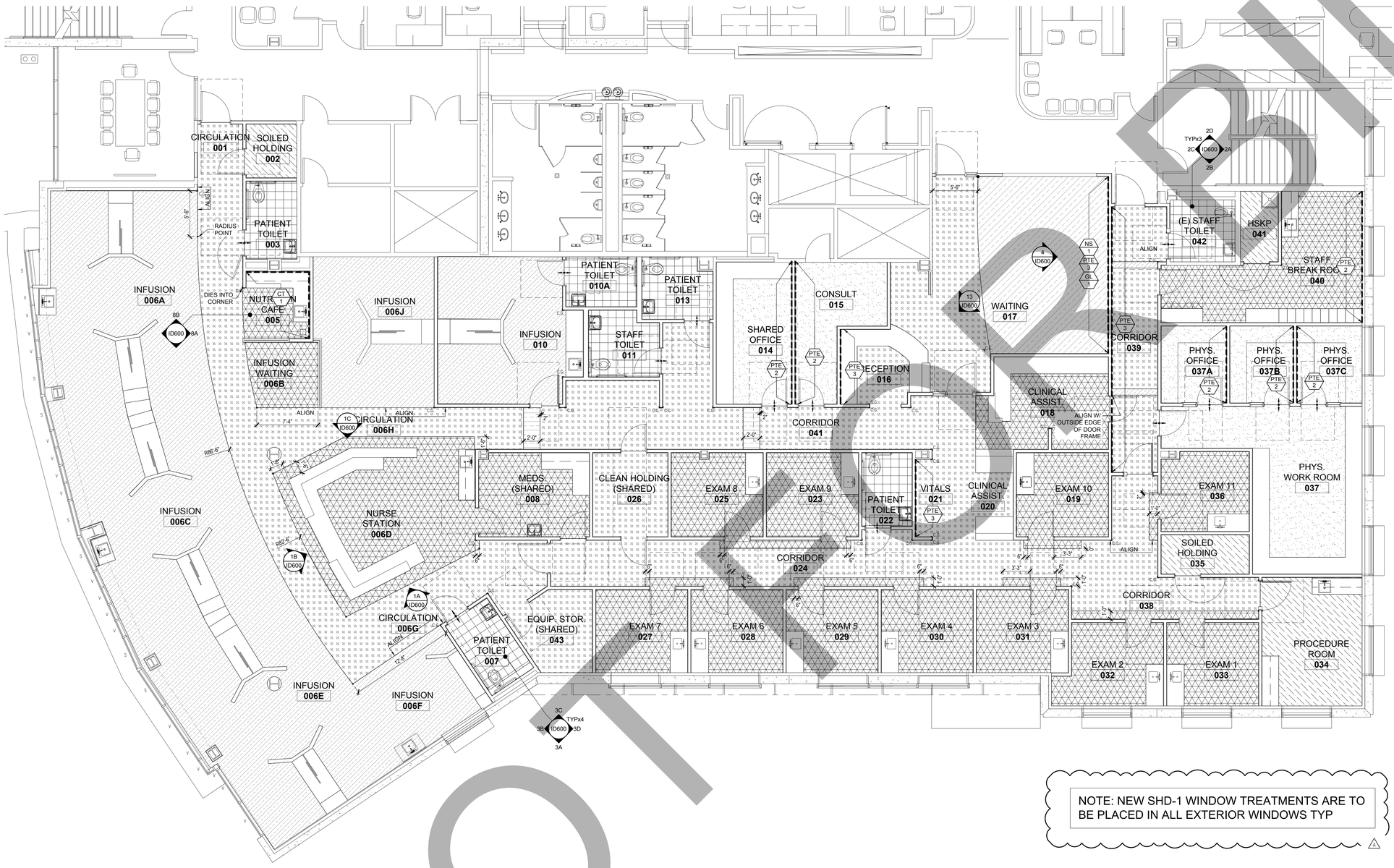

NOTE: NEW SHD-1 WINDOW TREATMENTS ARE TO BE PLACED IN ALL EXTERIOR WINDOWS TYP

FLOOR PATTERN AND ACCENT WALL FINISH PLAN 1
SCALE: 3/16" = 1'-0"

NOTE:
ALL MATERIALS NOTED ABOVE MAY NOT BE A PART OF THIS PROJECT.

CBC 1224.4.11.4 CEILING FINISHES
COMPLY WITH TABLE 1224.1 AS ILLUSTRATED IN ROOM FINISH SCHEDULE AND SECTION 0900
CEILING TO BE:
ACT-2: 2-SMOOTH AND EASILY CLEANABLE WITHOUT PERFORATIONS OF FISSURES
ACT-1: 3-PIN PERFORATED, FINE FISSURED, OR LIGHTLY TEXTURED

CBC 1224.4.11.1 FLOOR FINISHES
FLOOR FINISHES SHALL BE SMOOTH, WATERPROOF AND DURABLE

CBC 1224.4.11.2.1 WALL BASES.
MATERIALS. THE MATERIAL AND TEXTURES OF BASE AND THE INSTALLATION THERE OF SHALL BE SUCH AS TO MINIMIZE DUST CATCHING SURFACES, MOISTURE, INFILTRATION AND THE HARBORING OF VERMIN

CBC 1224.4.11.2.2 WET CLEANING.
FLOOR & WALL BASES IN OPERATING ROOMS, DELIVERY ROOMS, EMERGENCY OPERATING ROOMS, CAST ROOMS, INTERVENTIONAL ROOMS AND SPECIAL PROCEDURE ROOMS SHALL BE MONOLITHIC AND CONSTRUCTED WITHOUT JOINTS. THE FLOORS AND WALL BASES OF KITCHENS, SOILED AND CLEAN UTILITY ROOMS, HOUSEKEEPING ROOMS WITH MOP SINKS, PATIENT, PUBLIC AND STAFF SNAITARY FACILITIES AND OTHER AREAS SUBJECT TO FREQUENT WET CLEANING, SHALL ALSO BE HOMOGENEOUS, BUT MAY HAVE TIGHTLY SEALED JOINTS AND SHALL BE CONSTRUCTED WITHOUT VOIDS AT THE INTERSECTION OF FLOOR AND WALL SURFACES.

CBC 1224.4.11.3 WALL FINISHES. WALL FINISHES SHALL COMPLY WITH THE FOLLOWING REQUIREMENTS:
1. WALL FINISHES SHALL BE WASHABLE, IN THE VICINITY OF PLUMBING FIXTURES, WALL FINISHES SHALL BE SMOOTH, SCRUBBABLE AND WATER RESISTANT.
2. WALL FINISHES IN THE AREAS SUCH AS OPERATING ROOMS, DELIVERY ROOMS AND TRAUMA ROOMS SHALL BE MONOLITHIC, SCRUBBABLE AND ABLE TO WITHSTAND CLEANING WITH CHEMICALS.
3. WALL FINISHES IN OPERATING ROOMS, CESAREAN DELIVERY ROOMS, ISOLATION ROOMS AND STERILE PROCESSING ROOMS SHALL BE FREE OF FISSURES, OPEN JOINTS OR CREVICES THAT MAY RETQAIN OR PERMIT PASSAGE OF DIRT PARTICLES.
4. WALL FINISHES IN AREAS SUCH AS CLEAN CORRIDORS, CENTRAL STERILE SUPPLY SPACES, SPECIALIZED RADIOGRAPHIC ROOMS AND MINOR SURGICAL-PROCEDURE ROOMS SHALL BE WASHABLE, SMOOTH AND ABLE TO WITHSTAND CLEANING WITH CHEMICALS.
5. WALL AREAS PENETRATED BY PIPES, DUCTS AND CONDUITS SHALL BE TIGHTLY SEALED TO MINIMIZE ENTRY OF RODENTS AND INSECTS. JOINTS OF STRUCTURAL ELEMENTS SHALL BE SIMILARLY SEALED.
6. WALL FINISH REQUIREMENTS OF SECTION 1224.4.11.3 DO NOT APPLY TO BOILER ROOMS, MECHANICAL EQUIPMENT ROOMS, ADMINISTRATION DEPARTMENTS, OTHER OFFICES, ENCLOSED STAIRWAYS, MAINTENANCE SHOPS AND SIMILAR SPACES.

GENERAL NOTES

TS-1 RTF-1 RTF-2 RTF-3 CPT-1 LIN-1 PPT-1

FLOORING LEGEND

PLAN NORTH

LEGEND & ABBREVIATIONS

FINISH NOTES:

FINISH TAG, TYPICAL.
C.F.C.I. - CONTRACTOR FURNISHED, CONTRACTOR INSTALLED

1. SEE SPECIFICATIONS SECTION 09000 FOR FINISH SPECIFICATIONS.
2. A DASH (-) WITHIN A FINISH SCHEDULE CELL DENOTES NO FINISH REQUIRED.
3. ALL COUNTER TOPS AND SINKS MUST MEET ALL APPLICABLE CODE REQUIREMENTS.

FLOORING NOTES:

FLOORING TAG, TYPICAL.
C.F.C.I. - CONTRACTOR FURNISHED, CONTRACTOR INSTALLED

1. PATTERN FOR ROOMS WITH SINGLE FLOORING MATERIAL OMITTED FOR CLARITY. SEE FINISH SCHEDULE.
2. FLOORING MATERIAL REDUCER TO BE SCHLUTER SCHEINE WHERE NEEDED. COLOR AS SPECIFIED.
3. VINYL BACK CARPET TO HAVE CHEMICALLY WELDED SEAMS.
4. ALL RESILIENT FLOORING TO BE INSTALLED WITH MANUFACTURER RECOMMENDED ADHESIVE.
5. ADA THRESHOLD AT TOILET ROOMS TO BE SOLID SURFACE MATERIAL. SEE FINISH SPECIFICATIONS.
6. TILE FLOORING TRANSITIONS TO HAVE SCHLUTER ALUMINUM TRANSITION STRIPS.

FINISH AND FLOOR ABBREVIATIONS:

WALL BASE

CB	CARPET BASE
CTB	CERAMIC TILE BASE
PTB	PORCELAIN TILE BASE
QTB	QUARRY TILE BASE
RTS	RUBBER TOPSET BASE
SCB	SELF-COVE BASE

FLOOR

AFS	ACCESS FLOOR SYSTEM
CONC	SEALED CONCRETE
CPT	CARPET
CT	CERAMIC TILE
ERX	EPOXY
LIN	LINOLEUM
MAT	WALK OFF MATT
PPT	PORCELAIN PAVER TILE
QT	QUARRY TILE
RS	REDUCER STRIP
RTF	RESILIENT TILE FLOORING
RUB	RUBBER
SMV	SEAMLESS SHEET VINYL
TER	TERRAZZO
TS	TRANSITION STRIP
VCT	VINYL COMPOSITION TILE
WR	WELDING ROD

CEILING

ACT	ACOUSTICAL CEILING TILE
MC	METAL CEILING
PTF	PAINT FLAT FINISH
PTS	PAINT SEMI-GLOSS FINISH
TRN	CEILING TRANSPARENCY

WALL

CG	CORNER GUARD
CHR	CHAIR RAIL
CR	CRASH RAIL
CT	CERAMIC TILE
CTT	CERAMIC TILE TRIM
DFP	DOOR FRAME PROTECTOR
EPX	EPOXY PAINT
FWC	FABRIC WALLCOVERING
GL	GLASS
GT	GLASS TILE
HDR	HANDRAIL
HIC	HIGH IMPACT WALLCOVERING
LAM	PLASTIC LAMINATE
MLD	MOULDING
MUR	WALL MURAL
NS	NATURAL STONE
PPT	PORCELAIN TILE
PTE	PAINT EGGSHELL FINISH
PTS	PAINT SEMI-GLOSS FINISH
PTT	PORCELAIN TILE TRIM
RES	RESIN PANEL
RTT	RESIN TILE TRIM
SSM	SOLID SURFACE MATERIAL
TB	TACK BOARD
VWC	VINYL WALLCOVERING

CASEWORK FINISHES:

LAM	PLASTIC LAMINATE
NS	NATURAL STONE
QTZ	QUARTZ
SSM	SOLID SURFACE MATERIAL
WD	WOOD

MISCELLANEOUS:

AW	ARTWORK
BLD	BLINDS
CLM	COLUMN COVER
CUB	CUBICLE CURTAIN
DR	DOOR
FIX	LIGHT FIXTURE
FLM	WINDOW FILM
FPP	FOLDING OPERABLE PARTITION
LKR	LOCKER
MIR	MIRROR
MTL	METAL
MUR	MURAL
SGN	SIGNAGE
SHD	WINDOW TREATMENTS
SLT	SLAT WALL SYSTEM
SP	SHADE POCKET
SS	STAINLESS STEEL
STR	STAIR
TC	TOILET COMPARTMENT
WF	WATER FEATURE

NOTE:
ALL MATERIALS NOTED ABOVE MAY NOT BE A PART OF THIS PROJECT.

NOT FOR BID

SHA

ARCHITECT

Savely Healthcare Architects
ARCHITECTURE + PLANNING + DESIGN

18008 Sky Park Circle, Suite 290
Irvine, CA 92614
(949) 431-0071

PROJECT

ARROWHEAD REGIONAL MEDICAL CENTER
MEDICAL OFFICE BUILDING
400 N. PEPPER AVE.
COLTON, CALIFORNIA 92324

ONCOLOGY-AMBULATORY CLINIC

NO.	DATE	REVISIONS
1	09.12.2019	

PROFESSIONAL SEALS

LICENSED ARCHITECT RICK SAVELY C-19930 EXP. 09-30-20 STATE OF CALIFORNIA

AGENCY APPROVAL

DRAWN BY	CHECKED BY	DATE
EED	GL	02.22.2019

PROJECT NUMBER
SHA # 18242.100

SHEET TITLE

FLOOR PATTERN & ACCENT WALL FINISH PLAN

SHEET NUMBER

ID300

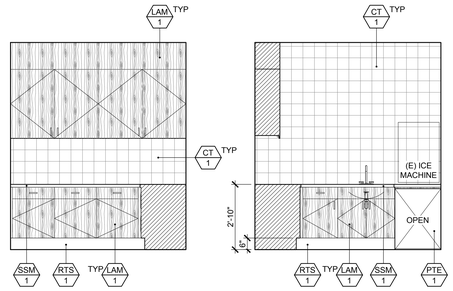

ELEVATIONS -NUTRITION CAFE 005 8
SCALE: 3/8"= 1'-0"

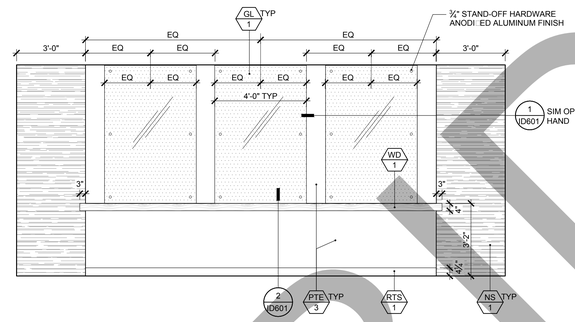

ELEVATION - WAITING 017 - FEATURE WALL 4
SCALE: 3/8"=1'-0"

NOT USED 16
SCALE:

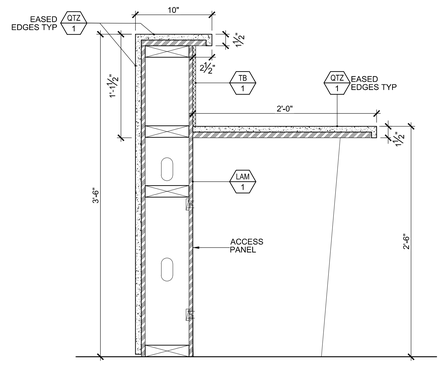

DETAIL - RECEPTION DESK 15
SCALE: 1-1/2" = 1'-0"

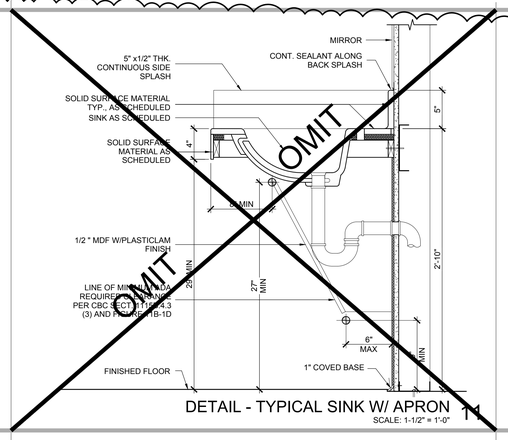

DETAIL - TYPICAL SINK W/ APRON 11
SCALE: 1-1/2" = 1'-0"

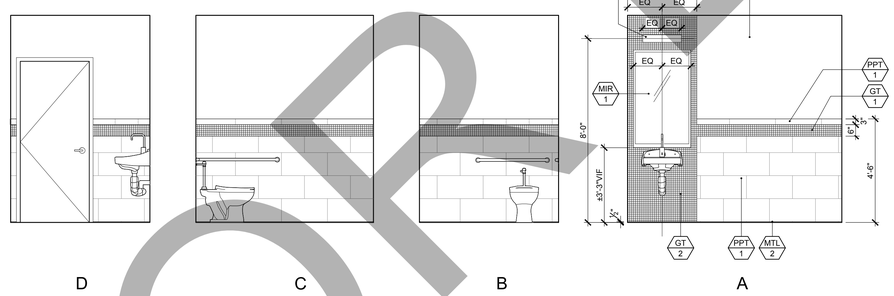

ELEVATION - TYPICAL STAFF TOILET 3
SCALE: 3/8" = 1'-0"

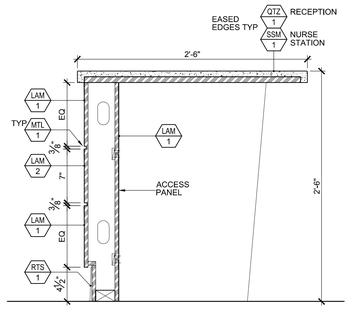

DETAIL - TYPICAL NURSE STATION/ RECEPTION DESK 14
SCALE: 1-1/2" = 1'-0"

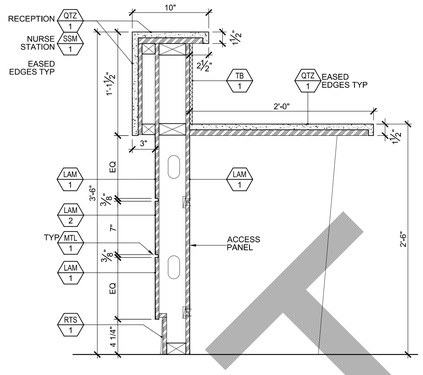

DETAIL - TYPICAL NURSE STATION/ RECEPTION DESK 10
SCALE: 1-1/2" = 1'-0"

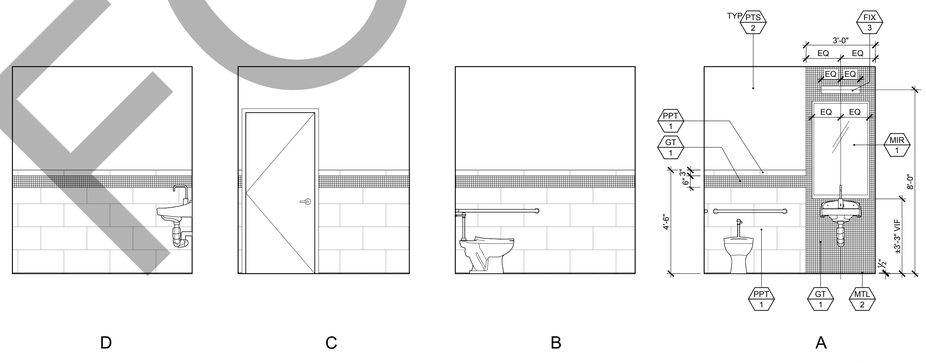

ELEVATION - TYPICAL PATIENT TOILET 2
SCALE: 3/8" = 1'-0"

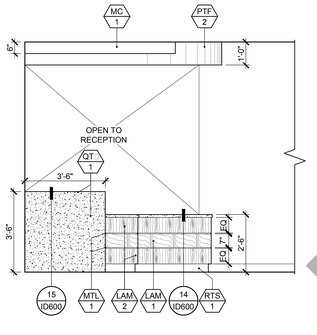

ELEVATION - RECEPTION 016 13
SCALE: 3/8" = 1'-0"

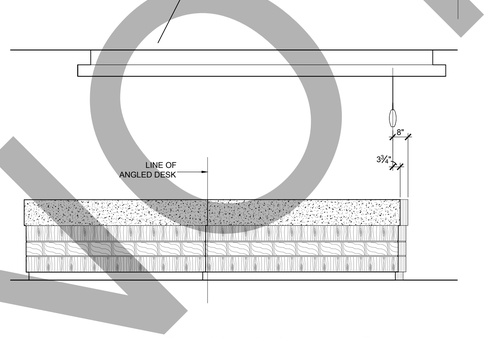

C - EXPANDED ELEVATION

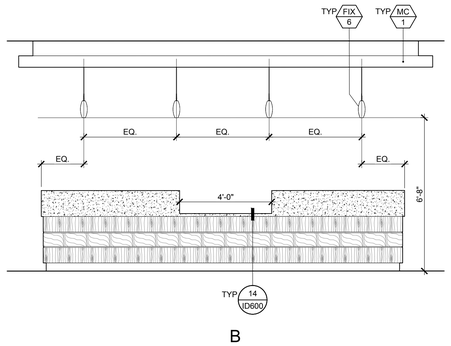

B

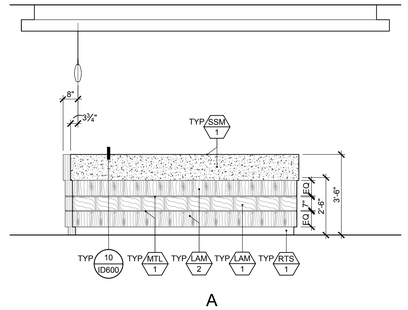

A

ELEVATIONS - NURSE STATION 006D 1
SCALE: 3/8" = 1'-0"

LEGEND □ ABBREVIATIONS

FINISH NOTES:

FINISH TAG, TYPICAL.
C.F.C.I. - CONTRACTOR FURNISHED, CONTRACTOR INSTALLED

1. SEE SPECIFICATIONS SECTION 09000 FOR FINISH SPECIFICATIONS.
2. A DASH (-) WITHIN A FINISH SCHEDULE CELL DENOTES NO FINISH REQUIRED.
3. ALL COUNTER TOPS AND SINKS MUST MEET ALL APPLICABLE CODE REQUIREMENTS.

FLOORING NOTES:

FLOORING TAG, TYPICAL.
C.F.C.I. - CONTRACTOR FURNISHED, CONTRACTOR INSTALLED

1. PATTERN FOR ROOMS WITH SINGLE FLOORING MATERIAL OMITTED FOR CLARITY. SEE FINISH SCHEDULE.
2. FLOORING MATERIAL REDUCER TO BE SCHLUTER SCHEINE WHERE NEEDED. COLOR AS SPECIFIED.
3. VINYL BACK CARPET TO HAVE CHEMICALLY WELDED SEAMS.
4. ALL RESILIENT FLOORING TO BE INSTALLED WITH MANUFACTURER RECOMMENDED ADHESIVE.
5. ADA THRESHOLD AT TOILET ROOMS TO BE SOLID SURFACE MATERIAL. SEE FINISH SPECIFICATIONS.
6. TILE FLOORING TRANSITIONS TO HAVE SCHLUTER ALUMINUM TRANSITION STRIPS.

FINISH AND FLOOR ABBREVIATIONS:

WALL BASE	
CB	CARPET BASE
CTB	CERAMIC TILE BASE
PTB	PORCELAIN TILE BASE
QTB	QUARRY TILE BASE
RTS	RUBBER TOPSET BASE
SCB	SELF-COVE BASE
FLOOR	
AFS	ACCESS FLOOR SYSTEM
CONC	SEALED CONCRETE
CPT	CARPET
CT	CERAMIC TILE
ERX	EPOXY
LIN	LINOLEUM
MAT	WALK OFF MATT
PPT	PORCELAIN PAVER TILE
QT	QUARRY TILE
RS	REDUCER STRIP
RTF	RESILIENT TILE FLOORING
RUB	RUBBER
SMV	SEAMLESS SHEET VINYL
TER	TERRA□O
TS	TRANSITION STRIP
VCT	VINYL COMPOSITION TILE
WR	WELDING ROD
CEILING	
ACT	ACOUSTICAL CEILING TILE
MC	METAL CEILING
PTF	PAINT FLAT FINISH
PTS	PAINT SEMI-GLOSS FINISH
TRN	CEILING TRANSPARENCY
WALL	
CG	CORNER GUARD
CHR	CHAIR RAIL
CR	CRASH RAIL
CT	CERAMIC TILE
CTT	CERAMIC TILE TRIM
DFP	DOOR FRAME PROTECTOR
EPX	EPOXY PAINT
FWC	FABRIC WALLCOVERING
GL	GLASS
GT	GLASS TILE
HDR	HANDRAIL
HIC	HIGH IMPACT WALLCOVERING
LAM	PLASTIC LAMINATE
MLD	MOULDING
MUR	WALL MURAL
NS	NATURAL STONE
PPT	PORCELAIN TILE
PTE	PAINT EGGSHELL FINISH
PTS	PAINT SEMI-GLOSS FINISH
PTT	PORCELAIN TILE TRIM
RES	RESIN PANEL
RTT	RESIN TILE TRIM
SSM	SOLID SURFACE MATERIAL
TB	TACK BOARD
VWC	VINYL WALLCOVERING
CASEWORK FINISHES:	
LAM	PLASTIC LAMINATE
NS	NATURAL STONE
QT	QUART□
SSM	SOLID SURFACE MATERIAL
WD	WOOD
MISCELLANEOUS:	
AW	ARTWORK
BLD	BLINDS
CLM	COLUMN COVER
CUB	CUBICLE CURTAIN
DR	DOOR
FIX	LIGHT FIXTURE
FLM	WINDOW FILM
FPP	FOLDING OPERABLE PARTITION
LKR	LOCKER
MIR	MIRROR
MTL	METAL
MUR	MURAL
SGN	SIGNAGE
SHD	WINDOW TREATMENTS
SLT	SLAT WALL SYSTEM
SP	SHADE POCKET
SS	STAINLESS STEEL
STR	STAIR
TC	TOILET COMPARTMENT
WF	WATER FEATURE

NOTE:
ALL MATERIALS NOTED ABOVE MAY NOT BE A PART OF THIS PROJECT.

PLAN NORTH

NOT FOR BID

SHA

ARCHITECT

Savely Healthcare Architects
ARCHITECTURE + PLANNING + DESIGN

18008 Sky Park Circle, Suite 290
Irvine, CA 92614
(949) 431-0071

PROJECT

ARROWHEAD REGIONAL MEDICAL CENT
MEDICAL OFFICE BUILDING
400 N. PEPPER AVE.
COLTON, CALIFORNIA 92324

ONCOLOGY-AMBULATORY CLINIC

NO.	DATE	REVISIONS
1	09.12.2019	

PROFESSIONAL SEALS

AGENCY APPROVAL

DRAWN BY	CHECKED BY	DATE
EED	GL	02.22.2019

PROJECT NUMBER
SHA # 18242.100

SHEET TITLE

INTERIOR ELEVATIONS
□ DETAILS

SHEET NUMBER

ID600

INTERIOR ROOM FINISH SCHEDULE

		FLOOR			WALLS				WAINSCOT		CEILING		CASEWORK		
ROOM #	ROOM NAME	FIELD	ACCENT	BASE	N	E	S	W	HEIGHT	FINISH	SOFFIT	CEILING	COUNTER TOP	FACE OF CABINET	NOTES
001	CIRCULATION	RTF-1	-	RTS-1	PTE-1	PTE-1	PTE-1	PTE-1	36"	HIC-1	PTF-2	-	-	-	FIX-1, CHR-1. CG-1
002	SOILED UTILITY	LIN-1	-	SCB-1	PTS-1	PTS-1	PTS-1	PTS-1	54"	HIC-3	-	PTS-3			-
003	PATIENT TOILET	PPT-2	-	PPT-1	PTS-2	PTS-2	PTS-2	PTS-2	54"	PPT-1	-	PTS-3	~~SSM-1~~ A	-	FIX-3, FIX-4, MTL-2, MIR-1, GT-1, ~~LAM-3~~ ~~SINK APRON~~ A
005	NUTRITION CAFE	RTF-2	-	RTS-1	CT-1	CT-1	PTE-1	PTE-1	-	-	-	-	SSM-1	LAM-1	FIX-1, CT-1 □ BACK SPLASH, GL-1
006A	INFUSION	RTF-3	-	RTS-1	PTE-1	PTE-1	PTE-1	PTE-1	36"	HIC-1, 2	ACT-2, PTF-2	-	SSM-1	LAM-1	FIX-7, SSM-1 □ LOW WALL CAP, SHD-1, CUB-1, CHR-1, RES-1, DOWNLIGHTS PER ARCHITECTURAL SPECS.
006B	INFUSION WAITING	RTF-2	-	RTS-1	PTE-1	PTE-1	PTE-1	PTE-1	-	-	MC-1	-	-	-	FIX-7, GL-1, SSM-1 □ LOW WALL CAP
006C	INFUSION	RTF-3	-	RTS-1	PTE-1	PTE-1	PTE-1	PTE-1	36"	HIC-1, 2	ACT-2, PTF-2	-	SSM-1 A	LAM-1	FIX-7, SSM-1 □ LOW WALL CAP, SHD-1, CUB-1, CHR-1, RES-1, DOWNLIGHTS PER ARCHITECTURAL SPECS.
006D	NURSE STATION	RTF-2	-	RTS-1	PTE-1	PTE-1	PTE-1	PTE-1	36"	HIC-1	MC-1	-	SSM-1	LAM-1, 2	FIX-5, FIX-6, FIX-7, TB-1, MTL-1
006E	INFUSION	RTF-3	-	RTS-1	PTE-1	PTE-1	PTE-1	PTE-1	36"	HIC-1, 2	ACT-2, PTF-2	-	SSM-1	LAM-1	FIX-7, SSM-1 □ LOW WALL CAP, SHD-1, CUB-1, CHR-1, RES-1, DOWNLIGHTS PER ARCHITECTURAL SPECS.
006F	INFUSION	RTF-3	-	RTS-1	PTE-1	PTE-1	PTE-1	PTE-1	36"	HIC-1, 2	ACT-2, PTF-2	-	SSM-1	LAM-1	FIX-7, SSM-1 □ LOW WALL CAP, SHD-1, CUB-1, CHR-1, RES-1, DOWNLIGHTS PER ARCHITECTURAL SPECS.
006G	CIRCULATION	RTF-1	-	RTS-1	PTE-1	PTE-1	PTE-1	PTE-1	36"	HIC-1	PTF-2, MC-1	-	-	-	FIX-1, CG-1
006H	CIRCULATION	RTF-1	-	RTS-1	PTE-1	PTE-1	PTE-1	PTE-1	36"	HIC-1	PTF-2. MC-1	-	-	-	FIX-1, CG-1
006J	INFUSION	RTF-3	-	RTS-1	PTE-1	PTE-1	PTE-1	PTE-1	36"	HIC-1, 2	ACT-2	-	SSM-1 A	LAM-1	FIX-7, SSM-1 □ LOW WALL CAP, CUB-1, CHR-1, RES-1, DOWNLIGHTS PER ARCHITECTURAL SPECS.
007	PATIENT TOILET	PPT-2	-	PPT-1	PTS-2	PTS-2	PTS-2	PTS-2	54"	PPT-1	-	PTS-3	~~SSM-1~~ A	-	FIX-3, FIX-4, MTL-2, MIR-1, GT-1, ~~LAM-3~~ ~~SINK APRON~~ A
008	MEDS (SHARED)	RTF-2	-	RTS-1	PTE-1	PTE-1	PTE-1	PTE-1	-	-	-	-	SSM-1	LAM-1	FIX-1
010	INFUSION	RTF-3	-	RTS-1	PTE-1	PTE-1	PTE-1	PTE-1	36"	HIC-1, 2	PTF-1	-	SSM-1 A	LAM-1	FIX-1, CHR-1, CG-1, CUB-1, RES-1, DOWNLIGHTS PER ARCHITECTURAL SPECS.
010A	PATIENT TOILET	PPT-2	-	PPT-1	PTS-2	PTS-2	PTS-2	PTS-2	54"	PPT-1	-	PTS-3	~~SSM-1~~	-	FIX-3, FIX-4, MTL-2, MIR-1, GT-1, ~~LAM-3~~ ~~SINK APRON~~ A
011	STAFF TOILET	PPT-2	-	PPT-1	PTS-2	PTS-2	PTS-2	PTS-2	54"	PPT-1	-	PTS-3	~~SSM-1~~	-	FIX-3, FIX-4, MTL-2, MIR-1, GT-1, ~~LAM-3~~ ~~SINK APRON~~
013	PATIENT TOILET	PPT-2	-	PPT-1	PTS-2	PTS-2	PTS-2	PTS-2	54"	PPT-1	-	PTS-3	~~SSM-1~~	-	FIX-3, FIX-4, MTL-2, MIR-1, GT-1, ~~LAM-3~~ ~~SINK APRON~~
014	SHARED OFFICE	CPT-1	-	RTS-2	PTE-1	PTE-2	PTE-1	PTE-1	-	-	PTF-1	-	SSM-1	LAM-1	FIX-1, FIX-5, TB-1
015	CONSULT	CPT-1	-	RTS-2	PTE-1	PTE-1	PTE-1	PTE-2	-	-	-	-	-	-	FIX-1
016	RECEPTION	RTF-1	-	RTS-1	PTE-1	PTE-1	PTE-1	PTE-3	-	-	MC-1, PTF-2	-	QT□-1	LAM-1, 2	FIX-7, FIX-2, TB-1, MTL-1
017	WAITING	RTF-3	RTF-1	RTS-1	PTE-1	PTE-3, NS-1 GL-1	PTE-1	PTE-1	-	-	PTF-1, MC-1	-	-	-	FIX-2. FIX-7, RES-1, WD-1
0018	CLINICAL ASSIST	RTF-2	-	RTS-1	PTE-1	PTE-1	PTE-1	PTE-1	-	-	PTF-1, MC-1	-	QT□-1	LAM-1	FIX-1, FIX-5, FIX-6, TB-1, MTL-1, CG-1
0019	EXAM 10	RTF-2	-	RTS-1	PTE-1	PTE-1	PTE-1	PTE-1	36"	HIC-1	-	-	SSM-1	LAM-1	FIX-1, SHD-1, CHR-1
020	CLINICAL ASSIST	RTF-1	-	RTS-1	PTE-1	PTE-1	PTE-1	PTE-1	-	-	-	-	QT□-1	LAM-1	FIX-1, FIX-5, FIX-6, TB-1, MTL-1
021	VITALS	RTF-1	-	RTS-1	PTE-1	PTE-1	PTE-1	PTE-3	-	-	-	-	-	-	FIX-1, CG-1
022	PATIENT TOILET	PPT-2	-	PPT-1	PTS-2	PTS-2	PTS-2	PTS-2	54"	PPT-1	-	PTS-3	~~SSM-1~~ A	-	FIX-3, FIX-4, MTL-2, MIR-1, GT-1, ~~LAM-3~~ ~~SINK APRON~~ A
023	EXAM 9	RTF-2	-	RTS-1	PTE-1	PTE-1	PTE-1	PTE-1	36"	HIC-1	-	-	SSM-1	LAM-1	FIX-1, CHR-1
024	CORRIDOR	RTF-1	RTF-2	RTS-1	PTE-1	PTE-1	PTE-1	PTE-1	36"	HIC-1	MC-1	-	-	-	FIX-1, CHR-1, CG-1
025	EXAM 8	RTF-2	-	RTS-1	PTE-1	PTE-1	PTE-1	PTE-1	36"	HIC-1	-	-	SSM-1	LAM-1	FIX-1, CHR-1
026	CLEAN UTILITY (SHARED)	RTF-1	-	RTS-1	HIC-2	HIC-2	HIC-2	HIC-2	-	-	-	-	-	-	FIX-1
027	EXAM 7	RTF-2	-	RTS-1	PTE-1	PTE-1	PTE-1	PTE-1	36"	HIC-1	-	-	SSM-1	LAM-1	FIX-1, CHR-1, SHD-1
028	EXAM 6	RTF-2	-	RTS-1	PTE-1	PTE-1	PTE-1	PTE-1	36"	HIC-1	-	-	SSM-1	LAM-1	FIX-1, SHD-1, CHR-1
029	EXAM 5	RTF-2	-	RTS-1	PTE-1	PTE-1	PTE-1	PTE-1	36"	HIC-1	-	-	SSM-1	LAM-1	FIX-1, CHR-1, SHD-1
030	EXAM 4	RTF-2	-	RTS-1	PTE-1	PTE-1	PTE-1	PTE-1	36"	HIC-1	-	-	SSM-1	LAM-1	FIX-1, SHD-1, CHR-1
031	EXAM 3	RTF-2	-	RTS-1	PTE-1	PTE-1	PTE-1	PTE-1	36"	HIC-1	-	-	SSM-1	LAM-1	FIX-1, SHD-1, CHR-1
032	EXAM 2	RTF-2	-	RTS-1	PTE-1	PTE-1	PTE-1	PTE-1	36"	HIC-1	-	-	SSM-1	LAM-1	FIX-1, CHR-1, SHD-1
033	EXAM 1	RTF-2	-	RTS-1	PTE-1	PTE-1	PTE-1	PTE-1	36"	HIC-1	-	-	SSM-1	LAM-1	FIX-1, SHD-1, CHR-1
034	PROCEDURE ROOM	LIN-1	-	RTS-1	PTE-1	PTE-1	PTE-1	PTE-1	36"	HIC-1	-	PTS-3	SSM-1	LAM-1	FIX-1, SHD-1, CHR-1
035	SOILED UTILITY	LIN-1	-	SCB-1	PTS-1	PTS-1	PTS-1	PTS-1	54"	HIC-3	-	PTS-3	-	-	FIX-1
036	EXAM 11	RTF-2	-	RTS-1	PTE-1	PTE-1	PTE-1	PTE-1	36"	HIC-1	-	-	SSM-1	LAM-1	FIX-1, CHR-1
037	PHYS WORK ROOM	CPT-1	-	RTS-2	PTE-1	PTE-1	PTE-1	PTE-1	-	-	-	-	SSM-1	LAM-1	FIX-1, FIX-5, TB-1, SHD-1
037A	PHYS OFFICE	CPT-1	-	RTS-2	PTE-1	PTE-2	PTE-1	PTE-1	-	-	-	-	-	-	FIX-1
037B	PHYS OFFICE	CPT-1	-	RTS-2	PTE-1	PTE-2	PTE-1	PTE-1	-	-	-	-	-	-	FIX-1
037C	PHYS OFFICE	CPT-1	-	RTS-2	PTE-1	PTE-1	PTE-1	PTE-2	-	-	-	-	-	-	FIX-1, SHD-1
038	CORRIDOR	RTF-1	RTF-2	RTS-1	PTE-1	PTE-1	PTE-1	PTE-1	36"	HIC-1	-	-	-	-	FIX-1, CHR-1, CG-1
039	CORRIDOR	RTF-1	RTF-3	RTS-1	PTE-1	PTE-1	PTE-1	PTE-3	-	-	-	-	-	-	FIX-1
040	STAFF BREAK ROOM	RTF-2	-	RTS-1	PTE-1	PTE-2	PTE-1	PTE-1	-	-	-	-	SSM-1	LAM-1	FIX-1, SHD-1, LKR-1
041	HSKP	LIN-1	-	SCB-1	PTS-1	PTS-1	PTS-1	PTS-1	54"	HIC-3	-	PTS-3	-	-	PROVIDE MOP RACK
041	CORRIDOR	RTF-1	RTF-2	RTS-1	PTE-1	PTE-1	PTE-1	PTE-1	36"	HIC-1	MC-1	-		-	FIX-1, CHR-1, CG-1
042	(E) STAFF TOILET	PPT-2	-	PPT-1	PTS-2	PTS-2	PTS-2	PTS-2	54"	PPT-1	-	PTS-3	~~SSM-1~~ A	-	FIX-3, FIX-4, MTL-2, MIR-1, GT-1, ~~LAM-3~~ ~~SINK APRON~~ A
043	EQUIP. STOR (SHARED)	RTF-1	-	RTS-1	HIC-3	HIC-3	HIC-3	HIC-3	-	-	-	-	-	-	FIX-1

Plea□e c□□rdinate □r□□er Ceilin□ Material□ □er CBC 1226.4.7.4 / 1224.4.11.4 and Ta□le 1224.4.11 - Per Ta□le 1224.4.11 Clinic Ceilin□□in Treat□ent r□□□ □Ceilin□#2 - □u□t □e □□ □□t□ and ea□ily cleana□le □it□□ut □er□rati□n□ □r i□□ure□- c□□rdinate □it□ Arc□itect l□cati□n □□□uc□ ceilin□ re□uire□ent□- T□ere i□a very lar□e Treat□ent area and r□□□ □.

LEGEND □ ABBREVIATIONS

FINISH NOTES:

FINISH TAG, TYPICAL.
C.F.C.I. - CONTRACTOR FURNISHED, CONTRACTOR INSTALLED

1. SEE SPECIFICATIONS SECTION 09000 FOR FINISH SPECIFICATIONS.
2. A DASH (-) WITHIN A FINISH SCHEDULE CELL DENOTES NO FINISH REQUIRED.
3. ALL COUNTER TOPS AND SINKS MUST MEET ALL APPLICABLE CODE REQUIREMENTS.

FLOORING NOTES:

FLOORING TAG, TYPICAL.
C.F.C.I. - CONTRACTOR FURNISHED, CONTRACTOR INSTALLED

1. PATTERN FOR ROOMS WITH SINGLE FLOORING MATERIAL OMITTED FOR CLARITY. SEE FINISH SCHEDULE.
2. FLOORING MATERIAL REDUCER TO BE SCHLUTER SCHEINE WHERE NEEDED. COLOR AS SPECIFIED.
3. VINYL BACK CARPET TO HAVE CHEMICALLY WELDED SEAMS.
4. ALL RESILIENT FLOORING TO BE INSTALLED WITH MANUFACTURER RECOMMENDED ADHESIVE.
5. ADA THRESHOLD AT TOILET ROOMS TO BE SOLID SURFACE MATERIAL. SEE FINISH SPECIFICATIONS.
6. TILE FLOORING TRANSITIONS TO HAVE SCHLUTER ALUMINUM TRANSITION STRIPS.

FINISH AND FLOOR ABBREVIATIONS:

WALL BASE
CB CARPET BASE
CTB CERAMIC TILE BASE
PTB PORCELAIN TILE BASE
QTB QUARRY TILE BASE
RTS RUBBER TOPSET BASE
SCB SELF-COVE BASE

FLOOR
AFS ACCESS FLOOR SYSTEM
CONC SEALED CONCRETE
CPT CARPET
CT CERAMIC TILE
ERX EPOXY
LIN LINOLEUM
MAT WALK OFF MATT
PPT PORCELAIN PAVER TILE
QT QUARRY TILE
RS REDUCER STRIP
RTF RESILIENT TILE FLOORING
RUB RUBBER
SMV SEAMLESS SHEET VINYL
TER TERRA□O
TS TRANSITION STRIP
VCT VINYL COMPOSITION TILE
WR WELDING ROD

CEILING
ACT ACOUSTICAL CEILING TILE
MC METAL CEILING
PTF PAINT FLAT FINISH
PTS PAINT SEMI-GLOSS FINISH
TRN CEILING TRANSPARENCY

WALL
CG CORNER GUARD
CHR CHAIR RAIL
CR CRASH RAIL
CT CERAMIC TILE
CTT CERAMIC TILE TRIM
DFP DOOR FRAME PROTECTOR
EPX EPOXY PAINT
FWC FABRIC WALLCOVERING
GL GLASS
GT GLASS TILE
HDR HANDRAIL
HIC HIGH IMPACT WALLCOVERING
LAM PLASTIC LAMINATE
MLD MOULDING
MUR WALL MURAL
NS NATURAL STONE
PPT PORCELAIN TILE
PTE PAINT EGGSHELL FINISH
PTS PAINT SEMI-GLOSS FINISH
PTT PORCELAIN TILE TRIM
RES RESIN PANEL
RTT RESIN TILE TRIM
SSM SOLID SURFACE MATERIAL
TB TACK BOARD
VWC VINYL WALLCOVERING

CASEWORK FINISHES:
LAM PLASTIC LAMINATE
NS NATURAL STONE
QT□ QUART□
SSM SOLID SURFACE MATERIAL
WD WOOD

MISCELLANEOUS:
AW ARTWORK
BLD BLINDS
CLM COLUMN COVER
CUB CUBICLE CURTAIN
DR DOOR
FIX LIGHT FIXTURE
FLM WINDOW FILM
FPP FOLDING OPERABLE PARTITION
LKR LOCKER
MIR MIRROR
MTL METAL
MUR MURAL
SGN SIGNAGE
SHD WINDOW TREATMENTS
SLT SLAT WALL SYSTEM
SP SHADE POCKET
SS STAINLESS STEEL
STR STAIR
TC TOILET COMPARTMENT
WF WATER FEATURE

NOTE:
ALL MATERIALS NOTED ABOVE MAY NOT BE A PART OF THIS PROJECT.

PLAN NORTH

ARCHITECT

Savely Healthcare Architects
ARCHITECTURE + PLANNING + DESIGN

18008 Sky Park Circle, Suite 290
Irvine, CA 92614
(949) 431-0071

PROJECT

ARROWHEAD REGIONAL MEDICAL CENT
MEDICAL OFFICE BUILDING
400 N. PEPPER AVE.
COLTON, CALIFORNIA 92324

ONCOLOGY-AMBULATORY CLINIC

NO.	DATE	REVISIONS
1	09.12.2019	

PROFESSIONAL SEALS

LICENSED ARCHITECT RICK SAVELY C-19030 SIGN. 09-30-19 STATE OF CALIFORNIA

AGENCY APPROVAL

DRAWN BY	CHECKED BY	DATE
EED	GL	02.22.2019

PROJECT NUMBER
SHA # 18242.100

SHEET TITLE
INTERIOR ROOM FINISH SCHEDULE

SHEET NUMBER
ID700

NOT FOR BID

TABLE OF CONTENTS

DIVISION 1 - GENERAL REQUIREMENTS

01 10 00 SUMMARY

01 25 00 CONTRACT MODIFICATION PROCEDURES

01 29 00 PAYMENT PROCEDURES

01 31 00 PROJECT MANAGEMENT AND COORDINATION

01 31 50 MECHANICAL AND ELECTRICAL COORDINATION

01 32 00 CONSTRUCTION PROGRESS DOCUMENTATION

01 33 00 SUBMITTAL PROCEDURES

01 40 00 QUALITY REQUIREMENTS

01 42 00 REFERENCES

01 45 80 TESTING LABORATORY SERVICES

01 50 00 TEMPORARY FACILITIES AND CONTROLS

01 60 00 PRODUCT REQUIREMENTS

01 64 00 DELIVERY, STORAGE AND HANDLING

01 65 00 OWNER FURNISHED PRODUCTS

A 01 70 00 EXECUTION REQUIREMENTS

01 73 10 CUTTING AND PATCHING

01 77 00 CLOSEOUT PROCEDURES

01 78 10 PROJECT RECORD DOCUMENTS

01 78 20 .....OPERATION AND MAINTENANCE DATA

01 82 00 .....DEMONSTRATION AND TRAINING

NOT FOR BID

08 71 00 DOOR HARDWARE

08 71 13 AUTOMATIC DOOR OPERATORS

08 80 00 GLAZING

08 84 13 DECORATIVE PLASTIC GLAZING

DIVISION 9 - FINISHES

09 00 00 FINISH MATERIAL LEGEND

09 22 16 NON STURCTURAL METAL FRAMING

09 22 26 METAL SUPENSION SYSTEM

09 28 00 BACKING BOARD AND UNDERLAYMENT

09 29 00 GYPSUM BOARD

09 30 00 TILING

09 51 00 ACOUSTICAL PANEL CEILINGS

09 54 23 LINEAR METAL CEILINGS

09 65 13 RESILIENT WALL BASE AND ACCESSORIES

09 65 16 RESILIENT SHEET FLOORING

09 65 19 RESILIENT TILE FLOORING

A 09 68 16 SHEET CARPETING

09 81 00 ACOUSTICAL INSULATION

09 91 00 PAINTING

DIVISION 10 - SPECIALTIES

10 11 23 TACKBOARDS

10 14 00 SIGNAGE

10 21 23 CUBICLE CURTAINS AND TRACK

10 26 23 WALL AND CORNER PROTECTION

NOT FOR BID

10 28 13 TOILET ACCESSORIES

A 10 44 00 FIRE PROTECTION SPECIALTIES

10 50 60 PLASTIC LAMINATE FACED WOOD LOCKERS

DIVISION 11 - EQUIPMENT

Not Used

DIVISION 12 - FURNISHINGS

Window treatments to match building standard

DIVISION 13 - SPECIAL CONSTRUCTION

Not used

DIVISION 14 - CONVEYING SYSTEMS

Not Used

DIVISION 21 – FIRE PROTECTION

A 21 05 02 BASIC FIRE SUPRESSION REQUIREMENTS

21 06 02 BASIC FIRE SUPPRESSION MATERIALS AND METHODS

21 13 00 FIRE SUPPRESSION SYSTEMS

DIVISION 22 – PLUMBING

22 05 02 BASIC PLUMBING REQUIREMENTS

22 05 03 BASIC PLUMBING MATERIALS AND METHODS

22 05 23 GENERAL DUTY VALVES FOR PLUMBING PIPING

22 05 29 HANGERS AND SUPPORTS FOR PLUMBING PIPING

22 05 53 PLUMBING IDENTIFICATION

22 07 00 PLUMBING INSULATION

22 10 00 PLUMBING PIPING

NOT FOR BID

SECTION 01 65 00

OWNER FURNISHED PRODUCTS

PART 1 - GENERAL

1.1 RELATED DOCUMENTS

A. Drawings and general provisions of the GMAX Agreement, including Supplementary Conditions and Division 1 Specification Sections apply to this Section.

B. Medical Equipment Specifications, Project Manual Volumes 6 through 9.

C. Related Sections:
   1. Refer to Section 09 11 00 – Non-Load Bearing Metal Framing

1.2 SUMMARY

A. Work Includes: Furnish all labor, materials, equipment, appliances and necessary incidentals for the complete installation of all Owner furnished products as shown on the Drawings and as specified herein.

B. This Section describes the requirements for furnishing and installing Owner furnished equipment, and providing miscellaneous items and accessories for a complete, functioning installation.

C. This Section describes certain terms and abbreviations utilized in the Contract Documents.

1.3 PRODUCT HANDLING

A. Protection: Use necessary means and methods to protect the materials of this Section before, during, and after installation. Protect the installed Work and materials of other trades and equipment installed by others.

B. Replacements: In the event of damage, immediately repair all damaged and defective work to the approval of the Architect, at no additional cost to the Owner.

PART 2 - PRODUCTS

2.1 GENERAL

A. Refer to the Contract Documents. A

   1. Verify mounting and utility requirements for accepted equipment items.

   2. Provide mounting and utility rough-ins for equipment items required regardless of equipment responsibility.

      a. Rough-in locations, sizes, capacities and similar type shall be as indicated and required by produce manufacturers.

NOT FOR BID

b. If the Owner substitutes items similar to those scheduled there shall be no change in rough-in cost, unless substitution occurs after rough-in has been completed or rough-in involves other mounting requirements, utilities of different capacity than those required by item originally specified.

3. For items designated to be Owner or Vendor Furnished: The Owner or Vendor will furnish manufacturer's literature or information, shop drawings, or appropriate information for preparing required shop drawings.

B. Approved manufacturer's printed descriptions, specifications and recommendations shall govern the Work, unless specifically indicated otherwise.

C. Specifications, standards, tests and recommended methods cited in this Section to govern use of items of equipment shall also govern item's component parts.

D. Mechanical and plumbing work shall comply with governing Codes and standards and requirements of Division 15 - Mechanical.

E. Electrical work shall comply with governing Codes and standards and applicable requirements of Division 16 - Electrical.

2.2 RESPONSIBILITY REQUIREMENTS:

A. Refer to the Contract Documents. A

B. Responsibility for equipment installation:

1. Furnished by the Contractor; installed by the Contractor.

a. General: Refer to equipment items specified in other Sections for additional information.

b. Provide and install backing for all items which weigh 20 pounds or more. Refer to Section 09110 – Non-Load Bearing Metal Framing and the Drawings.

2. Furnished by the Owner; installed by the Contractor.

a. General: The Contractor shall coordinate delivery of Owner furnished equipment. The Owner will furnish equipment to coincide with the construction schedule.

b. The Owner will:

1) Furnish standard integral parts of equipment.

2) Deliver items to site.

c. The Contractor will:

1) Receive items at site and give written receipt for item at time of delivery, noting visible defects and omissions; if such declaration is not given, the Contractor shall assume responsibility for such defects and omissions.

2) Store items until ready for installation and protect from loss and damage.

NOT FOR BID

b. Heavy drawers, full extension, 150 lb. capacity: Accuride AC4034 Series.

c. Shallow drawers, full extension, low profile, 45 lb. capacity: Accuride 2006 undercounter slides

d. File drawers, full extension, 150 lb. capacity: Accuride C4034

4. Retracting door hardware: Accuride Anti-Rak Flipper Door Slides, vertical retracting slide with hinge carrier strip and extra hinge; one hinge per foot of door height.

5. Television Swivel Mount: Lucasey Model F2030T.

A

8. Door and drawer pulls: Wire rod type, satin chrome plated steel, 4-inch centers, Stanley SH4484-26D, or approved equivalent.

9. Drawer stops: Provide stops to prevent drawer fronts from hitting face of cabinet body.

10. Sliding door slides: KV2412.

11. Sliding door pulls: Grant 428.

12. File folder supports: As suitable for Pendaflex file folders, chrome plated.

13. Cabinet drawer/door locks: National C8123 or Corbin 0737, pin tumbler operation, re-keyable and capable of being masterkeyed. Wafer tumbler locks will not be acceptable.

a. Provide locks at drawers, single doors and on active leaf of paired doors, as indicated on the Drawings.

b. Provide 2 keys for each lock.

c. Coordinate locks and latches specified below. At pairs of doors, active leaf shall have lock and inactive leaf shall have elbow catch.

d. Keying: Assist Construction Manager and Owner with developing a key schedule for drawer locks when shop drawings are reviewed. Coordinate with keying requirements specified in Section 08710 - Door Hardware.

e. Keying groups: Interior elevations in the Drawings indicate the following keying groups for reference only. Unless otherwise directed by Owner through Construction Manager, these groups shall be used:

14. Elbow catches: Ives 2F15. Coordinate locks and latches specified below. At pairs of doors, active leaf shall have lock and inactive leaf shall have elbow catch.

15. Magnetic catches: Provide magnetic catches at all doors with locks and all doors without elbow catches, EPCO 1001 or equivalent.

NOT FOR BID

SECTION 09 00 00
FINISH MATERIAL LEGEND
(Partial List)

PART 1 GENERAL

1.1 SUMMARY

A. Section includes: Finish material/colors legend

1.2 MANUFACTURED CASEWORK

A. Plastic Laminate Faced Casework (SECTION 06 41 00 - ARCHITECTURAL WOOD CABINETS)

LAM-1	Manufacturer:	Wilsonart/EB Bradley
	Contact:	Eileen Capelle (323) 559-3070
	Pattern:	Brazilwood
	Color:	7946-38
	Finish:	Fine Velvet Finish
	Location:	Reception, Nurse Station casework, Door Stain
	Note:	Provide fire-rated substrate and adhesive to maintain or obtain Class A fire rating where required by Code. Provide radius-exposed outside edges at countertop.
LAM-2	Manufacturer:	Wilsonart/EB Bradley
	Contact:	Eileen Capelle (323) 559-3070
	Pattern:	Beigewood
	Color:	7850-60
	Finish:	Matte
	Location:	Reception, Nurse Station casework, Door Stain
	Note:	Provide fire-rated substrate and adhesive to maintain or obtain Class A fire rating where required by Code. Provide radius-exposed outside edges at countertop.
LAM-3	Manufacturer:	Formica
	Contact:	Linda Beran (562) 714-6061
	Pattern:	464-58
	Color:	Gray Stone
	Finish:	Matte
	Location:	Toilet Room Plumbing Apron
	Note:	Provide fire-rated substrate and adhesive to maintain or obtain Class A fire rating where required by Code. Provide radius-exposed outside edges at countertop.

B. Solid Surface Material (SECTION 06 60 00 - PLASTIC FABRICATIONS)

SSM-1	Manufacturer:	Hi Macs
	Contact:	Mitch Sebolsky (310) 910-5179
	Pattern:	T001 Venus
	Color:	Pause
	Finish:	Polished
	Sink:	**Per Plumbing Drawings** A
	Finish:	Polished
	Size:	0.75”Thick Top

NOT FOR BID

	Style:	HH6-LED Architectural Downlight
	Size:	6”Diam.
	Lamping:	LED
	Location:	Toilet Room
	Note:	UL Listed
FIX-5	Manufacturer:	Philips Day-Brite
	Contact:	(866) 502-5526
	Style:	Alkco - Little Inch HP100/200 Series
	Finish:	Matte White
	Size:	5”W x 1.125”H x Length varies per casework condition
	Lamping:	Per Electrical Engineer
	Location:	Under-Cabinet Task Light
	Note:	UL Listed, to be pigtailed with individual and override control.
FIX-6	Manufacturer:	Bruck
	Contact:	Performance Lighting Systems (800) 382-3055
	Style:	Ciro
	Finish:	119 White Diffuser with Matte Chrome Trim
	Size:	8.75” x 3.625”
	Lamping:	LED
	Location:	Nurse Station
	Note:	UL Listed. Mounting height 6’ 6” A.F.F. (bottom of Fixture)
FIX-7	Manufacturer:	Focal Point
	Contact:	Michael Shearer (949) 294-6983
	Style:	Seem 4 Recessed
	Finish:	White with Acrylic Lens
	Trim:	Trimless Flange at MC-1 Trim Flange at 9/16” Grid Ceiling
	Lamping:	LED, 3500K
	Size:	4”W
	Location:	Per Reflected Ceiling Plan
	Note:	UL Listed.

A

B. Window Treatment

SHD-1	**Manufacturer:**	**Mecho Shade / Architype**
	Contact:	**Pamela Adams (213) 631-5001**
	Pattern:	**Thermoveil Reversible Series 3000, 3200, 3300**
	Color:	**3011 Parchment 1-2%**
	Location:	**Exterior Windows**
	Note:	**Continuous Clutch system; (1) Shade per window module;** **Inside mounting bracket inside window mullion.**

C. Mirrors (SECTION 10 28 13 - TOILET ACCESSORIES)

MIR-1	Manufacturer:	ASI or Equal
	Contact:	(914) 476-9000
	Pattern:	Frameless Rectangular Mirror with 1” Beveled Edge
	Size:	0.25” Polished Plate Glass
	Location:	Toilet Room
	Note:	Meets ASTM C 1036-91

NOT FOR BID

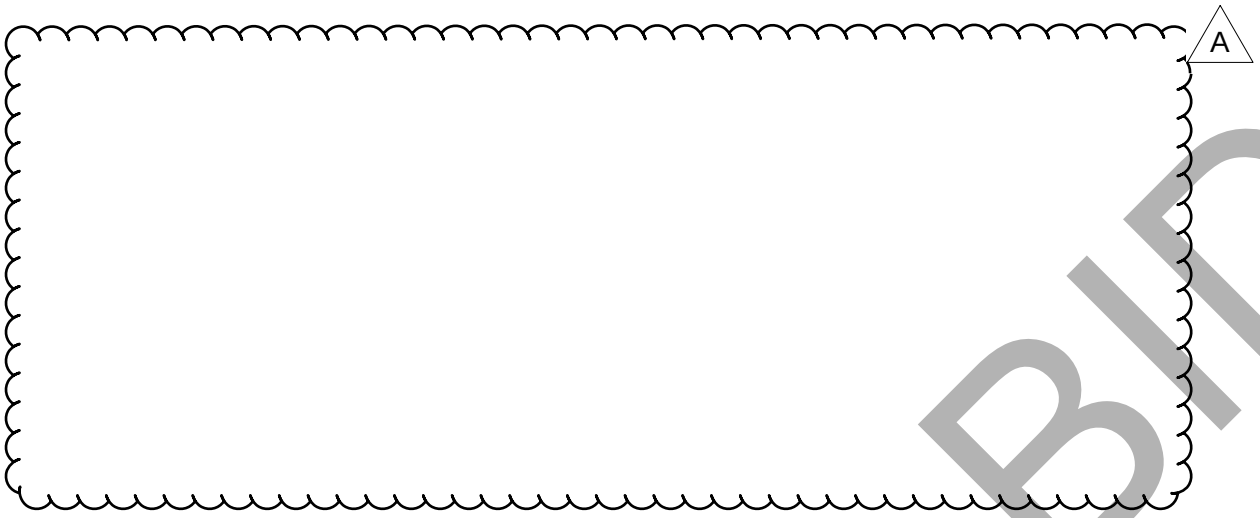

E. Privacy Curtain (SECTION 10 21 23 CUBICLE CURTAINS AND TRACK)

CUB-1	Manufacturer:	Architex
	Contact:	(800) 621-0827
	Pattern:	RX1006
	Color:	Equilibrium
	Size:	72”W
	Repeat:	29.5”V, 9.25”H
	Content:	100% Trevira CS
	Mesh:	Arc Com, Super Mesh, Color: Natural Beige
	Location:	Infusion Bays
	Note:	Note: `18” Integral Mesh and Grommets 6” O.C. Must comply with Fire Marshall requirements.

NOT FOR BID

GENERAL NOTES:

FINISH MATERIAL LEGEND
09 00 00 - 11