GENERAL NOTES:

1. ALL WORK SHALL BE IN ACCORDANCE WITH COUNTY OF SAN BERNARDINO MUNICIPAL CODE, THE STANDARD SPECIFICATIONS FOR PUBLIC WORKS CONSTRUCTION (GREEN BOOK) LATEST EDITION, AND ALL SUPPLEMENTS. THE PRELIMINARY SOILS REPORT DATED AND ANY SPECIAL REQUIREMENTS OF THE PERMIT.
2. APPROVAL OF THIS PLAN DOES NOT CONSTITUTE A REPRESENTATION AS TO THE ACCURACY OF THE LOCATION OR OF THE EXISTENCE OR NON-EXISTENCE OF ANY UNDERGROUND UTILITY PIPE OR STRUCTURE WITHIN THE LIMITS OF THIS PROJECT. THE CONTRACTOR SHALL ASSUME FULL RESPONSIBILITY FOR THE PROTECTION OF ALL UTILITIES WITHIN THE LIMITS OF THIS PROJECT.
3. DUST SHALL BE CONTROLLED BY WATERING.
4. FINISH GRADING WILL BE COMPLETED AND APPROVED BEFORE PLACEMENT OF EQUIPMENT.
5. PUBLIC STREETS SHALL BE KEPT CLEAN AND FREE FROM DIRT AND/OR DEBRIS. THE CONTRACTOR SHALL BE RESPONSIBLE FOR ALL COSTS INCURRED IN STREET CLEANING NECESSITATED BY HIS OPERATION.
6. NO GRADING IN EXCESS OF 5,000 CY SHALL BE STARTED WITHOUT FIRST NOTIFYING THE ENGINEER. A PRE-GRADING MEETING AT THE SITE IS REQUIRED BEFORE THE START OF GRADING WITH THE FOLLOWING PEOPLE PRESENT: OWNER, GRADING CONTRACTOR, SUPERVISING CIVIL ENGINEER, SOILS ENGINEER AND/OR GEOLOGIST,
7. NO FILL TO BE PLACED UNTIL STRIPPING OF VEGETATION, REMOVAL OF UNSUITABLE SOILS AND INSTALLATION OF SUB-DRAINS, IF ANY, HAS BEEN INSPECTED AND APPROVED BY THE SOILS ENGINEER.
8. NO ROCK OR SIMILAR MATERIAL GREATER THAN 6" IN DIAMETER WILL BE PLACED IN THE FILL UNLESS RECOMMENDATIONS FOR SUCH PLACEMENT HAVING BEEN SUBMITTED BY THE SOILS ENGINEER.
9. ALL EXISTING FILLS SHALL BE APPROVED BY THE SOILS ENGINEER OR REMOVED BEFORE ANY ADDITIONAL FILLS ARE ADDED.
10. FILLS SHALL BE BENCHED IN COMPETENT MATERIAL AS REQUIRED IN SOILS REPORT.
11. AREAS TO RECEIVE FILL SHALL BE PROPERLY PREPARED AND APPROVED BY THE SOILS ENGINEER PRIOR TO THE PLACING OF FILL.
12. THE CONTRACTOR SHALL COMPLY WITH THE GRADING CODE REQUIREMENTS WHEN AN EXCESS OF 1,000 CY IS MOVED ON PUBLIC ROADWAYS FROM THE SITE OF AN EARTH GRADING OPERATION. (15.04-210, 5.04.545, 15.38)
13. THE SOILS ENGINEER SHALL BE RESPONSIBLE FOR THE OBSERVATION AND APPROVAL CONCERNING THE PREPARATION OF GROUND TO RECEIVE FILLS, TESTING FOR REQUIRED COMPACTION, STABILITY OF ALL FINISH SLOPES AND THE DESIGN OF BUTTRESS FILLS, WHERE REQUIRED, INCORPORATING DATA SUPPLIED BY THE ENGINEERING GEOLOGIST AND INSURE COMPLIANCE WITH THE PLANS, SPECIFICATIONS, AND CODE WITHIN THEIR PURVIEW.
14. THE DESIGN CIVIL ENGINEER SHALL EXERCISE SUFFICIENT SUPERVISORY CONTROL DURING GRADING AND CONSTRUCTION TO INSURE COMPLIANCE WITH THE PLANS, SPECIFICATIONS, AND CODE WITHIN HIS PURVIEW.
15. SANITARY FACILITIES SHALL BE MAINTAINED ON THE SITE.
16. THE LOCATION AND PROTECTION OF ALL UTILITIES IS THE RESPONSIBILITY OF THE CONTRACTOR.
17. EXPORT SOIL MUST BE TRANSPORTED TO A LEGAL DUMP SITE.
18. IN THE EVENT THAT SOIL CONTAMINATION IS DISCOVERED DURING EXCAVATION, WORK SHALL BE STOPPED UNTIL A SITE ASSESSMENT AND MITIGATION PLAN HAS BEEN PREPARED, SUBMITTED AND APPROVED BY HCA/ENVIRONMENTAL HEALTH.
19. THE CONTRACTOR SHALL KEEP EACH EXISTING FUEL SERVICE SITE IN OPERATION AS LONG AS POSSIBLE. GOAL IS 2-3 WORKING DAYS, PER SITE.
20. PROPOSED PAVEMENT TO BE PLACED TO MATCH EXISTING SURFACE FLOW DRAINAGE PATTERN.
    (AC/AB AT 1.5% MIN.)
    (PCC AT 0.5% MIN.)
21. PLACE ELECTRICAL CONDUITS IN SLAB AT TANK LOCATIONS.
22. INSTALLATION CONFIGURATION TO MATCH EXISTING BALDY MESA FUEL SITE (LOCATED AT 12394 SYCAMORE ST. VICTORVILLE, CA 92392)
23. ALL NEW TANKS TO BE CONNECTED TO EMERGENCY GENERATOR

UNAUTHORIZED CHANGES AND USES

CAUTION:

THE ENGINEER PREPARING THESE PLANS WILL NOT BE RESPONSIBLE FOR UNAUTHORIZED CHANGES TO OR USE OF THESE PLANS. ALL CHANGES TO THE PLANS MUST BE IN WRITING AND MUST BE APPROVED BY THE PREPARER OF THESE PLANS.

LIABILITY FOR UNDERGROUND STRUCTURES

ALL UNDERGROUND UTILITIES SHOWN ON THE PLANS WERE OBTAINED FROM A REVIEW OF AVAILABLE RECORD DATA, WHILE DUE CARE WAS TAKEN IN PREPARATION OF THIS INFORMATION, THE ENGINEER CANNOT AND DOES NOT GUARANTEE THE ACCURACY OR COMPLETENESS OF THE INFORMATION.

IT SHALL BE THE RESPONSIBILITY AND LIABILITY OF THE CONTRACTOR TO DETERMINE THE EXISTENCE OR NON-EXISTENCE OF SUCH UTILITIES AND TO PROTECT THEM IN PLACE.

IN THE EVENT UNKNOWN UTILITIES OR UNKNOWN STRUCTURES ARE FOUND, OR KNOWN FACILITIES ARE FOUND DURING CONSTRUCTION AT UNEXPECTED ELEVATIONS OR LOCATIONS, THE ENGINEER IS TO BE NOTIFIED OF SUCH CONDITIONS AT ONCE. THE ENGINEER WILL MAKE ANY REQUIRED DESIGN CHANGES AND THE CONTRACTOR AGREES TO COMPLETE THE WORK INCLUDING REPAIRS REQUIRED IN AN EXPEDITIOUS MANNER.

THE CONTRACTOR AGREES THAT HE SHALL ASSUME SOLE AND COMPLETE RESPONSIBILITY FOR JOB SITE CONDITIONS DURING THE COURSE OF CONSTRUCTION OF THIS PROJECT INCLUDING SAFETY OF ALL PERSONS AND PROPERTY: THAT THIS REQUIREMENT SHALL APPLY CONTINUOUSLY AND NOT BE LIMITED TO NORMAL WORKING HOURS.

PSOMAS IS NOT RESPONSIBLE FOR ANY INFORMATION SHOWN ON THIS DRAWING PROVIDED BY OTHERS.

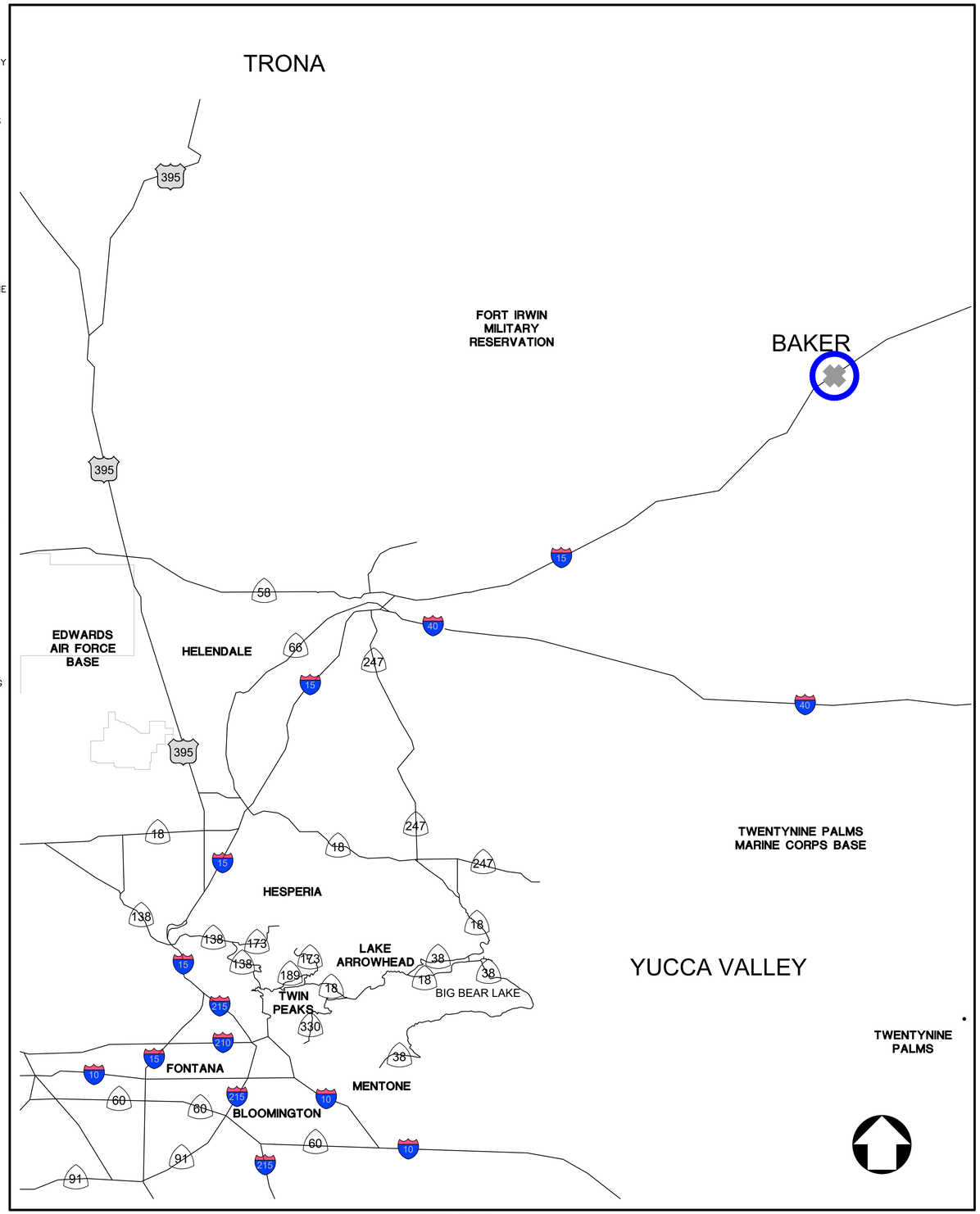

INDEX MAP

NTS

LEGEND

EXISTING FUEL SITE

SHEET INDEX:

SHT. NO.	DWG. NO.	SHEET	SITE NO.	REGION	SITE	CITY
01	0.10	TITLE SHEET				
02	0.20	CONSTRUCTION NOTE MATRIX				
03	1.10	PRECISE GRADING PLAN		BAKER	Baker Blvd.	Baker
04	2.10	TANK LAYOUTS				
05	2.11	TANK DETAILS				
06	2.12	TANK DETAILS				
07	2.13	TANK LAYOUT DETAILS				
08	2.14	SITE DETAILS				
09	E0.01	ELECTRICAL COVER SHEET				
10	E1.00	SITE LAYOUT PLAN		BAKER	Baker Blvd.	Baker
11	E1.01	ELECTRICAL DETAILS				

NOTICE TO CONTRACTOR FOR COUNTY PERMITS:

COUNTY PERMIT

A. AN ENCROACHMENT PERMIT FROM THE COUNTY OF SAN BERNARDINO WILL BE REQUIRED FOR WORK IN COUNTY RIGHT-OF-WAY.
B. CONTRACTOR SHALL PAY ANY FEES.
C. COUNTY SHALL BE LISTED AS CO-APPLICANT. CONTRACTOR SHALL SUBMIT OF PROOF OF INSURANCE, AND PAYMENT OF PERMIT FEE.
D. CONTRACTOR SHALL BE RESPONSIBLE FOR MAINTAINING ENCROACHMENT PERMIT IN FORCE, TRACKING EXPIRATION DATES, AND APPLYING FOR PERMIT RENEWALS AND EXTENSIONS AS NEEDED.

COUNTY OF SAN BERNARDINO FIRE DEPARTMENT PERMIT

A. A PERMIT FROM COUNTY OF SAN BERNARDINO FIRE DEPARTMENT WILL BE REQUIRED FOR WORK RELATED TO THE INSTALLATION OF FUEL TANKS
B. CONTRACTOR SHALL PAY ANY FEES.
C. COUNTY SHALL BE LISTED AS CO-APPLICANT. CONTRACTOR SHALL SUBMIT OF PROOF OF INSURANCE, AND PAYMENT OF PERMIT FEE.
D. CONTRACTOR SHALL BE RESPONSIBLE FOR MAINTAINING PERMIT IN FORCE, TRACKING EXPIRATION DATES, AND APPLYING FOR PERMIT RENEWALS AND EXTENSIONS AS NEEDED.

DEMOLITION / STAGING OF EXISTING TANKS / NOTES:

AFTER NEW WORK IS COMPLETED AND ACCEPTED:

A. COUNTY WILL EMPTY FUEL TANKS.
B. CONTRACTOR WILL REMOVE/RELOCATE FUEL TANKS TO AN UNUSED AREA ON PROPERTY.
C. CONTRACTOR WILL REMOVE FUEL PADS AND REPAIR PAVEMENT AND PATCH TO MATCH EXISTING SITE CONDITIONS.
D. COUNTY WILL CLEAN AND SCRAP EMPTY FUEL TANKS.

100% CONSTRUCTION DOCUMENTS

COUNTY OF SAN BERNARDINO

ARCHITECTURE & ENGINEERING DEPARTMENT

385 NORTH ARROWHEAD AVENUE
SAN BERNARDINO, CA 92415-0184

Project Title:
BAKER FUEL SITE

CIP NUMBER:

Project No:
2SAN020200

Project Address:
Fire Station 53
72734 Baker Blvd. Baker CA 92309

PSOMAS
3 Hutton Centre Drive
Suite 200
Santa Ana, CA 92707
(714) 751-7373 Fax(714) 545-8883

REGISTERED PROFESSIONAL ENGINEER ROBERT J. TALKOS No. 38832 CIVIL STATE OF CALIFORNIA

No.	REVISION	DATE

Drawing Title:
PRECISE GRADING PLAN

TITLE SHEET
INDEX MAP, NOTES

Revision Date:	
Scale:	
Drawn By:	MS
Reviewd By:	HN
Date:	12/18/19
Drawing Size:	24 x 36

Drawing Number
0.10
01 of 11 Sheets

Dec 16, 2019 - 7:25AM - M:\2SAN020200\ENGR\SHEETS\BAKER FUEL SITE LAYOUT PLAN\PL-BAKER_01 TITLE.DWG

NOTE	CONSTRUCTION ITEM:	QUANTITY	UNIT
1	PROTECT IN PLACE (ITEMS NOTED)	1	LS
2	INSTALL FUEL TANK PER DETAIL 2 ON SHT 5	2	EA
2B	INSTALL TANK ACCESSORIES PER DETAIL 2B ON SHT 5	2	LS
2C	INSTALL RUNG LADDER AND 3'X 18'PLATFORM THAT EXTENDS TO BOTH ENDS OF EACH FUEL TANK -GALVANIZED. SEE DETAIL 2C ON SHT 5	1	EA
2D	INSTALL TANK PUMP (FILL-RITE) PER DETAIL 2D ON SHT 6	2	EA
2E	INSTALL 2" TANK VALVE (MORRISON) PER DETAIL 2E ON SHT 6	2	EA
3	INSTALL FUEL TANKS LAYOUT PER DETAIL 3 ON SHT. 4	1	EA
4	INSTALL RELIANCE S1 DISPENSER PER DETAIL 4 ON SHT. 5	2	EA
5	CONSTRUCT 10" PCC CONCRETE PAVEMENT PER DETAIL 5 ON SHT. 7	928	SF
6	CONSTRUCTION 6" CONTAINMENT CURB (TYPE A1-6) PER APWA STD. PLAN 120-2. SEE DETAIL 6 ON SHT. 7	126	LF
7	INSTALL BOLLARD PER DETAIL 7 ON SHT. 7	11	EA
8	NOT USED	–	–
9	NOT USED	–	–
10	CONSTRUCT 30-FEET WIDE DRIVEWAY APPROACH PER SAN BERNARDINO COUNTY STD. DWG. 129A AND DETAIL 10 ON SHT. 8	378	SF
11	INSTALL SLIDING GATE LAYOUT PER DETAIL 11 ON SHT. 8	2	EA
12	INSTALL SENSOR LOOP FOR GATE EXIT AREAS TO BE PROVIDED BY CONTRACTOR. SEE GATE DETAIL 12 ON SHT. 8	2	EA
13	INSTALL WIRING AND CONDUIT FOR CARD READER BY CONTRACTOR. CARD READER AND PEDESTAL TO BE PROVIDED BY OWNER. SEE GATE DETAIL 13 ON SHT. 8	2	EA
14	INSTALL CHAIN LINK FENCE PER DETAIL 14 ON SHT. 8	181	LF
15	INSTALL ACCESS GATE – CHAIN LINK PER DETAIL 15 ON SHT. 8	1	EA
16	INSTALL FILTRATION BASIN USING 3/4" GRAVEL WITH GEOFABRIC PER DETAIL 16 ON SHT. 7	1	EA
17	INSTALL 4" PVC STORM DRAIN PIPE (MINIMUM SLOPE OF 0.5%). REMOVE CONFLICTING EXISTING STORM DRAIN PIPE.	78	LF
18	CONSTRUCT REDWOOD HEADER	390	LF

CONSTRUCTION NOTES MATRIX

NOTE: THIS IS BEING BID AS LUMP SUMP SO UNIT QUANTITIES ARE PROVIDED FOR REFERENCE ONLY.

100% CONSTRUCTION DOCUMENTS

COUNTY OF SAN BERNARDINO

ARCHITECTURE & ENGINEERING DEPARTMENT

385 NORTH ARROWHEAD AVENUE
SAN BERNARDINO, CA 92415-0184

Project Title:
BAKER FUEL SITE

CIP NUMBER:

Project No:
2SAN020200

Project Address:
Fire Station 53
72734 Baker Blvd. Baker CA 92309

PSOMAS
3 Hutton Centre Drive
Suite 200
Santa Ana, CA 92707
(714) 751-7373 Fax(714) 545-8883

REGISTERED PROFESSIONAL ENGINEER ROBERT J. TALAUS No. 38832 CIVIL STATE OF CALIFORNIA

No.	REVISION	DATE

Drawing Title:
PRECISE GRADING PLAN

CONSTRUCTION NOTES MATRIX

Revision Date:	
Scale:	
Drawn By:	MS
Reviewd By:	HN
Date:	12/18/19
Drawing Size:	24 x 36

Drawing Number
0.20
02 of 11 Sheets

Dec 16, 2019 – 7:25AM – M:\2SAN020200\ENGR\SHEETS\BAKER FUEL SITE LAYOUT PLAN\PL-BAKER_02 CN_MATRIX.DWG

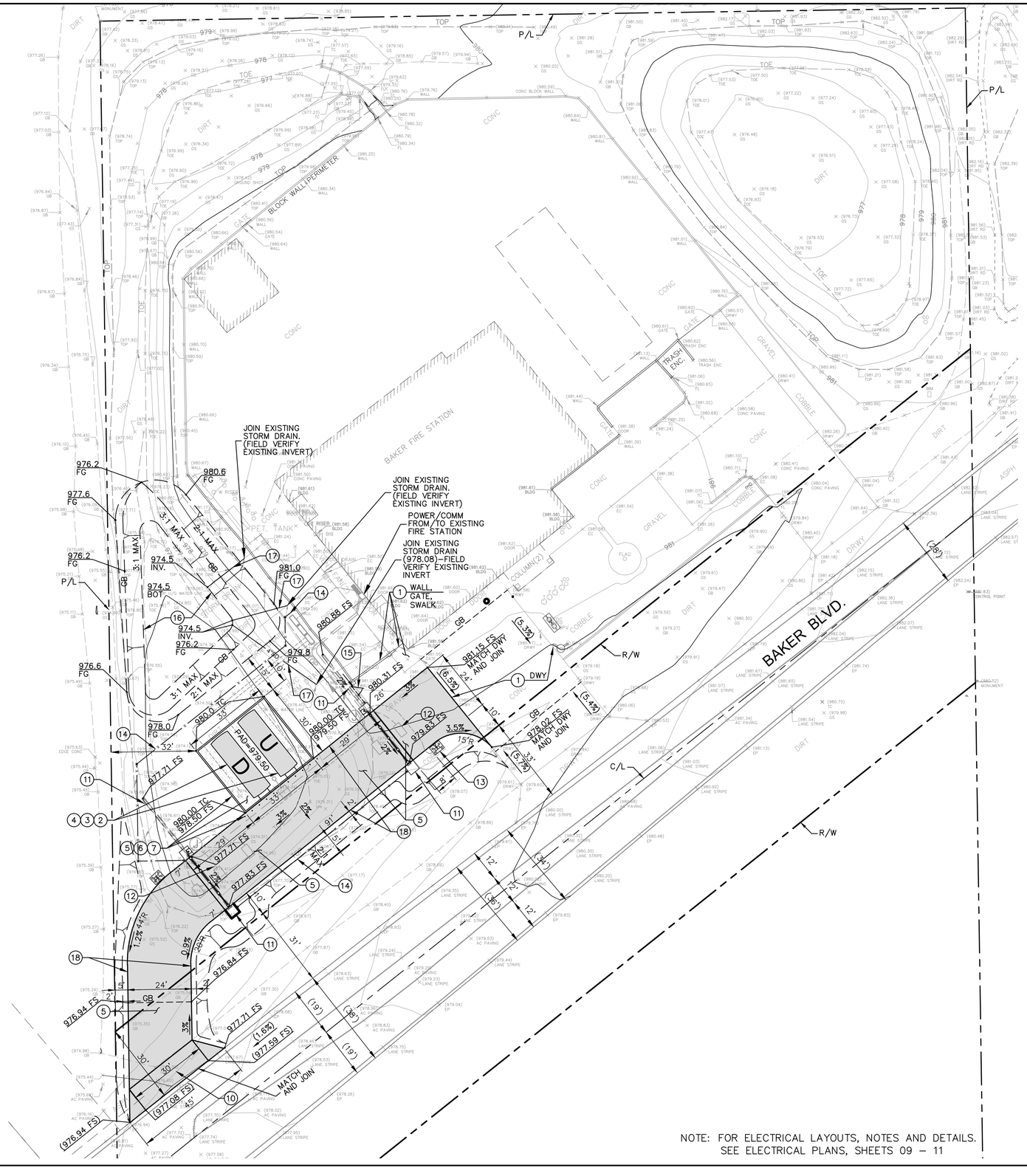

NOTE: FOR ELECTRICAL LAYOUTS, NOTES AND DETAILS. SEE ELECTRICAL PLANS, SHEETS 09 – 11

LEGEND

LAYOUT "A"
PROPOSED FUEL TANKS / DISPENSERS LAYOUT
D = DIESEL GASOLINE
U = UNLEADED GASOLINE

GENERAL NOTES

A. ADD CONDUIT FOR FUEL CONTROLLER AT DISTRIBUTION LOCATION.
B. CONTRACTOR TO RE–USE / EXTEND EXISTING POWER.
C. CONTRACTOR TO PROVIDE CONDUIT FOR DATA LINE AT EACH LOCATION.
D. REMOVAL AND DISPOSAL OF EXISTING TANKS BY OTHERS.
E. FLEET TO REMOVE PRODUCT FROM EXISTING FUEL TANKS.
F. PUMPS AND DISPENSERS TO BE RETURNED TO FLEET.
G. LOCATION OF EXISTING FUEL TANK AND NEW FUEL TANKS AS INDICATED.
H. CONNECT TO POWER SOURCE PER ELECTRICAL ENGINEER.

CONSTRUCTION NOTES

1. PROTECT IN PLACE (ITEMS NOTED)
2. INSTALL FUEL TANK PER DETAILS 2, 2B & 2C ON SHT. 5 AND DETAILS 2D & 2E ON SHT. 6
3. INSTALL FUEL TANKS LAYOUT PER DETAIL 3 ON SHT. 4
4. INSTALL RELIANCE S1 DISPENSER PER DETAIL 4 ON SHT. 5
5. CONSTRUCT 10" PCC CONCRETE PAVEMENT PER DETAIL 5 ON SHT. 7
6. CONSTRUCTION 6" CONTAINMENT CURB (TYPE A1–6) PER APWA STD. PLAN 120–2. SEE DETAIL 6 ON SHT. 7
7. INSTALL BOLLARD PER DETAIL 7 ON SHT. 7
8. NOT USED
9. NOT USED
10. CONSTRUCT 30–FEET WIDE DRIVEWAY APPROACH PER SAN BERNARDINO COUNTY STD. DWG. 129A AND DETAIL 10 ON SHT. 8
11. INSTALL SLIDING GATE LAYOUT PER DETAIL 11 ON SHT. 8
12. INSTALL SENSOR LOOP FOR GATE EXIT AREAS TO BE PROVIDED BY CONTRACTOR. SEE GATE DETAIL 12 ON SHT. 8
13. INSTALL WIRING AND CONDUIT FOR CARD READER BY CONTRACTOR. CARD READER AND PEDESTAL TO BE PROVIDED BY OWNER. SEE GATE DETAIL 13 ON SHT. 8
14. INSTALL CHAIN LINK FENCE PER DETAIL 14 ON SHT. 8
15. INSTALL ACCESS GATE – CHAIN LINK PER DETAIL 15 ON SHT. 8
16. INSTALL FILTRATION BASIN USING 3/4" GRAVEL WITH GEOFABRIC PER DETAIL 16 ON SHT. 7
17. INSTALL 4" PVC STORM DRAIN PIPE (MINIMUM SLOPE OF 0.5%). REMOVE CONFLICTING EXISTING STORM DRAIN PIPE.
18. CONSTRUCT REDWOOD HEADER

20' 10' 0' 20' 40'
GRAPHIC SCALE
Note: For reduced sized prints, original scale is in inches

100% CONSTRUCTION DOCUMENTS

COUNTY OF SAN BERNARDINO

ARCHITECTURE & ENGINEERING DEPARTMENT

385 NORTH ARROWHEAD AVENUE
SAN BERNARDINO, CA 92415-0184

Project Title:
BAKER FUEL SITE

CIP NUMBER:

Project No:
2SAN020200

Project Address:
Fire Station 53
72734 Baker Blvd. Baker CA 92309

PSOMAS
3 Hutton Centre Drive
Suite 200
Santa Ana, CA 92707
(714) 751–7373 Fax(714) 545–8883

REGISTERED PROFESSIONAL ENGINEER ROBERT J. TALAVOS No. 38832 CIVIL STATE OF CALIFORNIA

No.	REVISION	DATE

Drawing Title:
PRECISE GRADING PLAN

PRECISE GRADING PLAN

Revision Date:	
Scale:	1" = 20'
Drawn By:	MS
Reviewd By:	HN
Date:	12/18/19
Drawing Size:	24 x 36

Drawing Number
1.10
03 of 11 Sheets

Dec 16, 2019 – 7:26AM – M:\2SAN020200\ENGR\SHEETS\BAKER FUEL SITE LAYOUT PLAN\PL-BAKER_03 SITE.DWG

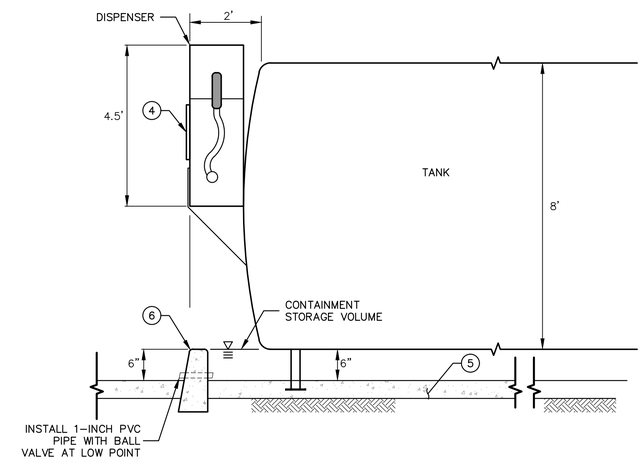

SECTION (A)

SCALE: 1"=2'

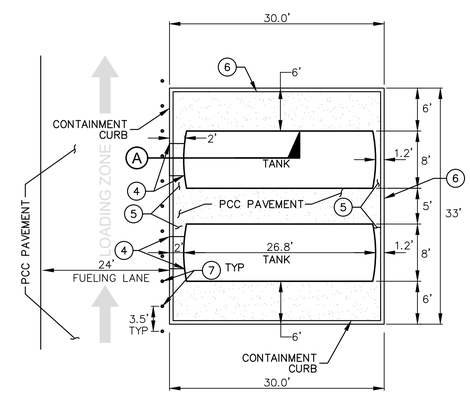

NOTES:

DOUBLE WALLED TANK WILL SATISFY SECONDARY CONTAINMENT REQUIREMENTS.
THE TRINARY CONTAINMENT CURB ONLY ADDRESS THE RAINFALL STORAGE.

CONSTRUCTION NOTES

4. INSTALL RELIANCE S1 DISPENSER PER DETAIL 4 ON SHT. 5
5. CONSTRUCT 10" PCC CONCRETE PAD PER DETAIL 5 ON SHT. 7
6. CONSTRUCTION 6" CONTAINMENT CURB (TYPE A1-6) PER APWA STD. PLAN 120-2. SEE DETAIL 6 ON SHT. 7
7. INSTALL BOLLARD PER DETAIL 7 ON SHT. 7

3 TYPICAL FUEL TANKS LAYOUT - SINGLE SIDE

SCALE: 1"=10'

100% CONSTRUCTION DOCUMENTS

COUNTY OF
SAN BERNARDINO

ARCHITECTURE &
ENGINEERING DEPARTMENT

385 NORTH ARROWHEAD AVENUE
SAN BERNARDINO, CA 92415-0184

Project Title:
BAKER FUEL SITE

CIP NUMBER:

Project No:
2SAN020200

Project Address:
Fire Station 53
72734 Baker Blvd. Baker CA 92309

PSOMAS
3 Hutton Centre Drive
Suite 200
Santa Ana, CA 92707
(714) 751-7373 Fax(714) 545-8883

REGISTERED PROFESSIONAL ENGINEER
ROBERT J. TALKUS
No. 38832
CIVIL
STATE OF CALIFORNIA

No.	REVISION	DATE

Drawing Title:
PRECISE GRADING PLAN

TANK LAYOUTS
SECTION

Revision Date:	
Scale:	
Drawn By:	MS
Reviewd By:	HN
Date:	12/18/19
Drawing Size:	24 x 36

Drawing Number
2.10
04 of 11 Sheets

Dec 18, 2019 - 7:08AM - M:\2SAN020200\ENGR\SHEETS\BAKER FUEL SITE LAYOUT PLAN\FL-BAKER_04-08 DETL.DWG

STANDARD TANK TOP PLATFORM AND LADDER

TANK SUPPORT

FUEL TECH
2680 US HWY 1
MIMS, FL 32754
1-800-628-1863
EMAIL: INFO@FUELTECH.COM

CUSTOM LADDER, PLATFORMS AND STAIRS

FUEL TECH CAN FABRICATE OSHA COMPLIANT LADDER AND CATWALK SYSTEMS IN MANY CUSTOMIZABLE CONFIGURATIONS. FROM STANDARD TANK-TOP PLATFORM AND LADDERS, TO COMPLETE FUEL FARM CATWALK SYSTEMS, FUEL TECH HAS THE EXPERTISE TO MAKE TANK AND FUEL FARM MAINTENANCE SAFE AND EFFICIENT!

(2C) RUNG LADDER AND 3' X 18' PLATFORM THAT EXTENDS TO BOTH ENDS OF EACH FUEL TANK - GALVANIZED

NOT TO SCALE

TANK ACCESSORIES:

- ANCHOR BOLTS
- BULKHEADS AND BAFFLES
- CUSTOM NAME AND TECHNICAL DATA PLATES
- DISCHARGE PIPING
- EQUIPMENT PACKAGES
- GAUGE AND PUMP SHELVES
- GROUND LEVEL LOAD (REMOTE FILL)
- SIDE MOUNT LADDER / CATWALK
- PUMP PLATFORM 24" x 36"
- REINFORCING PADS
- SIGHT TUBES
- SPILL BOX
- WEAR PLATES

NOTE:
PROVIDE GROUND LEVEL FILLING TO TOP OF TANK, WITH VENT.

(2B) TANK ACCESSORIES

NOT TO SCALE

The Reliance S1 AST combines space-saving design with full-featured performance

- Compact size is ideal for AST shelf-attached applications and other special situations like marinas
- Accurately records fuel usage with a weights and measures sealable meter
- Available in an E85 compatible model for an easy transition to alternative fueling

Specifications

Model Number: Prefix / G6101D / Suffix 1 Options / Suffix 2 Options (e.g. / G6101D / 2JK / W1)
Standard model includes the following options as standard: 1" piping [2], j-box [J], hose hanger [K], solenoid valve [//W1]. Option prefix or suffixes are noted in the options below in [ ]. A "//" (e.g. [//W1]) indicates a suffix 2 option.

Performance: Up to 22 GPM (83 lpm)*.

Compatibility: For dispensing low viscosity petroleum fuels - diesel; biodiesel blends up to 20%; gasoline, including oxygenated blends; kerosene; AvGas^, and jet fuel^. See E85 option. Fuel must meet the applicable ASTM standard.
^Note: Confirm with fuel supplier on any fluid path metal restrictions before use. If aluminum, zinc, or red metals are not desired, the E85 option may be utilized.

Register: Non-computer mechanical register with power reset with interlock. Up to 999.9 gallons per delivery. Non-resettable accumulative totalizer up to 9999999.9. Optional liters measure.

Meter: Reliable micro-accurate 2-piston positive displacement design. Weights & Measures sealable.

Solenoid Valve [//W1]: 1" (2.5 cm) two-stage valve. Single stage valve with E85 option.

Electrical: 115VAC, 60 Hz. Optional 230VAC 50/60 Hz operation [Z].

Inlet Connection: 1½" (3.8 cm) NPT. Bottom access hole sized for 1½" emergency valve installation.

Discharge: 1" (2.5 cm) with ¾" reducing bushing.

Mounting: Four 7/16" (1.1 cm) mounting holes in bottom. Optional shelf-mount kit.

Cabinet Construction: All panels are fabricated from galvannealed steel for corrosion resistance. Front door includes lock and is removable for service. Outer sides, back, and top are removable for additional service access if required.

Cabinet Finish: Extremely durable powder-coated finish gives outstanding appearance and toughness. Metallic silver sides, top, and back. Blue door with black register decal. Optional black, brown, green, red, silver, yellow, or white doors.

Nozzle Boot and Hook: Fits standard UL interchangeable nozzles. Also fits Emco Wheaton 4015 and Husky V short spout balance vapor recovery nozzles. Hook extension kits+ for OPW 11VF (p/n 892081-001) and Healy 400 (p/n 892080-001) long spout vapor recovery nozzles. Lift-to-start nozzle hook.

Hose Hanger [K]: Keeps hose off ground when not in use.

Actual Dimensions: 30.25"H x 16.75"W x 14"D (76.8cm H x 42.5cm W x 35.6cm D)

Pressure: Working pressure up to 50 psi.

Approvals: C-UL-US Listed. Sealable by U.S. Weights & Measures.

Options

Shelf-Mount Kit+: Carbon steel shelf brackets for mounting dispenser to tank. Black powder coat finish. P/n 891839-001.

Pulsers: 10:1 [7A] and 100:1 [7B] ratio options.

E85 [E/ prefix]:** Utilizes nickel-plating, hard anodizing, stainless steel, and special elastomers, which have been used successfully for E85 compatibility.

Hose Mast [//J]: Raises hose to ease hose handling. Optional hose clamp kit+ (p/n 890898-001) for Goodyear® vapor recovery hose.

External Filter Kit+: Installs on discharge. P/n 889921-002.

Stainless Steel: All exterior panels [//S], all panels except painted galvannealed steel doors [//S1], or stainless steel doors only [//S2].

Other Options: Liter measure [8] and 230VAC 50/60 Hz operation [Z].

Rear View Shown

+Note: Kits require field installation.

**Flow rates are maximum test rates at discharge. Actual rates will depend upon installation conditions, dispenser accessories and the size of the submersible or suction pump.*

***E/models are UL Listed for Class I liquids, which include gasoline and diesel. A UL listing specific to a new UL guideline for ethanol is pending. Select only hose and nozzle accessories that are expressly compatible with the fuel type being dispensed.*

NOTE:
PROVIDE WIRELESS DATA TO MAIN BUILDING

(4) RELIANCE S1 DISPENSER

NOT TO SCALE

FUEL TANK PARTS

133-MHC-1000	10,000 GALLON CYLINDRICAL TANK SUPER VAULT
16SVEQ1005	2" MORRISON AUTOMATIC SHUTOFF VALVE EVR
16SVGF30015	HINGED GROUND LEVEL FILL SPILL PAN WITH HAND PUMP
16SVGF10503	MHC 3" D5 NON-CARB GROUND LEVEL FILL SYSTEM
16SVGF20503	MHC 3" D5 CARB GROUND LEVEL FILL SYSTEM
SVEQ80160	GASOLINE PHASE I & II DISPENSONG PACKAGE WITH SUCTION PUMP & W&M WAYNE TANK MOUNTED DISPENSER
L&P10KD5	RUNG LADDER AND 3'x10' PLATFORM MCF STANDARD – GALVANIZED
TA-732A	SECONDARY ALARM & SENSORS

CONNECTION DIA.	CUT HOLE PRIMARY TANK	SECONDARY TANK
ø2" FPT	ø2 1/2"	ø2 7/8"
ø4" FPT	ø5 11/16"	ø5 3/8"
ø6" FPT	ø6 3/4"	ø7 5/8"
ø6" FLNAGE	ø6 3/4"	ø6 3/4"
ø8" SEC. E.V.	–	ø6 3/4"
ø8" PRIM E.V.	ø8 3/4"	ø9 3/4"
ø24" MANWAY	ø25 9/16"	ø25 9/16"

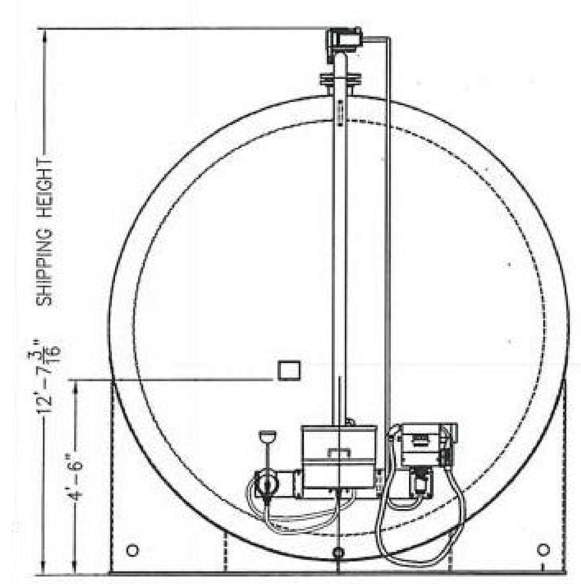

LEFT END VIEW

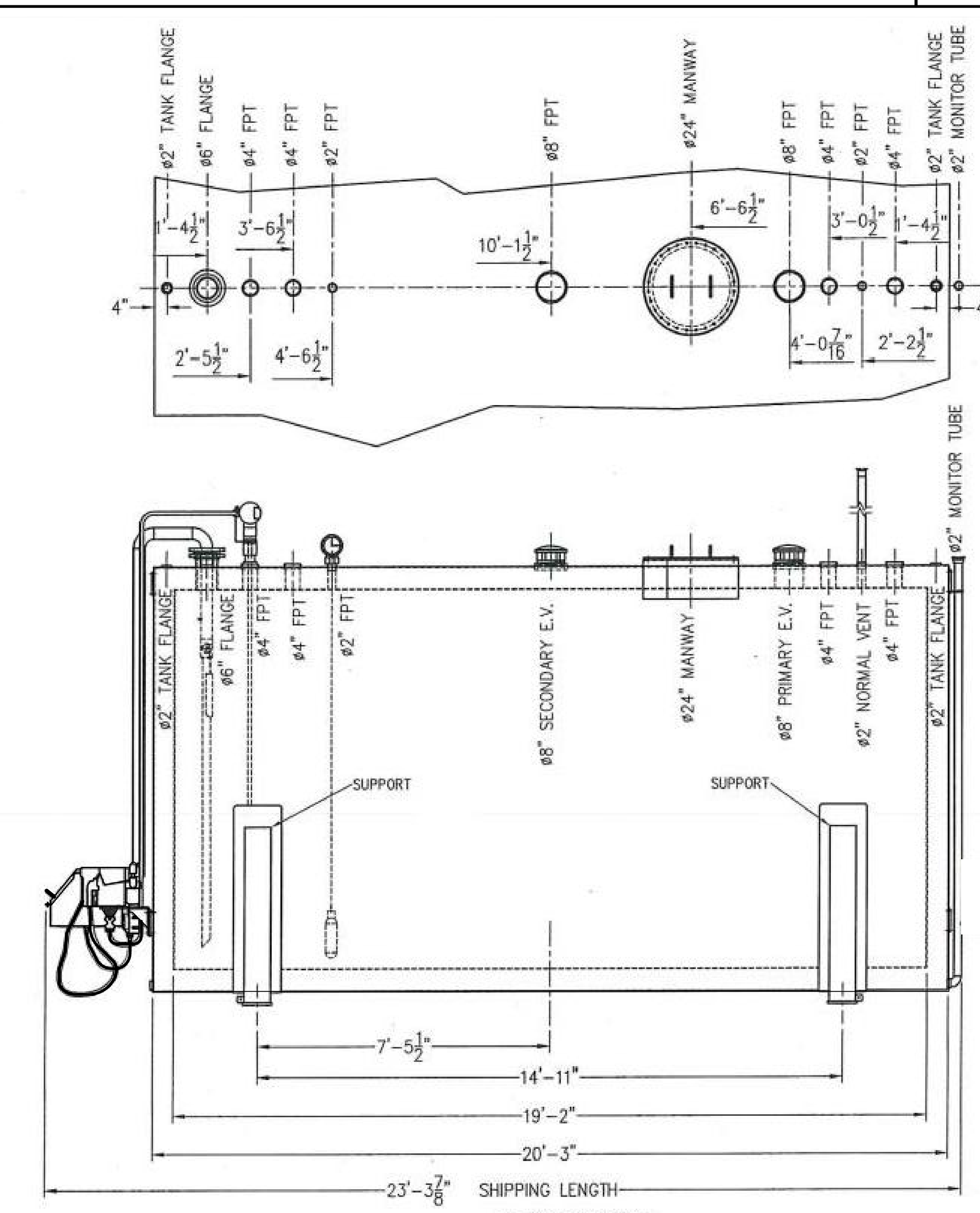

ELEVATION VIEW

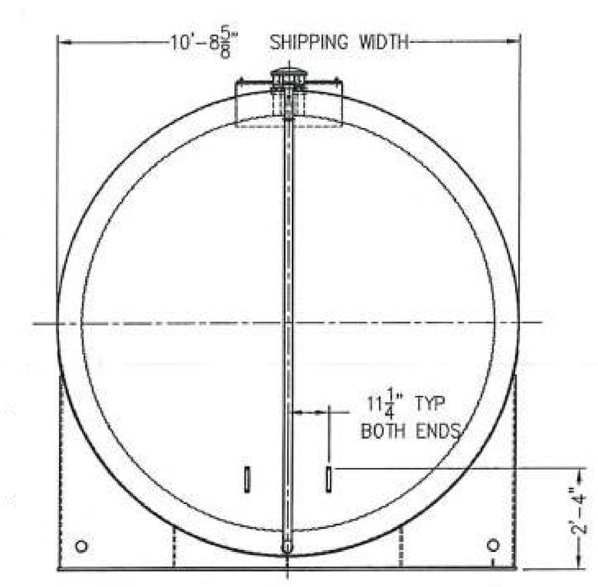

RIGHT END VIEW

CUSTOMER SIGNATURE: ________________
DATE: ________________
SHOP ORDER NO.: ________________
EST. STEEL TANK WEIGHT: ________________

MODEL NO. MHC-D5-10000

VENTING CAPACITY
PRIMARY: 372,600 SCFH
SECONDARY: 410,800 SCFH

NO.	REVISION	DATE	BY
–		–	–

NO. REQUIRED (1) ONE — ITEM NO. NONE

modern custom fabrication
fresno california
P.O. Box 11925 • 2421 E. California Ave. • Fresno, California 93721
Ph: (559) 264-4741 OR 800-800-TANK • Fax: (559) 237-3413
Prepared for
MODEL NO. MHC-D5-10000
SUPERVAULT MH-PROTECTED ABOVE GROUND STORAGE TANK
DRAWN BY: JJK — SCALE: NTS
CHECKED BY: — DATE:
DWG/JOB NO.: — — SHT. 1 OF 1

(2) TANK DETAIL

NOT TO SCALE

COUNTY OF SAN BERNARDINO

ARCHITECTURE & ENGINEERING DEPARTMENT

385 NORTH ARROWHEAD AVENUE
SAN BERNARDINO, CA 92415-0184

Project Title:
BAKER FUEL SITE

CIP NUMBER:

Project No:
2SAN020200

Project Address:
Fire Station 53
72734 Baker Blvd. Baker CA 92309

PSOMAS
3 Hutton Centre Drive
Suite 200
Santa Ana, CA 92707
(714) 751-7373 Fax(714) 545-8883

REGISTERED PROFESSIONAL ENGINEER ROBERT J. TALAFUS No. 38832 CIVIL STATE OF CALIFORNIA

No.	REVISION	DATE

Drawing Title:
PRECISE GRADING PLAN

TANKS DETAILS

Revision Date:	
Scale:	
Drawn By:	MS
Reviewd By:	HN
Date:	12/18/19
Drawing Size:	24 x 36

Drawing Number
2.11
05 of 11 Sheets

100% CONSTRUCTION DOCUMENTS

Dec 16, 2019 – 7:47AM – M:\2SAN020200\ENGR\SHEETS\BAKER FUEL SITE LAYOUT PLAN\PL-BAKER_04-08 DET.DWG

Model 927/928/735DC Series & 9095A5201

SPECIFICATION SHEET

The Morrison 927 dry disconnect adaptor is installed at the fill point in the fill line of a fuel storage tank system. The internal spring loaded poppet assembly remains closed providing a liquid-tight seal when not connected to a dry disconnect adaptor.

The Morrison 928 dry disconnect coupler is installed on the end of delivery vehicle hose. When coupled, the 927 and 928 provide a liquid-tight connection enabling a dry connection and a dry disconnection.

The 735DC dust cap serves as a protective cover for the 927 adaptor when not in use.

	I.D. Number	Size	Description	A	B	C	D	E	Cap Size	Weight (lbs)
	927---0150 1A	1½"	Dry disconnect adaptor			A		N		1.63
	927---0200 AA	2"	Dry disconnect adaptor, cam style			AA		N		1.68
EVR	927---0200AAEVR	2"	Dry disconnect adaptor, alum w/Viton®	2S	2½	A	V	Y	2½"	1.98
EVR	927---0300AAEVR	3"	Dry disconnect adaptor, alum w/Viton®	3N	4	A	V	Y	4"	3.50
EVR	927---0400AAEVR	4"	Dry disconnect adaptor, alum w/Viton®	4N	4	A	V	Y	4"	3.50
EVR	9095A5201AAEVR	4" x 2"	Dry disconnect adaptor, alum w/Viton®	4N	2½	A	V	Y	2½"	2.50
	927B--0200 AA	2"	Dry disconnect adaptor, cam/groove style			B				
	927S--0150 1A	1½"	Dry disconnect adaptor			SS				
	927S--0200 1A	2"	Dry disconnect adaptor			SS				
	927S--0300 1A	3"	Dry disconnect adaptor			SS				
EVR	928---0150ACEVR	1½"	Dry disconnect coupler, alum with Viton®	1N	2	A	V	Y		4.40
EVR	928---0200ACEVR	2"	Dry disconnect coupler, alum with Viton®	2N	2½	A	V	Y		6.0
EVR	928---0300ACEVR	3"	Dry disconnect coupler, alum with Viton®	3N	4	A	V	Y		12.60
EVR	735DC-2000ACEVR	2"	Dust cap, use w/ 1½" 927 adaptors			A	B	Y		1.0
EVR	735DCA2000ACEVR	2"	Dust cap, use w/ 1½" 927 adaptors			AA	B	Y		1.0
EVR	735DC-2500ACEVR	2½"	Dust cap, use w/ 2" 927 adaptors			A	B	Y		1.25
EVR	735DCA2500ACEVR	2½"	Dust cap, use w/ 2" 927 adaptors			AA	B	Y		1.25
EVR	735DC-3000ACEVR	3"	Dust cap, use w/ 3" adaptors			A	B	Y		1.50
EVR	735DCA3000ACEVR	3"	Dust cap, use w/ 3" adaptors			AA	B	Y		1.50
EVR	735DC-4000ACEVR	4"	Dust cap, use w/ 3" & 4" 927 adaptors			A	B	Y		2.50
EVR	735DCA4000ACEVR	4"	Dust cap, use w/ 3" & 4" 927 adaptors			AA	B	Y		2.50

SPECIFICATION OPTIONS:

A—Threads: 1½" NPT (1N); 2" NPT (2N); 2" NPS (2S); 3" NPT (3N); 4" NPT (4N)
B—Coupler Size
C—Body: Hard coated aluminum (A); Anodized aluminum (AA); Brass (B); Stainless steel (SS)
D—Seals: Viton® (V); Buna-N (B)
E—EVR: Yes (Y); No (N)

570 E. 7th Street, P.O. Box 238 | Dubuque, IA 52004-0238
t. 563.583.5701 | 800.553.4840 | f. 563.583.5028
www.morbros.com

MORRISON BROS. CO.

2E MORRISON 927-0200AA 2" VALVE

Repair Kits (kit # / parts included)
KIT300SW: 36, Lever not shown
KIT300JC: 35, 38, 40
KIT300BV: 61, 82
KIT700SL: 42-44, 49-53
KIT300RG: 5, 6, 7, 24, 25, Cover
KIT300BG: 62
KIT300SG: 2, 3, 4
KIT120NB: 60, 61
KIT300BD*: 3, 7, 11, 15-23, 30, 33
KIT300CV: 10, 11
KIT300OT: 84, 85, 86, 87, 88
KIT300AS: Anti-Siphon Kit (parts not shown): Tube, O-rings, adapters, pipe

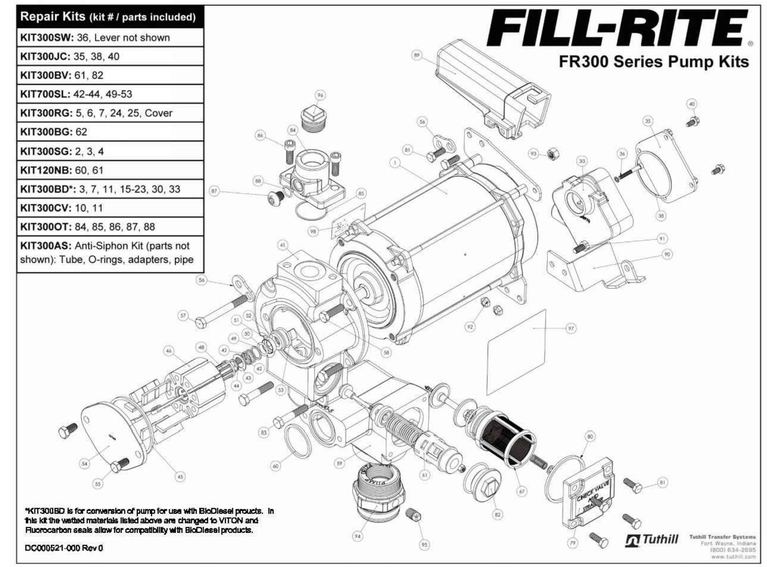

*KIT300BD is for conversion of pump for use with BioDiesel products. In this kit the wetted materials listed above are changed to VITON and Fluorocarbon seals allow for compatibility with BioDiesel products.

DC000521-000 Rev 0

Materials:

- 1-1/4" pipe cut to a length that will terminate at least 3" from the bottom of the tank when installed into the tank adapter with the tank adapter installed into the tank flange (see **SKID TANK INSTALLATION** diagram).
- Threaded pipe joint sealant appropriate for application.

Installation Procedure:

1) Thread the 1-1/4" pipe into the tank adapter. Seal threads liquid tight with appropriate thread sealant.
2) Install the tank adapter into the tank flange; seal threads liquid tight with appropriate thread sealant.
3) Mount the pump on the adapter; seal threads liquid tight with appropriate thread sealant.
4) Fill-Rite recommends installation of our Anti-Siphon Device (see page 7 for detailed information).

Skid Tank Installation

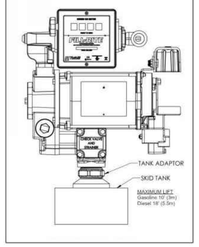

FILL-RITE FR313V Technical Specifications

The Most Trusted Name in Pumps and Meters

Motor	
Power -AC 115, 230, 115/230	115/230 VOLT
HZ 50, 60, 50/60	60/50
Power - DC 12, 24, 12/24	None
HP (horsepower) rating	3/4
Power cord length	None
Power cord gauge	N/A
Power cord DC battery connectors	N/A
Amps (FLA)	9.8/4.9/11.4/5.7 A
RPM	1725/1425
Duty cycle	30 min.
Thermal protection switch	Y
Circuit protection fuse	NONE
Certification	UL, cUL
Pump	
Type- rotary, diaphragm, gear, vane	Rotary Vane
GPM in supplied configuration	26.8
GPM open flow - no hose or nozzle	34.3
By-pass pressure rating (psi) - Max	26
Dry vac (in Hg)	14
Head- Max	60.06
Anti-siphon valve	Anti-siphon Ready
Inlet - Size / Thread	1 ¼"
Outlet – Size / Thread	NPT
Mount	Bung (NPT)
Materials of construction -pump housing	Cast Iron
Materials of construction- wetted material	Buna
Rotor materials of construction	80% Iron/20% Copper
Rotor vane material of construction	Carbon
Compatible fluids	Diesel, Gasoline, Bio-Diesal up to B20, E15, Kerosene
Strainer mesh size	40 x 40 x .008"
Warranty (yr)	2 Years
Accessories	
Suction pipe material	None
Suction pipe length- extended/not extended	None
Nozzle- size	None
Nozzle- manual / automatic	None
Hose liquid materials compatibility	None
Hose diameter	None
Hose length	None
Hose static wire (Y/N)	None
Logistics	
UPC	0-89404-07657-6
Length	19
Width	18
Height	18

FR313V

Sku/Kit #'s	Small Pump Kits	Consists of
KIT300BO	Bio-Diesel	Special Shaft Seal Assembly, Gasket, Inlet Gasket, Bypass O-ring.
KIT300BV	Bypass	Poppet, Spring, O-ring, Cap
KIT300JC	Junction Box	Junction Box Cover, O-Ring, Hardware
KIT300NB	Nozzle Bool	Nozzle Bool, Attaching Hardware
KIT300NR	Nozzle Retainer	Lockable Nozzle Retainer; Hardware
KIT300OT	Outlet	Outlet Flange, O-Ring Seal, hardware
KIT300RG	Rotary Group	Rotor, 8 Vanes, Rotor Key, Gasket, Rotor Cover, 4 Screws
KIT300SW	Switch Lever	Switch Lever, Nut
KIT700AS	Anti-Siphon	Anti-Siphon Hose and Hardware
KIT700BG	Inlet	Inlet Adapter
KIT700SL	Shaft Seal	8 Piece Assembly

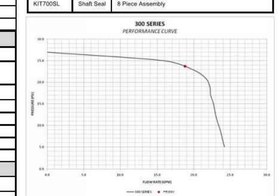

Tuthill
Tuthill Transfer Systems
8825 Aviation Drive
Fort Wayne, IN 46809
(800) 634-2695
www.tuthill.com

- PUMP TO BE LOCATED AT TOP OF EACH TANK.

2D FILL-RITE 300 SERIES PUMP
NOT TO SCALE

100% CONSTRUCTION DOCUMENTS

COUNTY OF SAN BERNARDINO

ARCHITECTURE & ENGINEERING DEPARTMENT

385 NORTH ARROWHEAD AVENUE
SAN BERNARDINO, CA 92415-0184

Project Title:
BAKER FUEL SITE

CIP NUMBER:

Project No:
2SAN020200

Project Address:
Fire Station 53
72734 Baker Blvd. Baker CA 92309

PSOMAS
3 Hutton Centre Drive
Suite 200
Santa Ana, CA 92707
(714) 751-7373 Fax(714) 545-8883

REGISTERED PROFESSIONAL ENGINEER ROBERT J. TALVITIE No. 38832 CIVIL STATE OF CALIFORNIA

No.	REVISION	DATE

Drawing Title:
PRECISE GRADING PLAN

TANK DETAILS

Revision Date:	
Scale:	
Drawn By:	MS
Reviewd By:	HN
Date:	12/18/19
Drawing Size:	24 x 36

Drawing Number
2.12
06 of 11 Sheets

Dec 16, 2019 – 7:47AM – M:\2SAN020200\ENGR\SHEETS\BAKER FUEL SITE LAYOUT PLAN\PL-BAKER_04-08 DET.DWG

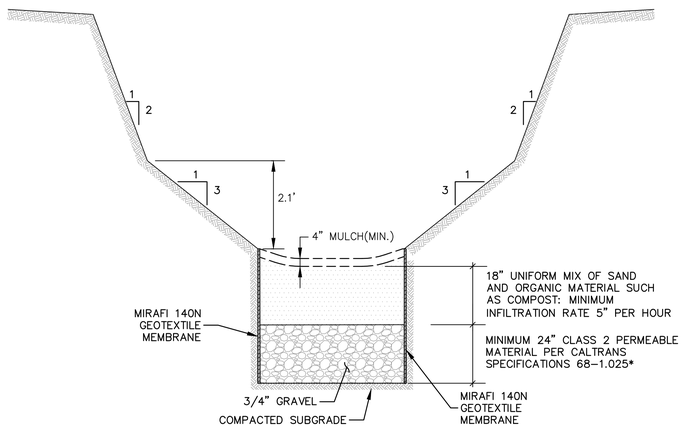

LOCATION PER PLAN AND DETAIL

16 INFILTRATION BASIN DETAIL

NTS

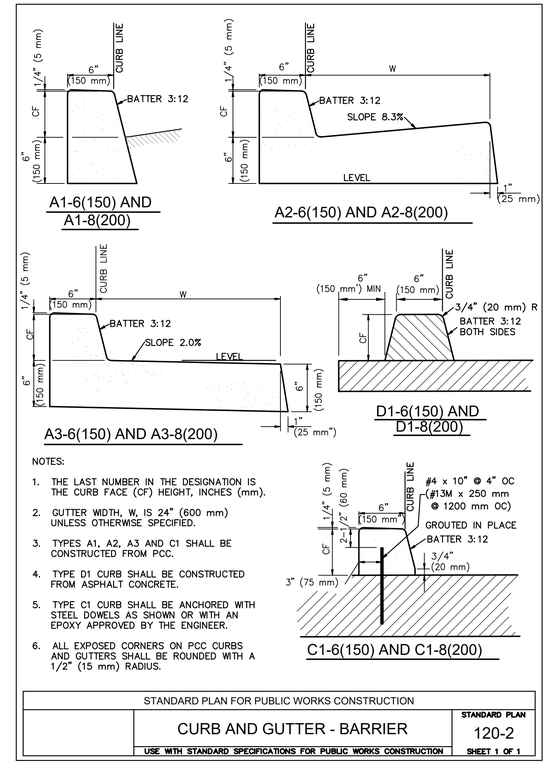

NOTES:

1. THE LAST NUMBER IN THE DESIGNATION IS THE CURB FACE (CF) HEIGHT, INCHES (mm).
2. GUTTER WIDTH, W, IS 24" (600 mm) UNLESS OTHERWISE SPECIFIED.
3. TYPES A1, A2, A3 AND C1 SHALL BE CONSTRUCTED FROM PCC.
4. TYPE D1 CURB SHALL BE CONSTRUCTED FROM ASPHALT CONCRETE.
5. TYPE C1 CURB SHALL BE ANCHORED WITH STEEL DOWELS AS SHOWN OR WITH AN EPOXY APPROVED BY THE ENGINEER.
6. ALL EXPOSED CORNERS ON PCC CURBS AND GUTTERS SHALL BE ROUNDED WITH A 1/2" (15 mm) RADIUS.

STANDARD PLAN FOR PUBLIC WORKS CONSTRUCTION		
	CURB AND GUTTER - BARRIER	STANDARD PLAN 120-2
	USE WITH STANDARD SPECIFICATIONS FOR PUBLIC WORKS CONSTRUCTION	SHEET 1 OF 1

NOTE:
* PLACE 1"-INCH PVC DRAIN AT LOW POINT WITH MANUAL BALL VALVE TO ALLOW DRAINAGE.

6 CONTAINMENT CURB (TYPE A1-6)

NOT TO SCALE

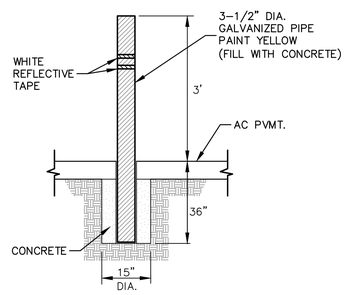

NOTE:

1. CONCRETE fc'=3000 PSI @ 28 DAYS
2. PLACE BOLLARDS AT 3.5-FT O.C. (MAX).

7 CONCRETE BOLLARD DETAIL

NOT TO SCALE

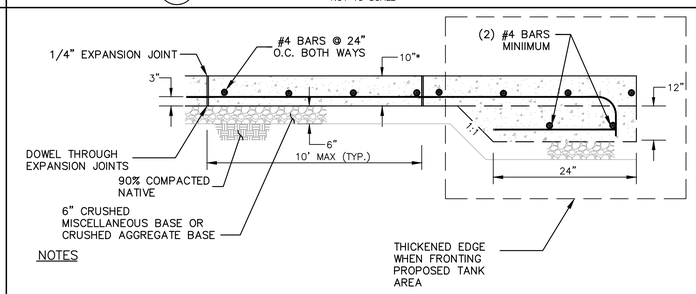

NOTES

1. BOTH TRANSVERSE AND LONGITUDINAL JOINTS SHOULD BE SPACED ON MAXIMUM 10 FEET INTERVALS. THE DEPTH OF TRANSVERSE WEAKENED PLANE JOINTS SHOULD BE AT LEAST 1/4 OF THE PAVEMENT THICKNESS. THE DEPTH OF LONGITUDINAL JOINTS SHOULD BE AT LEAST 1/4 OF THE PAVEMENT THICKNESS PLUS 1/2".
2. EXTERIOR CONCRETE SHOULD BE SUPPORTED ON NON-EXPANSIVE, COMPACTED FILL. THE USE OF CLAYEY SOILS IN THE SLAB SUBGRADE SHOULD NOT BE PERMITTED WITHIN 1 FOOT OF THE FINISHED SUBGRADE.
3. REFER TO THE GEOTECHNICAL REPORT (IF PROVIDED)

* CONCRETE THICKNESS WILL BE VERIFIED BY THE SOIL ENGINEER AFTER GRADING (DEPENDING ON THE R-VALUE AND THE EXPANSIVITY INDEX OF THE SOIL)

5 10" CONCRETE PAVEMENT DETAIL

NTS

100% CONSTRUCTION DOCUMENTS

COUNTY OF SAN BERNARDINO

ARCHITECTURE & ENGINEERING DEPARTMENT

385 NORTH ARROWHEAD AVENUE
SAN BERNARDINO, CA 92415-0184

Project Title:
BAKER FUEL SITE

CIP NUMBER:

Project No:
2SAN020200

Project Address:
Fire Station 53
72734 Baker Blvd. Baker CA 92309

PSOMAS
3 Hutton Centre Drive
Suite 200
Santa Ana, CA 92707
(714) 751-7373 Fax(714) 545-8883

REGISTERED PROFESSIONAL ENGINEER ROBERT J. TALKUS No. 38832 CIVIL STATE OF CALIFORNIA

No.	REVISION	DATE

Drawing Title:
PRECISE GRADING PLAN

TANK LAYOUT DETAILS

Revision Date:	
Scale:	
Drawn By:	MS
Reviewd By:	HN
Date:	12/18/19
Drawing Size:	24 x 36

Drawing Number
2.13
07 of 11 Sheets

Dec 16, 2019 - 7:47AM - M:\2SAN020200\ENGR\SHEETS\BAKER FUEL SITE LAYOUT PLAN\PL-BAKER_04-08 DET.DWG

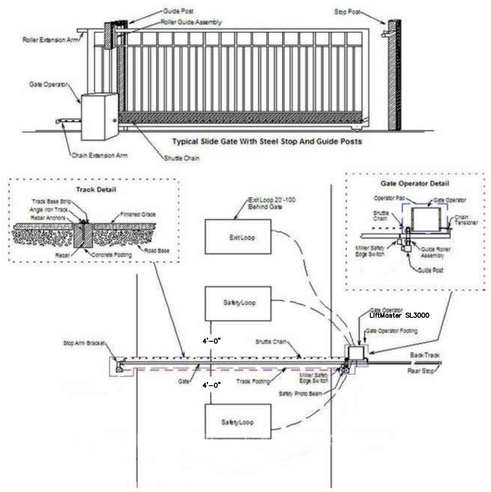

13 12 11 SLIDING GATE LAYOUT

NOT TO SCALE

NOTES:

1. SECURE DRIVE-FIT GALVANIZED CAP TO POST WITH 1/4" (6 mm) ROUND-HEAD RIVET.
2. H DENOTES FABRIC WIDTH AND NOMINAL FENCE HEIGHT. H = 5' (1.5 m) UNLESS OTHERWISE NOTED.
3. IF FENCE WITH TOP RAIL IS SPECIFIED, DELETE STEEL TENSION WIRE AT TOP, AND PIPE RAILS AT INTERMEDIATE, SLOPE, END AND CORNER POSTS. EXTEND TENSION ROD TO TOP RAIL.
4. BARBED WIRE SHALL BE USED ONLY WHEN SPECIFIED.
5. POST SPACING IS MAXIMUM 10' (3.0 m).
6. FILL CLEAR OPENINGS GREATER THAN 3" (75 mm) WITH FABRIC. FOR OPENINGS LESS THAN 18" (450 mm), TIE FABRIC TO POSTS.
7. USE ONE POST FOR COMBINED SLOPE AND CORNER POST IF TOP OF CHANNEL WALL IS CONSTRUCTED AS SHOWN FOR "ALTERNATE".
8. STEEL BANDS AT TENSION BARS SHALL BE 1/8" x 1" (3 x 25 mm), MINIMUM, SPACED AT MAXIMUM 16" (400 mm).
9. SECURE TENSION WIRES TO EACH LINE POST WITH TIE WIRES.

STANDARD PLANS FOR PUBLIC WORKS CONSTRUCTION	STANDARD PLAN
CHAIN LINK FENCE AND GATES	600-3 SHEET 3 OF 3

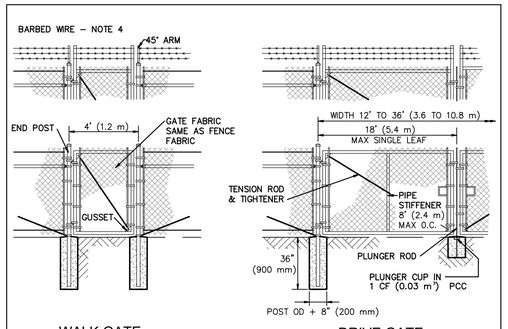

WALK GATE

DRIVE GATE

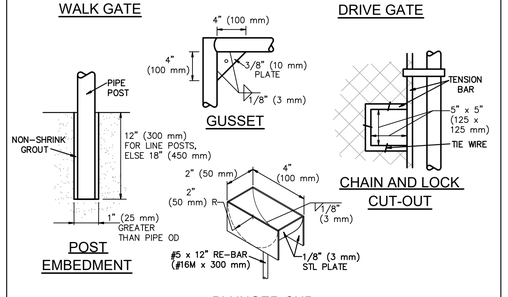

GUSSET

POST EMBEDMENT

CHAIN AND LOCK CUT-OUT

PLUNGER CUP ISOMETRIC

STANDARD PLANS FOR PUBLIC WORKS CONSTRUCTION	STANDARD PLAN
CHAIN LINK FENCE AND GATES	600-3 SHEET 2 OF 3

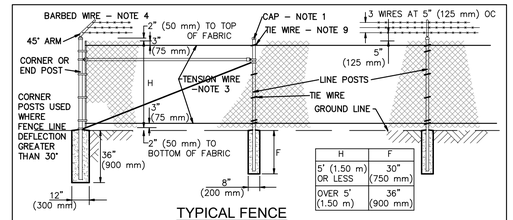

TYPICAL FENCE

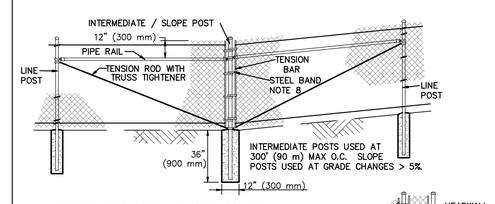

INTERMEDIATE / SLOPE POST

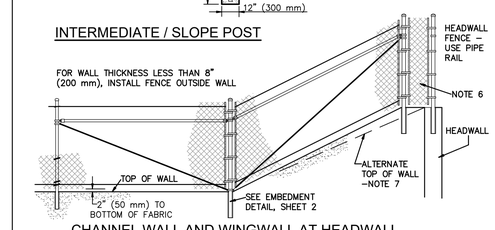

CHANNEL WALL AND WINGWALL AT HEADWALL

STANDARD PLANS FOR PUBLIC WORKS CONSTRUCTION	STANDARD PLAN
CHAIN LINK FENCE AND GATES USE WITH STANDARD SPECIFICATIONS FOR PUBLIC WORKS CONSTRUCTION	600-3 SHEET 1 OF 3

15 14 TYPICAL CHAIN LINK FENCE AND GATES

NOT TO SCALE

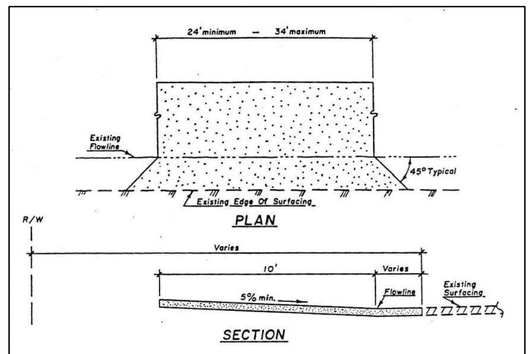

NOTES:

1. Driveway Approach Location Shall Be As Indicated In The S.B. Co. Transportation Department Road Planning & Design Manual And Per Standard Nº 130.
2. Surfacing Material Shall Be:
   a. Type B Asphalt Concrete Grade AR-4000, 1/2" Max. Med., 3" Thick.
   b. In Areas Not Regularly Subjected To Snowplowing, Portland Cement Concrete Class B 6" Thick May Be Used.
   * c. Unpaved, If The Roadway Is Unpaved.
3. Flowline Grade Shall Be Maintained.
4. Where Existing Berm is Removed, The Approach Shall Be Constructed To An Elevation Equal In Height To Control Drainage.

* 10" Thick

SAN BERNARDINO COUNTY TRANS. DEPT.		
REV. 3/1/99	KEN A. MILLER Director of Transportation	COMMERCIAL DRIVEWAY APPROACH WITHOUT CURB
		129a

10 DRIVEWAY APPROACH

NOT TO SCALE

COUNTY OF SAN BERNARDINO

ARCHITECTURE & ENGINEERING DEPARTMENT

385 NORTH ARROWHEAD AVENUE
SAN BERNARDINO, CA 92415-0184

Project Title:
BAKER FUEL SITE

CIP NUMBER:

Project No:
2SAN020200

Project Address:
Fire Station 53
72734 Baker Blvd. Baker CA 92309

PSOMAS
3 Hutton Centre Drive
Suite 200
Santa Ana, CA 92707
(714) 751-7373 Fax(714) 545-8883

REGISTERED PROFESSIONAL ENGINEER ROBERT J. TALAVERA No. 38832 CIVIL STATE OF CALIFORNIA

No.	REVISION	DATE

Drawing Title:
PRECISE GRADING PLAN

SITE DETAILS

Revision Date:	
Scale:	
Drawn By:	MS
Reviewd By:	HN
Date:	12/18/19
Drawing Size:	24 x 36

Drawing Number
2.14
08 of 11 Sheets

100% CONSTRUCTION DOCUMENTS

Dec 16, 2019 – 7:47AM – M:\2SAN020200\ENGR\SHEETS\BAKER FUEL SITE LAYOUT PLAN\PL-BAKER_04-08 DET.DWG

ELECTRICAL ABBREVIATIONS

@	AT
A	AMPERES
ABV	ABOVE
A/C	AIR CONDITIONING
AF	AMP FUSE OR AMP FRAME
AFC	AVAILABLE FAULT CURRENT (SYMMETRICAL)
A.F.F.	ABOVE FINISHED FLOOR
ARCH.	ARCHITECT
AS	AMP SWITCH
AT	AMP TRIP
ATS	AUTOMATIC TRANSFER SWITCH
AUTO	AUTOMATIC
BKBD	BACKBOARD
C	CONDUIT
CAP.	CAPACITY
CATV	COMMUNITY ANTENNA TELEVISION
CB	CIRCUIT BREAKER
CCTV	CLOSED CIRCUIT TELEVISION
C.I.	CAST IRON
CKT	CIRCUIT
CLG.	CEILING
CLR.	CLEAR
C.O.	CONDUIT ONLY
COMPR.	COMPRESSOR
CONC.	CONCRETE
CONDR.	CONDENSER
CONN.	CONNECT OR CONNECTION
CONT.	CONTINUED/CONTINUATION
C.W.	COLD WATER
D	DEPTH
DET.	DETAIL
DIA.	DIAMETER
DISC.	DISCONNECT
DN	DOWN
DWG	DRAWING
EA	EACH
EDF	ELECTRIC DRINKING FOUNTAIN
ELEC	ELECTRIC OR ELECTRICAL
ELEV	ELEVATION OR ELEVATOR
EMERG.	EMERGENCY
EQUIP.	EQUIPMENT
EXIST.	EXISTING
EXT.	EXTERIOR
FA	FIRE ALARM
FDR.	FEEDER
FIXT.	FIXTURE
FLA	FULL LOAD AMPERES
FLR	FLOOR
FLUOR.	FLUORESCENT
GALV.	GALVANIZED
GEN	GENERATOR
GFCI	GROUND FAULT CIRCUIT INTERRUPTER
GFI	GROUND FAULT INTERRUPTER
GND	GROUND
H	HIGH OR HEIGHT
HORIZ.	HORIZONTAL
HP	HORSEPOWER
HTR	HEATER
HVAC	HEATING, VENTILATING AND AIR CONDITIONING
I.C.	INTERCOM
I.G.	ISOLATED GROUND
INCAND.	INCANDESCENT
IND.	INDICATED
INT.	INTERIOR
JB	JUNCTION BOX
KVA	KILOVOLT AMPERES
KW	KILOWATT
KWH	KILOWATT HOUR
L	LENGTH
LCL	LONG CONTINUOUS LOAD
LOC.	LOCATION
LTG	LIGHTING
L.V.	LOW VOLTAGE
MAC	MALL AIR CONDITIONING
MAX	MAXIMUM
MCC	MOTOR CONTROL CENTER
MECH	MECHANICAL
MFR.	MANUFACTURER
MH	MANHOLE
MIN	MINIMUM OR MINUTES
MTD	MOUNTED
MTG	MOUNTING
MTG. HT.	MOUNTING HEIGHT
NA	NOT APPLICABLE
N/A	NON-AUTOMATIC
NF	NON FUSIBLE
N.L.	NIGHT LIGHT
NTS	NOT TO SCALE
OL	OVERLOADS
P	POLE
PA	PUBLIC ADDRESS
PB	PULLBOX
P.C.	PHOTOCELL
PNL	PANEL
P.O.C.	POINT OF CONNECTION
PR	PAIR
PWR.	POWER
RECEPT	RECEPTACLE
REQ'D	REQUIRED
RM	ROOM
SCHED.	SCHEDULE
SHT	SHEET
SOL	SOLENOID
SPKR	SPEAKER
SQ. FT.	SQUARE FEET
STD.	STANDARD
SURF.	SURFACE
SW.	SWITCH
SWBD	SWITCHBOARD
SYS.	SYSTEM
TAC	TENANT AIR CONDITIONING
TEL	TELEPHONE
TEMP.	TEMPORARY OR TEMPERATURE
TRANSF.	TRANSFORMER
TTB	TELEPHONE TERMINAL BACKBOARD
TV	TELEVISION
TYP	TYPICAL
U.G.	UNDERGROUND
U.O.N.	UNLESS OTHERWISE NOTED
V	VOLT
VA	VOLT AMPERES
V.D.	VOLTAGE DROP
VERT.	VERTICAL
W	WATTS OR WIRE OR WIDE
W/	WITH
W/O	WITHOUT
W.P.	WEATHERPROOF

INSTALL EQUIPMENT GREEN GROUNDING CONDUCTOR, SIZED PER N.E.C. 250-122 IN ALL CONDUITS. GROUND WIRES ARE NOT SHOWN ON DRAWINGS OR IN SYMBOL LIST.

POWER AND WIRING DISTRIBUTION

BRANCH CIRCUIT PANELBOARD

SWITCHBOARDS, DISTRIBUTION PANELBOARD OR MOTOR CONTROL CENTER

T — TRANSFORMER, SIZE AS INDICATED ON PLAN

CONDUIT RUN CONCEALED IN CEILING OR WALL (SEE SPECIAL SYSTEMS AND DEFINITION SYMBOLS FOR RACEWAY CODING)

CONDUIT RUN EXPOSED

CONDUIT RUN BELOW FLOOR SLAB OR GRADE

#10 — HASH MARKS INDICATE THE QUANTITY OF CONDUCTORS REQUIRED. UNLESS OTHERWISE NOTED, NO HASH MARKS INDICATE 2 #12 AWG (#10 AWG CONDUCTORS INDICATED). WHERE A NUMBER IS NOT INDICATED, THE CONDUCTORS ARE #12 AWG (MIN).

CONDUIT SIZE SHALL BE AS FOLLOWS:

	CONDUCTORS		
MIN. RACEWAY SIZE	12	10	8
THREE-QUARTER INCH (MIN)	1 to 6	1 to 6	1 to 3
ONE INCH	9 to 13	7 to 11	4 to 5

*QUANTITY OF CONDUCTORS AS INDICATED (TYP.)

2LA-1,3,5,7 — INDICATES A HOMERUN TO PANEL 2LA, CIRCUITS 1-3-5 WITH SHARED NEUTRAL AND CIRCUIT 7 WITH DEDICATED NEUTRAL

FLEXIBLE CONDUIT

CABLE OR CORD
ARROW INDICATES A PLUG-IN CONNECTION

G — GROUND CONDUCTOR

NOTES: 1) MOUNTING HEIGHTS NOTED ARE DISTANCES MEASURED FROM THE DEVICE CENTERLINE TO THE FINISH FLOOR OR FINISH GRADE, UNLESS OTHERWISE NOTED.

(1) 2) CIRCLE WITH A NUMBER INSIDE REFERS TO A SPECIAL NOTE ON THE DRAWING WHERE IT IS INDICATED.

CONDUIT BEND UP TOWARD OBSERVER

CONDUIT BEND DOWN AWAY FROM OBSERVER

SURFACE MOUNTED SWITCHES

WITH MOUNTING HEIGHT +46" (U.O.N.)

DISCONNECT SWITCH WITH OVERCURRENT PROTECTION.
SIZE AS REQUIRED BY EQUIPMENT MANUFACTURER. U.O.N.

COMBINATION MOTOR STARTER-DISCONNECT DEVICE, WITH OVERCURRENT PROTECTION UNLESS OTHERWISE NOTED

MAGNETIC MOTOR STARTER.

S m — MANUAL MOTOR SWITCH WITH THERMAL OVERLOAD PROTECTION.

S T — MOTOR RATED TOGGLE DISCONNECT SWITCH.

GENERAL POWER OUTLETS

EP — SURFACE MOUNTED JUNCTION BOX, EP INDICATE EXPLOSION PROOF

EP — ABOVE GROUND JUNCTION BOX 12" ABOVE FINISH FLOOR, EP INDICATE EXPLOSION PROOF.

N.E.C. HAZARDOUS AREA NOTES:

1. TYPICAL N.E.C. ARTICLE 514 CLASS 1 LOCATION (UNDERGROUND TANK – FILL OPENING) EXTENT OF CLASS 1, GROUP D, DIVISION 1 LOCATION:
ANY PIT, BOX OR SPACE BELOW GRADE LEVEL, ANY PART OF WHICH IS WITHIN THE DIVISION 1 OR 2 CLASSIFIED LOCATION. EXTENT OF CLASS 1, GROUP D, DIVISION 2 LOCATION:
UP TO 18 INCHES ABOVE GRADE LEVEL WITHIN A HORIZONTAL RADIUS OF 10 FEET FROM A LOOSE FILL CONNECTION AND WITHIN A HORIZONTAL RADIUS OF 5 FEET FROM A TIGHT FILL CONNECTION.

2. TYPICAL N.E.C. ARTICLE 514 CLASS 1 LOCATION (UNDERGROUND TANK – VENT–DISCHARGE UPWARD) EXTENT OF CLASS 1, GROUP D, DIVISION 1 LOCATION:
WITHIN 3 FEET OF OPEN END OF VENT, EXTENDING IN ALL DIRECTIONS. EXTENT OF CLASS 1, GROUP D, DIVISION 2 LOCATION:
SPACE BETWEEN 3 FEET AND 5 FEET OF OPEN END OF VENT, EXTENDING IN ALL DIRECTIONS.

3. TYPICAL N.E.C. ARTICLE 514 CLASS 1 LOCATION (REMOTE PUMP – OUTDOOR) EXTENT OF CLASS 1, GROUP D, DIVISION 1 LOCATION:
ANY PIT, BOX, OR SPACE BELOW GRADE LEVEL, ANY PART OF WHICH IS WITHIN THE DIVISION 1 OR 2 CLASSIFIED LOCATION. EXTENT OF CLASS 1, GROUP D, DIVISION 2 LOCATION:
WITHIN 3 FEET OF ANY EDGE OF PUMP, EXTENDING IN ALL DIRECTIONS. ALSO UP TO 18 INCHES ABOVE GRADE LEVEL WITHIN 10 FEET HORIZONTALLY FROM ANY EDGE OF PUMP.

4. TYPICAL N.E.C. ARTICLE 514 CLASS 1 LOCATION (DISPENSING DEVICE – PITS) EXTENT OF CLASS 1, GROUP D, DIVISION 1 LOCATION:
ANY PIT, BOX, OR SPACE BELOW GRADE LEVEL, ANY PART OF WHICH IS WITHIN THE DIVISION 1 OR 2 CLASSIFIED LOCATION.

5. TYPICAL N.E.C. ARTICLE 514 CLASS 1 LOCATION (DISPENSING DEVICE – DISPENSER) EXTENT OF CLASS 1, GROUP D, DIVISION 2 LOCATION:
WITHIN 18 INCHES HORIZONTALLY IN ALL DIRECTIONS EXTENDING TO GRADE FROM (1) THE DISPENSER ENCLOSURE OR (2) THAT PORTION OF THE DISPENSER ENCLOSURE CONTAINING LIQUID HANDLING COMPONENTS.

6. TYPICAL N.E.C. ARTICLE 514 CLASS 1 LOCATION (DISPENSING DEVICE – OUTDOOR) EXTENT OF CLASS 1, GROUP D, DIVISION 2 LOCATION:
UP TO 18 INCHES ABOVE GRADE LEVEL WITHIN 20 FEET HORIZONTALLY OF ANY EDGE OF ENCLOSURE.

7. TYPICAL N.E.C. ARTICLE 514 CLASS 1 LOCATION (DISPENSING DEVICE – OUTDOOR) EXTENT OF CLASS 1, GROUP D, DIVISION 1 LOCATION:
VAPOR PROCESSING SYSTEM PITS ANY PIT OR BOX BELOW GRADE LEVEL, ANY PART OF WHICH IS WITHIN A DIVISION 1 OR DIVISION 2 CLASSIFIED LOCATION OR THAT HOUSES ANY EQUIPMENT USED TO TRANSPORT OR PROCESS VAPORS.

8. TYPICAL N.E.C. ARTICLE 514 CLASS 1 LOCATION (DISPENSING DEVICE – OUTDOOR) EXTENT OF CLASS 1, GROUP D, DIVISION 2 LOCATION:
VAPOR PROCESSING EQUIPMENT LOCATED WITHIN PROTECTIVE ENCLOSURES WITHIN ANY PROTECTIVE ENCLOSURE HOUSING VAPOR PROCESSING EQUIPMENT.

9. TYPICAL N.E.C. ARTICLE 514 CLASS 1 LOCATION (DISPENSING DEVICE – DISPENSER) EXTENT OF CLASS 1, GROUP D, DIVISION 1 LOCATION:
SPACE CLASSIFICATION INSIDE THE DISPENSER ENCLOSURE IS COVERED IN ANSI/UL 87, "POWER OPERATED DISPENSING DEVICES FOR PETROLEUM PRODUCTS."

GENERAL NOTES:

1. ALL MATERIALS AND EQUIPMENT SHALL BE NEW AND SHALL BEAR THE UNDERWRITERS' LABEL (UL) AND SHALL BE INSTALLED IN THE MANNER FOR WHICH THEY ARE DESIGNED AND APPROVED.
2. ALL DEVICES INSTALLED OUTSIDE OR IN DAMP LOCATIONS SHALL BE APPROVED WEATHERPROOF.
3. ALL WIRE SHALL BE COPPER. ALL WIRE SHALL BE UL LISTED, RATED FOR 600 VOLTS, TYPE THHN/THWN INSULATION, NO. 12 MINIMUM SIZE EXCEPT FOR CONTROLS.
4. PROVIDE SUPPORT FOR ALL FIXTURES AND ELECTRICAL EQUIPMENT TO COMPLY WITH SEISMIC REQUIREMENTS OF THE CALIFORNIA BUILDING CODE.
5. PROVIDE AN ENCLOSURE OF EQUAL FIRE RESISTANT RATING AROUND ALL FIXTURES AND EQUIPMENT INSTALLED IN OR PENETRATING THROUGH FIRE RATED SEPARATIONS.
6. FOR PURPOSES OF CLEARNESS AND LEGIBILITY, THE ELECTRICAL DRAWINGS ARE ESSENTIALLY DIAGRAMMATIC. THE SIZE AND LOCATION OF EQUIPMENT IS SHOWN TO SCALE WHEREVER POSSIBLE. VERIFY ALL CONDITIONS, DATA INFORMATION AS INDICATED ON THE DRAWINGS AND IN THE SPECIFICATIONS SECTIONS WHERE ELECTRICAL WORK INTERFACES WITH OTHER TRADES.
7. WIRING IN JUNCTION BOXES, USED TO FEED SURFACE MOUNTED FIXTURES, ETC., SHALL BE ACCESSIBLE WITHOUT THE REMOVAL OF FIXTURES.
8. SEE ARCHITECTURAL PLANS FOR EXACT LOCATION OF ALL RECEPTACLES AND SWITCHES.
9. PAY ALL COST ASSOCIATED WITH CONSTRUCTION INCLUDING BONDS, INSURANCE, PERMITS AND INSPECTION FEES.

LIGHTING FIXTURE SCHEDULE

TYPE	SYMBOL (*)	DESCRIPTION	INPUT VA	LAMPS NO.	LAMPS WATTS	LAMPS TYPE	LAMPS VOLT.	MOUNTING	MANUFACTURER & CATALOG NO.	REMARKS
A		20' HIGH LED LIGHT POLE	94	1	94	LED	120	20' STEEL POLE	LITHONIA KAD LED 40C 700 40K R5-MVOLT SPD-PER7-PIRH	MOUNTED 20' ON SQUARE STEEL POLE; WITH PHOTOCELL AND MOTION SENSOR

100% CONSTRUCTION DOCUMENTS

COUNTY OF SAN BERNARDINO

ARCHITECTURE & ENGINEERING DEPARTMENT

385 NORTH ARROWHEAD AVENUE
SAN BERNARDINO, CA 92415-0184

Project Title:
PROJECT 5F15
FLEET MANAGEMENT FUEL TANK REPLACEMENT PROJECT - PHASE I
CIP NUMBER: 15-009

Project No: 4SAN030303

Project Address:
Fire Station 53
72734 Baker Blvd. Baker CA

PSOMAS
3 Hutton Centre Drive
Suite 200
Santa Ana, CA 92707
(714) 751-7373 Fax(714) 545-8883

REGISTERED PROFESSIONAL ENGINEER — CHIN P. CHAN — No. E22794 — 6/30/2021 — ELECTRICAL — STATE OF CALIFORNIA

S&K ENGINEERS
421 East Huntington Drive
Monrovia, California 91016
P: 626.930.1383 F: 626.930.1385
Job No: 18035

No.	REVISION	DATE
	BID DRAWINGS	

Drawing Title:
ELECTRICAL COVER SHEET

BAKER
Fire Station 53

Revision Date:	
Scale:	1" = 40'
Drawn By:	
Reviewd By:	
Date:	12/18/19
Drawing Size:	24 x 36

Drawing Number
E0.01
09 of 11 Sheets

Dec 17, 2019 – 11:07AM – H:\2018\18035 – PSOMAS – SAN BERNARDINO FIRE STATION\SHEET\ELECTRICAL\18035 E0.01.DWG

VOLTAGE 120/208 3Ø, 4W
BUS AMPS 100
MAIN BREAKER ☐ A.F. A.T.
LUGS ONLY ☒

PANEL "A53" (FS #53)

LOCATION YARD
TOP FEED ☐ SURFACE MTG. ☐
BOTTOM FEED ☒ FLUSH MTG. ☒
REMARKS WEATHERPROOF (NEMA 3R)

	DESCRIPTION	VOLT-AMPS A	VOLT-AMPS B	VOLT-AMPS C	LCL	OUTLETS L	OUTLETS R	OUTLETS M	CB	CKT	BUS A B C	CKT	CB	OUTLETS L	OUTLETS R	OUTLETS M	LCL	VOLT-AMPS A	VOLT-AMPS B	VOLT-AMPS C	DESCRIPTION
2 1	LIGHT POLE	100			∘				20A-1P	1		2	20A-1P								SPARE
	SPARE								20A-1P	3		4	20A-1P								SPARE
	NORTH ENTRY GATE			790					20A-2P	5		6	20A-1P								SPARE
	- - -	790							-	7		8	20A-1P								SPARE
	SOUTH ENTRY GATE		790						20A-2P	9		10	20A-1P								SPARE
	- - -			790					-	11		12	20A-1P								SPARE
	SPARE								20A-1P	13		14	20A-1P								SPARE
	CONTROL CIRCUIT		100						20A-1P	15		16	20A-1P								SPARE
	EPO RELAY			100					20A-1P	17		18	20A-1P								SPARE
	SPARE								20A-1P	19		20	20A-1P								
									20A-1P	21		22	20A-1P								
									20A-1P	23		24	20A-1P								
	SPACE								20A-1P	25		26	20A-1P								SPACE
										27		28									
										29		30									
										31		32									
										33		34									
										35		36									
										37		38									
										39		40									
										41		42									
	SUB TOTALS	890	890	1680														0	0	0	SUB TOTALS

CONN. PHASE TOTAL: A 890 B 890 C 1680 CONN. PANEL TOTAL 3460 KVA MAX. CONN. LINE CURRENT 14 AMPS

(KVA) PANEL TOTAL 3.46 + L.C.L. (.25) 0.03 = 3.49 KVA BALANCED CURRENT 10 AMPS DESIGN LOAD ____ KVA

VOLTAGE 120/208 3Ø, 4W
BUS AMPS 125
MAIN BREAKER ☐ A.F. A.T.
LUGS ONLY ☒

PANEL "EM"

LOCATION YARD
TOP FEED ☐ SURFACE MTG. ☒
BOTTOM FEED ☒ FLUSH MTG. ☐
REMARKS AIC RATING: 10,000

	DESCRIPTION	VOLT-AMPS A	VOLT-AMPS B	VOLT-AMPS C	LCL	OUTLETS L	OUTLETS R	OUTLETS M	CB	CKT	BUS A B C	CKT	CB	OUTLETS L	OUTLETS R	OUTLETS M	LCL	VOLT-AMPS A	VOLT-AMPS B	VOLT-AMPS C	DESCRIPTION
	EXISTING GEN. LIGHTING	1593			∘				20A-1P	1		2	20A-1P					300			EXISTING PIV TAMPER SWITCH
	EXISTING GEN. LIGHTING		535		∘				20A-1P	3		4	20A-1P						300		EXISTING FIRE SPRINKLER CT
	EXISTING FUEL PUMP #1			500					20A-2P	5		6	20A-1P							540	EXISTING RECEPTACLES
	---	500							-	7		8	20A-1P					600			EXISTING RADIO/AMPLIFIER
1	UNLEADED PUMP		1660						20A-1P	9		10	20A-1P						100		EXISTING E.F. CTRL PNL.
1	UNLEADED PUMP			1660					20A-1P	11		12	20A-1P							1176	EXISTING DOOR OPENER
	SPARE								20A-1P	13		14	20A-1P					1176			EXISTING DOOR OPENER
	EXISTING GATE		1800						20A-1P	15		16	20A-1P						1176		EXISTING DOOR OPENER
	EXISTING GATE			1800					20A-1P	17		18	20A-1P							1176	EXISTING DOOR OPENER
	EXISTING FREEZER	1200							20A-1P	19		20	20A-1P					900			EXISTING RECEPT.
	EXISTING LTS-ON CALL		280		∘				20A-1P	21		22	20A-1P						720		EXISTING RECEPT.
	EXISTING ICE MACHINE			1200					20A-1P	23		24	20A-1P							900	EXISTING REFRIG.
	EXISTING RECEPTACLE	1080							20A-1P	25		26	20A-1P								SPARE
	EXISTING RECEPTACLE		1080						20A-1P	27		28	20A-1P						500		EXISTING SELECTOR SWITCH RELAYS
	EXISTING RECEPTACLE			1080					20A-1P	29		30	20A-1P							580	UNLEADED DISPERSER
1	EXISTING SMOKE DETECTORS								20A-1P	31		32	20A-1P					580			UNLEADED DISPERSER
	SPARE								20A-1P	33		34	20A-1P								SPARE
	SPARE								20A-1P	35		36	20A-1P								SPARE
	SPARE								20A-1P	37		38	20A-1P								SPARE
	SPARE								20A-1P	39		40	20A-1P								SPARE
	EXISTING LIGHTING			700	∘				20A-1P	41		42	20A-1P								SPARE
	SUB TOTALS	4373	5355	6940														3556	2796	4372	SUB TOTALS

CONN. PHASE TOTAL: A 7929 B 8151 C 11312 CONN. PANEL TOTAL 27392 KVA MAX. CONN. LINE CURRENT 94 AMPS

(KVA) PANEL TOTAL 27.39 + L.C.L. (.25) 0.78 = 28.17 KVA BALANCED CURRENT 78 AMPS DESIGN LOAD ____ KVA

EMERGENCY POWER OFF(SHUTOFF) NOTE

EMERGENCY POWER OFF (SHUTOFF) SWITCH CONTROLS OPERATION OF FUELING CONTROLS EMERGENCY SHUTDOWN. PUSH-BUTTON OPERATOR IN SURFACE MOUNTED NEMA 3R, ENCLOSURE WITH HINGED CLEAR COVER, PROVIDED BY ELECTRICAL CONTRACTOR. (STI-SERIES 2000-RED MANUFACTURED BY STI). ELECTRICAL CONTRACTOR TO PROVIDE NAMEPLATE AT SHUTOFF SWITCH WITH THE INSCRIPTION "EMERGENCY SHUTOFF SWITCH". THE NAMEPLATE WILL BE RED WITH J-BOX FOR AUTOMATIC DOOR. VERIFY LOCATION OF J-BOX WITH DOOR MANUFACTURER.

SYMBOL LEGEND

= EYS EXPLOSION PROOF SEAL-OFF FITTING.

CONDUIT SEAL-OFF FITTING NOTES

IF CONDUIT RUNNING FROM CLASS 1, DIVISION 2 HAZARDOUS AREA TO UNCLASSIFIED AREA, BOTH ENDS SHALL BE EQUIPPED WITH EYS EXPLOSION SEAL-OFF FITTING. NO EXCEPTION.

GENERAL NOTES

ALL UNDERGROUND SITE WORK CONDUIT TO BE BURIED MINIMUM 24" BELOW FINISH GRADE AND USE MIN 3/4" CONDUIT U.O.N.

CONDUIT ROUTING IS SHOWN DIAGRAMMATICALLY IN NATURE AND IS NOT INTENDED TO SHOW EXACT CONDUIT ROUTING. THE ELECTRICAL CONTRACTOR SHALL DETERMINE, IN THE FIELD, THE BEST ROUTING TO AVOID ANY INTERFERENCE WITH UNDERGROUND UTILITIES OR OTHER EQUIPMENT. THE ELECTRICAL CONTRACTOR SHALL FOLLOW MANUFACTURERS RECOMMENDATIONS FOR INSTALLATION AND TERMINATION OF CONDUIT AND WIRING.

ALL UNDERGROUND CONDUITS FROM HAZARDOUS AREAS ENTERING THE BUILDING TO BE PROVIDED WITH EYS SEAL-OFFS AT POINTS OF ORIGIN AS WELL AS POINTS OF TERMINATION, AND SHALL BE LABELED WITH A METAL TAG AS TO THEIR ORIGIN.

ALL RIGID GALVANIZED STEEL (RGS) CONDUIT DIRECTLY BURIED IN GROUND SHALL BE PVC COATED. NO EXCEPTIONS.

KEY NOTES

1. IP CIRCUIT BREAKER WITH SWITCHED NEUTRAL. RUN DEDICATED NEUTRAL
2. CONTROL VIA 2P RELAY (SWITCH NEUTRAL) AND PHOTOCELL IN SEPARATE COMPARTMENT.
3. UNDERGROUND SAFETY LOOP SENSORS
4. UNDERGROUND EXIT LOOP SENSOR.
5. GATE OPERATOR DEVICES & MATERIALS PROVIDED WITH THE UNIT. INSTALL PER TYPICAL SLIDING GATE LAYOUT PER CIVIL DRAWING NUMBER 2.14, SHEET 8.
6. NOT USED.
7. GATE OPERATOR REMOTE KEY PAD CONTROL.
8. 1" CONDUIT FOR DATA CONTROL CABLING BY OTHERS. VERIFY CABLING WITH GATE OPERATOR SUPPLIER.
9. POWER AND CONTROL J-BOXES FOR GATE OPERATORS, WITH INTEGRAL DISCONNECT SWITCHES.

40' 20' 0' 40' 80'
GRAPHIC SCALE
Note: For reduced sized prints, original scale is in inches

100% CONSTRUCTION DOCUMENTS

COUNTY OF SAN BERNARDINO

ARCHITECTURE & ENGINEERING DEPARTMENT

385 NORTH ARROWHEAD AVENUE
SAN BERNARDINO, CA 92415-0184

Project Title:
PROJECT 5F15
FLEET MANAGEMENT FUEL TANK REPLACEMENT PROJECT - PHASE I
CIP NUMBER: 15-009

Project No: 4SAN030303

Project Address:
Fire Station 53
72734 Baker Blvd. Baker CA

PSOMAS
3 Hutton Centre Drive
Suite 200
Santa Ana, CA 92707
(714) 751-7373 Fax(714) 545-8883

REGISTERED PROFESSIONAL ENGINEER CHIN P. CHAN C 22794 12/31/2021 ELECTRICAL STATE OF CALIFORNIA

S&K ENGINEERS
421 East Huntington Drive
Monrovia, California 91016
P: 626.930.1383 F: 626.930.1385

Job No: 18035

No.	REVISION	DATE
	BID DRAWINGS	

Drawing Title:
CONCEPTUAL SITE LAYOUT PLAN

BAKER
Fire Station 53

Revision Date:	
Scale:	1" = 40'
Drawn By:	
Reviewd By:	
Date:	12/18/19
Drawing Size:	24 x 36

Drawing Number
E1.00
10 of 11 Sheets

Dec 17, 2019 - 10:43AM - H:\2018\18035 - PSOMAS - SAN BERNARDINO FIRE STATION\SHEET\ELECTRICAL\18035 E1.00.DWG

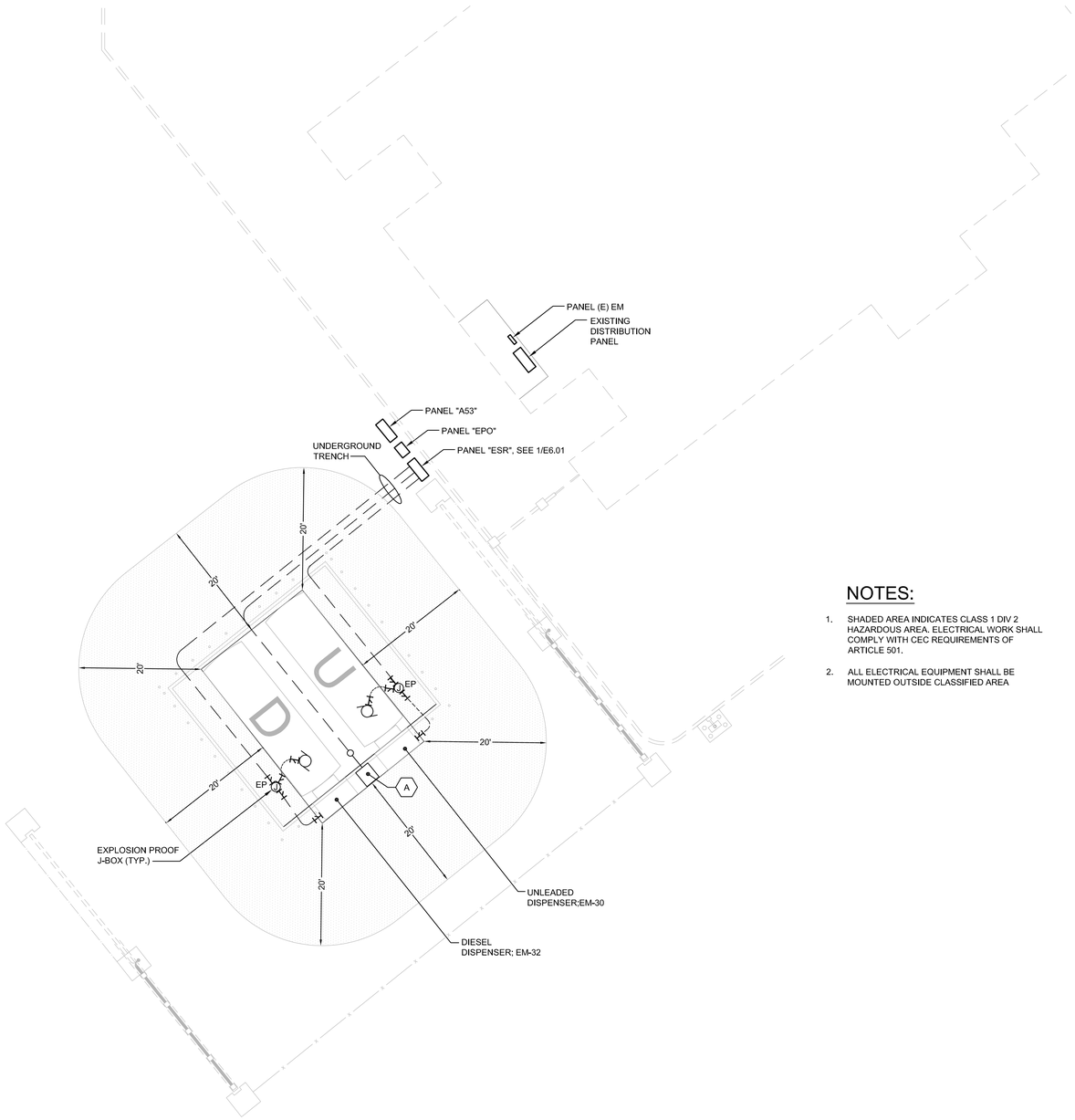

NOTES:

1. SHADED AREA INDICATES CLASS 1 DIV 2 HAZARDOUS AREA. ELECTRICAL WORK SHALL COMPLY WITH CEC REQUIREMENTS OF ARTICLE 501.
2. ALL ELECTRICAL EQUIPMENT SHALL BE MOUNTED OUTSIDE CLASSIFIED AREA

TYPICAL DISPENSER FUEL TANK AREA | SCALE 3/32" = 1'-0" | 4

KEY NOTES

1. 4#2, 1#6G, 1-1/2"C, L=60', V.D=0.4%.
2. PROVIDE NEW FEEDER BREAKER IN EXISTING SPACE. NEW BREAKER SHALL BE COMPATIBLE FOR USE WITH EXISTING DISTRIBUTION BOARD.

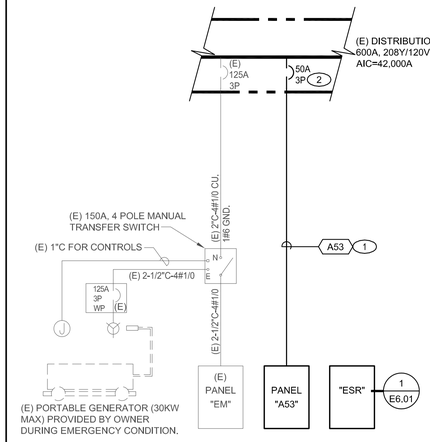

LOAD SUMMARY @ "MS"	
PANEL "A"	35 KVA
PANEL "A1"	32 KVA
PANEL "B"	10 KVA
PANEL "EM"	28.2 KVA
WASHER EXTR.	1.5 KVA
AIR COMP C-1	6 KVA
EXH. FAN EF-7	8.7 KVA
EC-1 & EC-2	1.5 KVA
SUBTOTAL	122.9 KVA
25% EXISTING LOAD	30.8 KVA
A53	3.5 KVA
TOTAL LOAD @120/208V, 3Ø, 4W	157.2 KVA 437 AMP

FS 53 BAKER - PARTIAL SINGLE LINE DIAGRAM | SCALE NONE | 3

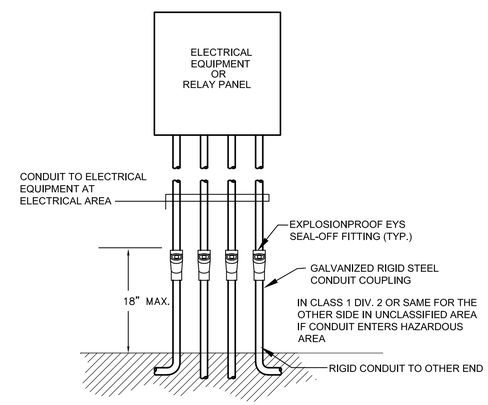

EXPLOSION PROOF SEAL-OFF STUB-UP TO ELECTRICAL ELEVATION DETAIL | SCALE NONE | 2

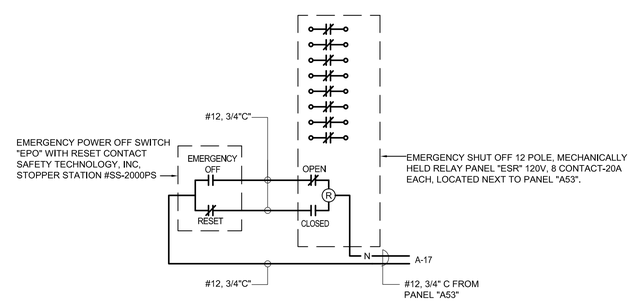

EMERGENCY SHUT OFF RELAY "ESR" | SCALE NONE | 1

100% CONSTRUCTION DOCUMENTS

COUNTY OF SAN BERNARDINO

ARCHITECTURE & ENGINEERING DEPARTMENT

385 NORTH ARROWHEAD AVENUE
SAN BERNARDINO, CA 92415-0184

Project Title:
PROJECT 5F15
FLEET MANAGEMENT FUEL TANK REPLACEMENT PROJECT - PHASE I
CIP NUMBER: 15-009

Project No: 4SAN030303

Project Address:
Fire Station 53
72734 Baker Blvd. Baker CA

PSOMAS
3 Hutton Centre Drive
Suite 200
Santa Ana, CA 92707
(714) 751-7373 Fax(714) 545-8883

REGISTERED PROFESSIONAL ENGINEER CHIN P. CHAN No. E22794 6/30/2021 ELECTRICAL STATE OF CALIFORNIA

S&K ENGINEERS
421 East Huntington Drive
Monrovia, California 91016
P: 626.930.1383 F: 626.930.1385
Job No: 18035

No.	REVISION	DATE
	BID DRAWINGS	

Drawing Title:
ELECTRICAL DETAILS

BAKER
Fire Station 53

Revision Date:	
Scale:	1" = 40'
Drawn By:	
Reviewd By:	
Date:	12/18/19
Drawing Size:	24 x 36

Drawing Number
E6.01
11 of 11 Sheets

Dec 17, 2019 - 10:55AM - H:\2018\18035 - PSOMAS - SAN BERNARDINO FIRE STATION\SHEET\ELECTRICAL\18035 E6.01.DWG